FM 3-34.343 (FM5-446)

Military Nonstandard Fixed Bridging

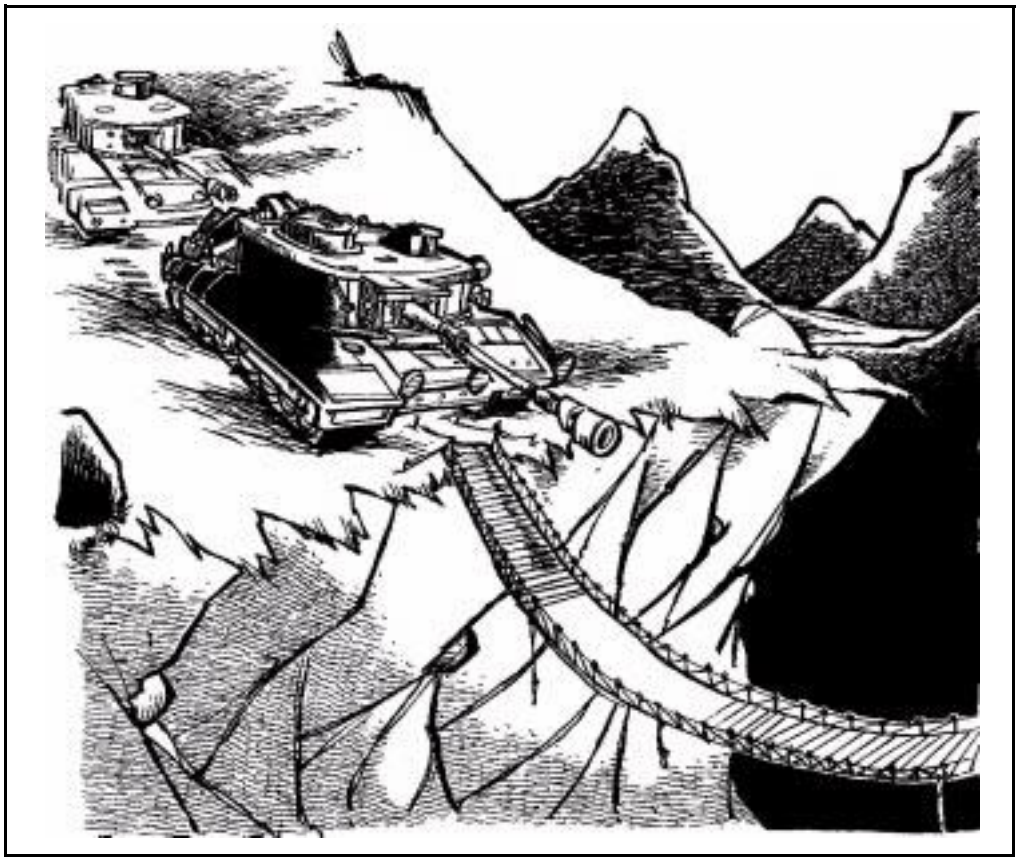

HEADQUARTERS, DEPARTMENT OF THE ARMY

DISTRIBUTION RESTRICTION: Approved for public relase; distribution is unlimited.

***FM 3-34.343** (FM 5-446)

Field Manual
No. 3-34.343

Headquarters
Department of the Army
Washington, DC, 12 February 2002

Military Nonstandard Fixed Bridging

Contents

Page

PREFACE vii

PART ONE BASIC CONSIDERATIONS

Chapter 1 BACKGROUND INFORMATION 1-1
General Concepts 1-2
Bridge Design 1-4
Army Facilities Components System 1-4
Classification Information 1-5
Engineer Responsibilities 1-6
Supporting Information 1-6

Chapter 2 RECONNAISSANCE AND PRELIMINARY INVESTIGATIONS 2-1
Hasty Reconnaissance 2-1
Deliberate Reconnaissance 2-1
Repair or Reconstruction 2-1
New-Bridge Construction 2-2
Site Requirements 2-3
Survey Control 2-6
Survey Drawings 2-6

PART TWO CLASSIFICATION, REINFORCEMENT AND REPAIR, AND POSTING

Chapter 3 CLASSIFICATION 3-1
Section I - Bridge-Classification Considerations 3-2
Section II - Expedient Classification 3-2

DISTRIBUTION RESTRICTION: Approved for public release; distribution is unlimited.

*This publication supersedes FM 5-446, 3 June 1991..

Page

Hasty Method 3-2
Track Commander's Bridge-Crossing Booklet 3-3
Section III - Correlation-Curve Classification 3-3
Correlation-Curve Applications 3-8
Bridge Condition 3-8
Span Length 3-8
Correlation-Curve Uses 3-9
Section IV - Analytical Bridge Classification 3-10
Classification Assumptions 3-10
Moment Classification for Simple Spans 3-15
Moment Classification for Continuous Spans 3-16
Roadway-Width Classification and Clearance Restrictions 3-18
Solid-Sawn and Glue-Laminated Timber-Stringer Bridges 3-18
Steel-Stringer Bridges 3-22
Composite-Stringer Bridges 3-26
Steel-Girder Bridges 3-29
Truss Bridges 3-46
Reinforced Concrete Slab Bridges 3-55
Reinforced Concrete T-Beam Bridges 3-59
Reinforced Concrete Box-Girder Bridges 3-64
Prestressed Concrete Bridges 3-65
Arch Bridges 3-74
Movable Bridges 3-81
Suspension Bridges 3-82
Other Bridges 3-83

Chapter 4 REINFORCEMENT AND REPAIR 4-1
Basic Considerations 4-1
Hasty or Emergency Repairs 4-4
Stringer Supports 4-7
Stringer Reinforcement 4-9
Steel Floor-Beam Reinforcement 4-11
Truss Reinforcement and Repair 4-11
Flooring Repair 4-17
Masonry-Pier and -Abutment Repair 4-18
Masonry-Arch-Bridge Repair 4-20

Chapter 5 POSTING 5-1
Bridge-Classification Signs 5-1
Traffic Controls 5-5

Page

PART THREE DESIGN

Chapter 6 BRIDGE SUPERSTRUCTURES 6-1
Design Phases 6-1
Design Sequence 6-1

Chapter 7 SUBSTRUCTURE DESIGN 7-1
Abutment Design Procedure 7-1
Abutment Designs 7-12
Intermediate-Support Design 7-34

Chapter 8 SUSPENSION-BRIDGE DESIGN 8-1
Descriptions 8-1
Bridge Sites 8-2
Design Factors 8-3
Live Load 8-4
Panels 8-4
Suspenders 8-8
Main Cables 8-9
Backstays 8-13
Towers 8-13
Anchorages 8-16

Chapter 9 CONNECTIONS 9-1
Timber Connections 9-1
Steel Connections 9-9

Chapter 10 CONSTRUCTION 10-1
Planning Process 10-1
Material Preparation, Timber Framing 10-9
Material Preparation, Steel Fabrication 10-9
Safety 10-11
Erection-Equipment Capacity 10-12
Special Equipment 10-13
Truck- and Crawler-Mounted Cranes 10-13
Derricks 10-14
Cableways 10-14
Hoists 10-14
Jacks 10-14
Falsework 10-15
Erection-Equipment Techniques 10-15

Page

Derrick Elevation 10-19
Special Launching Methods (Steel Erection) 10-22
Precautions 10-27
Suspension-Bridge Construction 10-29

Chapter 11 INSPECTION AND MAINTENANCE 11-1
Inspection 11-1
Maintenance 11-5

Chapter 12 BRIDGING IN ARCTIC AND SUBARCTIC ENVIRONMENTS 12-1
Permafrost 12-1
Transportation 12-2
Thaw Effects 12-3
Explosives 12-3
Steel 12-4
Wood 12-4
Concrete 12-4
Engineer Equipment 12-4
Construction Schedules 12-4
Bridge Foundations and Substructures 12-4
Native Materials 12-6
Foundation Survey 12-7
Intermediate Supports 12-8
Abutments 12-10
Ice Removal 12-12
Superstructure Principles 12-14
Panel-Truss Bridges 12-14
Timber-Truss Bridges 12-14
Steel-Truss Bridges 12-14
Fords 12-14
Ice Crossings 12-16
Expedient Ice-Bridge Construction 12-18
Expedient Ice-Bridge Reinforcement and Repair 12-19

Appendix A CONVERSION CHARTS A-1

Appendix B VEHICLE CLASSIFICATION B-1
Hypothetical Vehicles B-1
Standard Classification Curves B-14
Analytical Classification Procedure B-14

Page

Expedient Classification Procedure B-20
Vehicle-Classification Signs B-20

Appendix C TIMBER PROPERTIES C-1
Civilian-Design Stress C-1
Military-Design Stress C-1

Appendix D STEEL PROPERTIES D-1
All-Purpose Steel D-1
High-Strength, Low-Alloy Steel D-1
Quench- and Tempered-Alloy Steel D-1
Steel Strengths D-2
Structural Shapes D-2
Unlisted-Beams Section Properties D-12

Appendix E STRUCTURAL MECHANICS E-1
Dead, Live, and Impact Loads E-1
Stresses E-1
Static Equilibrium E-6
Internal Reactions E-8
Shear and Moment Diagrams E-10

Appendix F CLASSIFICATION EXAMPLES F-1
Notations F-1
Timber-Stringer Bridge F-4
Steel-Stringer Bridge F-8
Composite Steel-Concrete Stringer Bridge F-11
Steel-Girder Bridge F-17
Truss Bridge F-24
Reinforced Concrete-Slab Bridge F-31
Reinforced Concrete T-Beam Bridge F-35
Reinforced Concrete-Box-Girder Bridge F-39
Prestressed Concrete Bridge F-43
Masonry-Arch Bridge F-48

Appendix G CONCRETE PROPERTIES G-1
General Properties G-1
Cement Types G-2
Mass-Concrete Structures G-4
Steel-Reinforced Concrete G-4

Page

Appendix H SOIL PROPERTIES H-1

Appendix I SUPERSTRUCTURE DESIGN EXAMPLES I-1

Notations I-1

Timber-Stringer Superstructure with a Timber Deck I-3

Steel-Stringer Superstructure with a Concrete Deck I-9

Glossary Glossary-1

Bibliography Bibliography-1

Index Index-1

Preface

This manual provides essential technical information on nonstandard fixed bridges for engineer staff officers. It is the doctrinal source of information for the United States (US) Army on the North Atlantic Treaty Organization (NATO) Bridge and Vehicle Classification System. This manual also provides various methods for classifying and designing nonstandard fixed bridges in military theaters of operation (TOs).

This manual provides detailed technical data on the classification (analysis) and design of bridges. It is NOT intended to replace civilian classification or analysis codes and procedures and should NOT be used for civilian construction or classification. Engineer officers should note that the methods shown in this manual are for conservative classification and design. Qualified engineers also might use appropriate civilian methods for military classification and design.

Appendix A contains an English-to-metric measurement conversion chart.

The proponent for this publication is HQ TRADOC. Send comments and recommendations on *Department of the Army (DA) Form 2028* directly to the US Army Engineer School (USAES), Attention: ATSE-DOT-DD, Directorate of Training, 320 Maneuver Support Center (MANSCEN) Loop, Suite 336, Fort Leonard Wood, Missouri 65473-8929.

The provisions of this publication are the subject of the following international standardization agreements (STANAGs) and Quadripartite STANAG (QSTAG): *STANAG 2010 Engineer (ENGR) (Edition 5), STANAG 2021 ENGR (Edition 5), STANAG 2101 Land Force Tactical Doctrine and Operational Procedures (TOP) (Edition 10),* and *QSTAG 180 (Edition 4).*

Unless this publication states otherwise, masculine nouns and pronouns do not refer exclusively to men.

This publication contains copyrighted material.

Page

PART ONE

Basic Considerations

A bridge is a structure that is erected over obstacles such as a river or other watercourse, a chasm, or a railroad to make a passageway from one bank to the other. A bridge is usually constructed of wood, stone, brick, concrete, steel, or iron. This book identifies methods and procedures for performing bridge reconnaissance, vehicle and bridge classification, and analytical design of superstructures and substructures; constructing bridge connections; and repairing or reinforcing existing bridges.

Reconnaissance is critical to any military operation and for analyzing existing and potential bridge sites. Information must be gathered for bridge use and construction that might normally be overlooked. The engineer and reconnaissance elements must be knowledgeable and prepared for the mission. Proper vehicle and bridge classification is also an important engineer responsibility that helps keep lines of communication (LOC) through the preservation of existing bridges in the TOs.

The purpose of bridge reconnaissance is to collect data that is necessary to support operational planning and movement. Existing bridges are inspected to determine their load-carrying capacity and the requirement for repair and reinforcement. The alternatives might revolve around the erection of a new semipermanent bridge or the repair of a damaged permanent structure. When a demolished bridge is to be replaced, reconnaissance should include a report of the serviceability of structural members and accessories, which might be useful for the contemplated construction.

This chapter implements STANAGs 2010 (Edition 5) and 2021 (Edition 5) and QSTAG 180 (Edition 4).

Chapter 1

Background Information

Rapid movement on the battlefield requires existing road networks or natural high-speed avenues that cross an assortment of wet and dry gaps. Many existing bridges in the TOs will adequately support military loads and only need to be classified for safe use. Gap crossings might be needed where none currently exist. Reinforcing or repairing a bridge can serve tactical purposes; however, mobility of the force is the key issue.

GENERAL CONCEPTS

1-1. To maintain a high momentum, the forces must use bridges in the order discussed below. Each method has specific benefits.

EXISTING BRIDGES, INTACT

1-2. Engineers should first consider the bridges in the TO that do not need repair. Engineers must classify them for military use before using. The classification depends on the type of construction (concrete, steel, timber, or suspension) and the bridge's intended use. The bridge and vehicle classification systems established by *STANAGs 2010* and *2021* and *QSTAG 180* permit the use of bridges at their maximum safe military capacities. The classification systems relate bridge capacity to the overall loading effect a vehicle might impose on a bridge. The classification systems—

- Protect existing bridges from overload and subsequent damage or failure.
- Prevent loss or damage of equipment and costly time-consuming delays due to bridge failure.

DETOURS AND BYPASSES

1-3. Engineers should consider detours and bypasses after analyzing the existing bridges. The assumption is that finding and using detours and bypasses is quicker than reinforcing or repairing existing bridges. The engineer commander will determine the best alternative. Road and approach conditions (along with detours and bypasses) are important considerations. The work necessary to make the roads usable might outweigh the advantages of a detour or bypass. Traffic-supporting properties, grade and alignment, and sharp curves or corners involving clearances are also important considerations. Usually, detours and bypasses are—

- Alternate routes over undamaged bridges.
- Alternate routes over minimally damaged bridges.
- Alternate highway routes over railroad bridges.
- A grade crossing around an overpass.
- Fords.
- Local ferries, rafts, or barges.
- Ice bridges.

EXISTING BRIDGES, REINFORCED OR REPAIRED

1-4. The third consideration is to reinforce or repair existing bridges. Frequently, military load-carrying requirements will necessitate this action.

TACTICAL BRIDGES

1-5. The fourth consideration is tactical bridges, which are generally used in an assault and provide a rapid means of crossing gaps. The bridges' assets are temporary, and advancing forces should remove and carry the bridges forward as they advance. Sustained mobility of forces and logistical support depend on

the tactical bridges, which support existing permanent bridges. Standard, tactical bridges are discussed below.

Armored Vehicle-Launched Bridge

1-6. The armored vehicle-launched bridge (AVLB) can carry military-load-classification (MLC) 70 traffic over a 48-foot-wide gap and MLC 60 traffic over a 60-foot-wide gap. The AVLB's eight main sections come with the necessary bracing, diaphragms, and pins. The AVLB—

- Is crew-served and highly mobile.
- Can be rapidly launched or retrieved from either end with minimum personnel exposure to enemy fire.
- Can be emplaced with little or no site preparation.

1-7. Prior reconnaissance of potential launch sites is often limited to preliminary studies of maps, aerial photos, and intelligence reports. Consider the weight of the AVLB (57 tons with the M60 chassis launcher) when selecting a launch site. See *Technical Manual (TM) 5-5420-203-14* for more information on the AVLB.

Medium-Girder Bridge

1-8. The medium-girder bridge (MGB) is a lightweight, hand-built, easily transportable bridge that can be erected in various configurations to cover a full range of military and emergency bridging requirements. The deck units are fitted between two longitudinal girders to provide a 13-foot-wide roadway. A bridge set has sufficient components to construct one 102-foot bridge in a double-story configuration or three 31-foot bridges in a single-story configuration. The MGB is constructed on rollers and launched using a detachable launching nose. It is transported on 5-ton trucks with trailers.

Ribbon Bridge

1-9. The ribbon bridge is a floating modular asset with an integral superstructure and floating supports. Individual bays are joined to form rafts or bridges for river-crossing operations. Ribbon bridges and rafts provide a reliable and responsive means of crossing wet gaps.

Expedient Bridge

1-10. Expedient bridges, built with locally procured materials, might be substituted for tactical military bridges if tactical bridging assets are not available.

LINES-OF-COMMUNICATION BRIDGES

1-11. Semipermanent, fixed, or float LOC bridges replace tactical assets until permanent bridges are constructed. The Army currently uses the Bailey bridge, Army Facilities Components System (AFCS) preengineered bridges, and nonstandard fixed bridges. See *FM 5-277* for more information on the Bailey bridge. For information on in-depth design methods for permanent bridges, see the latest edition of the *Standard Specifications for Highway Bridges* (published by the American Association of State Highway and

Transportation Officials [AASHTO]). See *TM 5-304* for more information on AFCS bridges.

BRIDGE DESIGN

1-12. Engineers design nonstandard fixed bridges to match specific conditions of a particular site when standard fixed bridges are not available or are needed forward of the proposed bridge site. Available structural materials, site details, proposed traffic, and time will influence the design. While constructing nonstandard fixed bridges is usually limited to rear areas, the tactical situation might require reinforcing or repairing a damaged bridge or constructing a new bridge in the combat zone (CZ).

1-13. The design of military nonstandard fixed bridges is similar to that of civilian fixed bridges. Military methods, however, include several simplifications and assumptions about the loads to be carried, the type of construction, and the material types available. Therefore, use the methods in this manual for temporary (3 to 5 years) military construction. Use the analytical method whenever possible. The design chapters in *Part Three* of this manual outline the specific assumptions made for military design.

ARMY FACILITIES COMPONENTS SYSTEM

1-14. The Theater Construction Management System (TCMS) is an automated personal computer (PC) based construction planning, design, management, and reporting system that is used by military engineers for contingency construction activities. Its primary purpose is to support outside continental US (OCONUS) requirements. It combines state-of-the-art computer hardware and software with AFCS design information to support and enhance the accomplishment of engineer mission activities in the TO or other mission arenas.

1-15. The TCMS is the approved method for distributing AFCS designs and related information according to *Army Regulation (AR) 415-16*. *TM 5-304* is the AFCS user's manual. The TCMS is updated and distributed annually.

1-16. The TCMS provides the automation tools necessary to use the AFCS information. This enhances the accomplishment of TO engineering and construction activities and supports mission requirements.

BRIDGE DATA

1-17. The AFCS does not include bridge installations (sets of material). The TCMS includes bills of materials with material cost data, construction drawings, and labor and equipment estimates (LEEs) for 84 bridging facilities. The US Army Corps of Engineers (USACE), Engineer Support Center, Huntsville, Attention: CEHNC-ED-SY-F, 4820 University Square, Huntsville, Alabama 35816-1822, maintains current data for facilities and installations in the AFCS.

FACILITY CODING

1-18. A physical plant (such as real estate and improvements [including a separate building, a bridge, or a piece of equipment]) that serves a function is referred to as a facility. A facility is any piece of equipment that, as an operating entity, contributes or can contribute by providing some specific type of physical support. Facilities are uniquely identified in the AFCS by a seven-character alphanumeric code (five numeric and two alpha characters) (for example, 85120NA: BRIDGE, TIMBER FRAME TRUSS, FOR 30-FOOT SPAN, DOUBLE LANE, CLASS 60). AFCS numbers are based on the facility class and construction category codes listed in *AR 415-28*. Each facility has an associated facility number, description, unit of issue, shipping volume, shipping weight, and cost. Several facility numbers might be required to complete a functional facility.

LABOR AND EQUIPMENT ESTIMATES

1-19. The LEEs within the TCMS are divided into three categories—vertical, horizontal, and general. This information can be exported to project management software and presented in any desired format.

Vertical

1-20. Vertical data is an estimate of the number of hours (by skill) required to construct a particular facility. A military occupational specialty (MOS) represents each skill (such as carpenters or electricians).

Horizontal

1-21. Horizontal data is an estimate of the number of hours of equipment needed to construct a facility. For example, bulldozers and backhoes.

General

1-22. General data is an estimate of the unskilled labor required in each area (horizontal and vertical). The general data consists of two figures—the vertical workhours and the horizontal workhours.

CLASSIFICATION INFORMATION

1-23. Local Army engineer units research bridges and maintain files on the bridges in their areas of operation (AOs). This information is passed to engineers at a higher level for consolidation and dissemination to all interested parties. As-built plans for military bridges are also available. Foreign countries maintain engineer intelligence studies that can provide classification information.

1-24. Local civilian authorities are the most important source of bridge-classification information. In most jurisdictions, as-built plans and information on material properties are available. Local and state officials in the US and most foreign countries will impose maximum load limits or permissible stresses on bridges. Consult with these officials to determine the maximum MLC of bridges for peacetime or military purposes.

ENGINEER RESPONSIBILITIES

1-25. Engineer units are responsible for classifying bridges of military significance (using the analytical method if possible). If a nonengineer unit classifies a bridge, a responsible engineer officer should verify the classification as soon as possible. If the temporary class is accurate, it may be used as the permanent class. The engineer determining the actual bridge class will post the permanent markings.

1-26. Engineer units will maintain records for bridges in its AOs. As a minimum, the file should contain a copy of *DA Form 1249* and other sketches, plans, calculations, and assumptions that were used to determine the bridges' classification. The unit should also maintain files of as-built plans of military nonstandard fixed bridges, along with the classification calculations. In many cases, the actual classification is higher than the design classification due to rounding in the design process.

SUPPORTING INFORMATION

1-27. *Appendixes A* through *H* contain the following additional information:

- *Appendix A* contains an English-to-metric measurement conversion chart.
- *Appendix B* contains information on vehicle classification.
- *Appendix C* contains information on timber properties.
- *Appendix D* contains information on steel properties.
- *Appendix E* contains information on structural mechanics.
- *Appendix F* contains classification examples.
- *Appendix G* contains information on concrete properties.
- *Appendix H* contains information on soil properties.
- *Appendix I* contains superstructure design examples.

Chapter 2

Reconnaissance and Preliminary Investigations

This chapter provides basic information on bridge-reconnaissance operations. It focuses on providing engineers with the information needed to allow them to obtain technical bridge-site data. The time and availability of qualified engineers will determine which type of bridge reconnaissance to use—hasty or deliberate.

HASTY RECONNAISSANCE

2-1. The hasty method limits obtaining bridge-site data because of time or other factors. At a minimum, the data should include the serial number, the geographic location, the MLC (if posted), the overhead clearance, and the available bypasses of the bridge. *FM 5-170* includes details of hasty reconnaissance methods. For military purposes, a hasty reconnaissance primarily concerns civilian bridges, which range from simple steel- or concrete-stringer bridges to multispan arch, truss, or suspension bridges. Army engineers usually classify military bridges (including floating, standard, and nonstandard fixed bridges) after constructing them.

DELIBERATE RECONNAISSANCE

2-2. The deliberate method requires time and qualified personnel to analyze the reconnaissance information for either repairing or demolishing a bridge. Proper reconnaissance prevents unnecessary repairs or construction delays. When possible or if required, collect and record data on the approaches, the type of crossing or obstacles, the abutments, the intermediate supports, the bridge structure, any repair information, any demolition information, and any alternate crossing sites. Record this data on *DA Form 1249* as shown in *FM 5-170*.

REPAIR OR RECONSTRUCTION

2-3. Use existing bridges whenever possible. Bridges located on established routes require less work on the approaches, which saves time and material and permits the release of tactical bridging assets to other areas. Also, bridge repair often eliminates long detours and difficult bypasses. If necessary, determine how the characteristics of the gap will affect additional bents or pile piers and where there are alternate sites.

2-4. Use *DA Form 1249* to record and report the data needed to repair or reinforce an existing bridge. The data should include—

- The type of bridge; the number and width of lanes; the number, length, and arrangement of spans; and the length of the panels.
- The height above the gap, the overhead clearance for vehicles, and the bridge's classification.
- The general condition of the bridge.
- The watercourse's width and depth; current velocity; direction of the flow; type and estimated bearing capacity of the bottom; and the bank's height, slope, and nature.
- Specifics on the access roads and approaches, particularly the work estimates on approaches and access roads between the existing road network and the bridge.
- Sites near the bridge for turnarounds, access, and concealment.
- Types, dimensions, and relative positions of the abutments and intermediate supports.
- The number, type, size, and spacing of stringers in each span.
- The type and dimensions of the decking.
- The number and types of local boats and barges.
- The location of locks, dams, and so forth in the vicinity.
- Methods and work estimates used to restore and strengthen the damaged bridge to its original specified capacity.
- A large-scale sketch of the site showing concealment, turnarounds, parking areas, detours, and expedient crossings.

NEW-BRIDGE CONSTRUCTION

2-5. New-bridge construction requires preliminary information that is adequate for planning and design. The construction method used will depend on site constraints and the availability of equipment, materials, and manpower. A thorough reconnaissance can prevent needless return trips to the proposed site. Before making any final decisions pertaining to construction, consider the following factors:

- **Access roads.** Locate the bridge to take advantage of the road network on both sides of the watercourse or gap.
- **Approach roads.** Study the construction required for bridge approaches at each site. Often, the time required to construct approaches is the controlling factor in site selection. Approaches should be straight and gently sloped. Include a turnaround near the bridge site that will allow oversize and overweight vehicles to leave the site without obstructing traffic.
- **Width.** Determine the width of the watercourse at normal and flood stages. Check with local authorities for information on frequency and severity of floods.
- **Banks.** Estimate the character and shape of the banks accurately enough to establish abutment positions. The banks should be firm and

level to limit the need for extensive grading. Select straight reaches to avoid scour.

- **Flow characteristics.** Determine the stream velocity and record erosion data on the rise and fall of the water. A good bridge site has a steady current that flows parallel to the bank at a moderate rate of about 3 feet per second (fps).
- **Stream bottom.** Record the characteristics of the bottom. This will help in determining the type of supports and footings required (soil samples might be needed).
- **Elevation.** Determine and record accurate cross-sectional dimensions of the site for determining the bridge's height. Note any required clearances if the bridge will pass over existing roads, railroads, or navigable waterways.
- **Materials.** Use standard military materials when possible for quality and speed of construction. Steel is preferred over timber. If military materials are not available, use locally procured items of adequate quality. Local sources might include standing timber, nearby demolished buildings or bridges, and local markets.

SITE REQUIREMENTS

2-6. Desirable bridge sites have certain terrain and stream characteristics. These include—

- Concealment for personnel and equipment on both sides of the gap.
- Firm banks to support the abutment and provide good approaches. High banks require excessive grading and low banks might be threatened by flooding, which requires that the bridge be lengthened.
- Terrain that will permit rapid construction of short approach roads to the existing road network on both sides of the gap.
- Access routes to the road network (necessary for transporting equipment to the assembly sites).
- Turnarounds for construction equipment.
- Large trees or other holdfasts near the banks for fastening anchor cables and guy lines.
- A steady, moderate current that is parallel to the bank.
- A bottom that is free of snags, rocks, and shoals and is firm enough to permit some type of spread footing.
- Several assembly sites for floating portions of the bridge, either upstream or downstream. If the current is strong, locate all assembly sites upstream from the bridge site.

2-7. *Figure 2-1, page 2-4,* shows an example of a construction-site layout for a proposed bridge project. Determine the final location of the bridge by following the three stages discussed below.

STAGE ONE

2-8. Develop a detailed study of the proposed site by using topographic and geologic maps and air photos (if available). Stereo air photos with a scale of

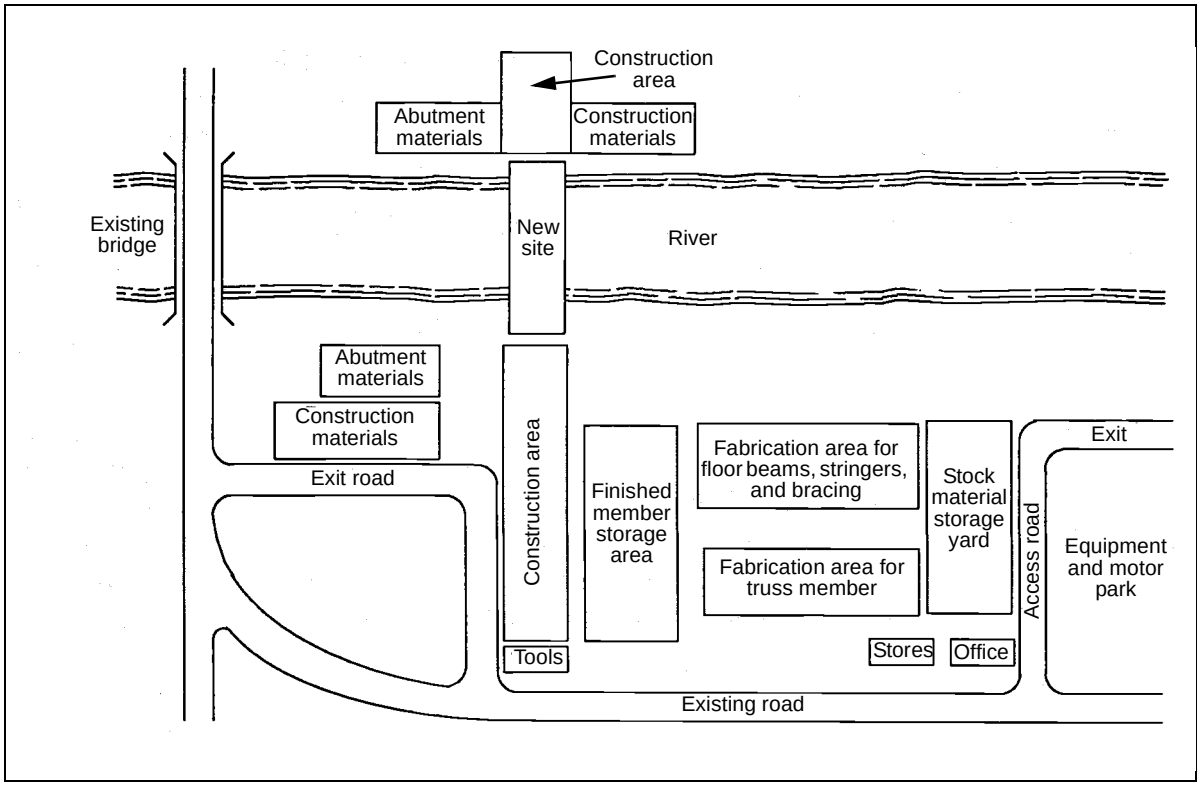

Figure 2-1. Construction-Site Layout

1:20,000 or smaller are particularly useful for a map study. These photos usually indicate stream conditions (such as channel locations and bar positions). Air photos often enhance a reasonably accurate estimate of bank-soil conditions.

STAGE TWO

2-9. Perform an on-ground reconnaissance. Some, if not all, of the following factors will influence the ultimate location and design of the bridge:

- Location of the existing road network.
- Availability of useful abutments and piers from a demolished bridge.
- Location of an existing channel that might restrict pier construction or require minimum clearance for navigation.
- Soil or rock profile of the bottom as it affects the type and position of bridge piers.
- Availability of stringer material (in required lengths and sizes) for the required spacing of intermediate supports.
- Site restrictions (such as existing structures) that might influence the location of the centerline.
- Availability of construction resources (especially labor and equipment).

STAGE THREE

2-10. Begin detailed planning. Establish horizontal and vertical controls at each end of the proposed centerline. Prepare a topographic map of about 1:250 with a contour interval of 2 feet. Use this map to plot design constraints such as the location of obstacles, required distances, and necessary elevations. Determine any unique physical characteristics of the site that would limit normal construction methods. Also, prepare a soil profile of the proposed centerline of the bridge to use in designing the foundation *(Figure 2-2)*.

Figure 2-2. Soil Profile

2-11. A soil profile represents the properties of soil layers. Take borings along the bridge's centerline, assuming that the soil a short distance away has the same characteristics. Because piers and abutments support substantial loads, take borings at each pier to determine soil properties. See *FM 5-430-00-1* and *FM 5-410* for more information on soil analysis and exploration.

2-12. A test pit (dug deep enough to inspect the soil visually) yields the most accurate soil profile. Test pits are not well suited to military bridge-construction purposes. Unless the anticipated loads are unusually great and considerable time is available to excavate and sheet the pit, do not use this method because it is expensive. Instead, obtain soil samples using an auger, a sounding rod, or a penetrometer.

SURVEY CONTROL

2-13. A survey of a proposed bridge site furnishes accurate information from which to develop the bridge's layout, to requisition material, and to outline the construction procedure. *FM 5-233* gives further details on surveying for bridge construction. Submitted as drawings, a survey shows the site's plan and elevation, with a graphical presentation of subsurface conditions. The complexity of the bridge-construction project will determine the amount and accuracy of survey control. Survey considerations are discussed in more detail in *Chapter 10*.

SURVEY DRAWINGS

2-14. Include a location map in the survey drawings that shows the relationship of the site to the communication routes and the bivouac areas for construction personnel. Also show sources of sand, gravel, timber, and other construction materials. Include a detailed site plan *(Figure 2-3)* with a scale no greater than 1:480. The plan should show the—

- Alignment of the structure and the tentative position of bents or piers and abutments.
- Position and the details of piers and abutments of any existing structure.
- Course of the stream, the bank lines, and the direction and distribution of flow.
- Natural features (such as drainage courses, eroding banks, exposed rock ledges, trees, and wooded areas).
- Existing installations (such as power and utility lines, sewers, buildings, roads, dikes, walls, and fences).
- Contour elevations extending at least 100 feet to each side of the bridge's centerline and 200 feet beyond each abutment.
- Location of all the benchmarks and their elevations, all reference points, and all borings and soil tests.

2-15. Include a profile of equal horizontal and vertical scales of not less than 1:480. The profile should show the—

- Ground surface on the centerline of the proposed bridge, extending not less than 200 feet beyond each abutment.
- Elevation of high and low water.
- Foundation materials as disclosed by test pits or borings.

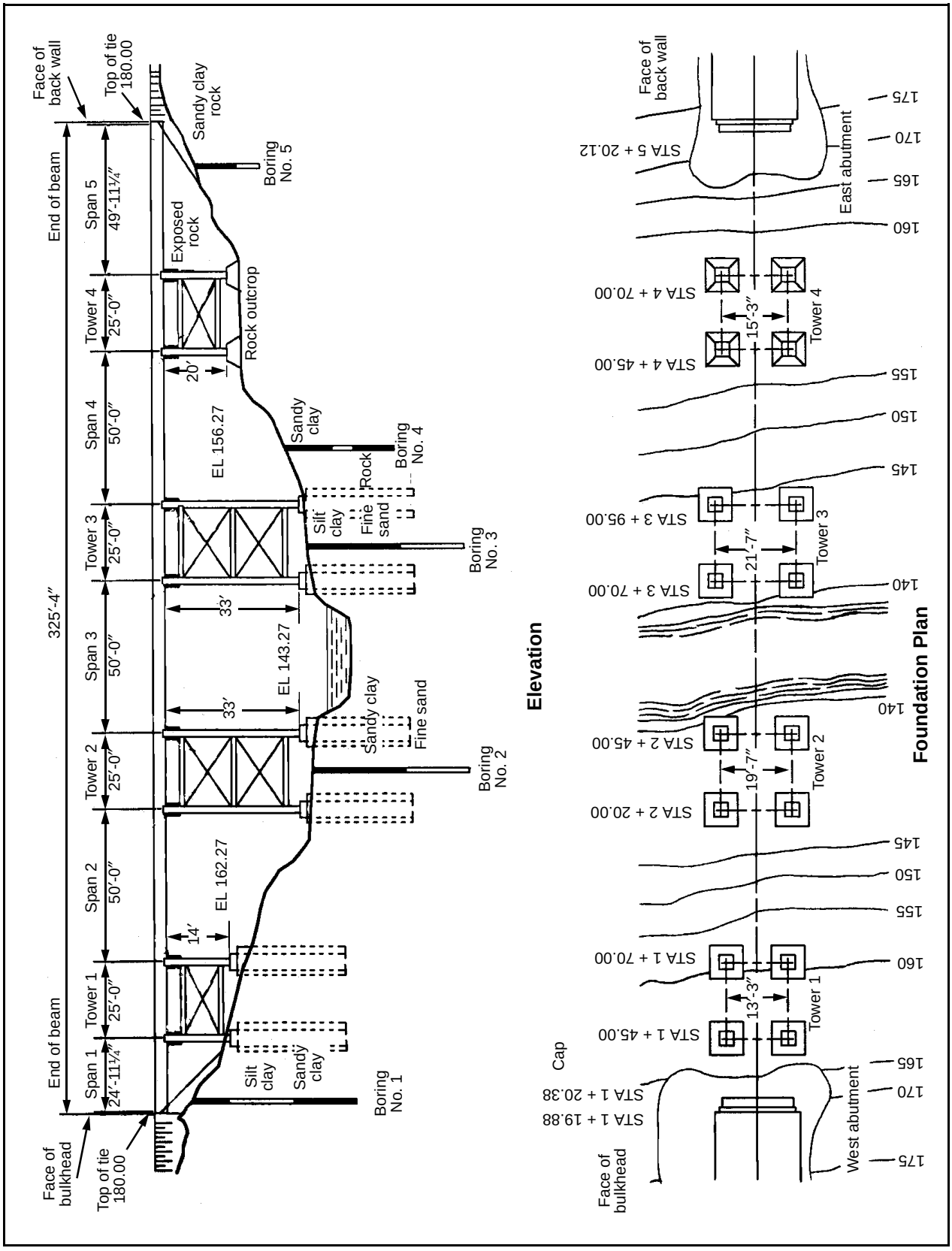

Figure 2-3. Site Plan

PART TWO

Classification, Reinforcement and Repair, and Posting

A highly mobile Army will make use of existing bridges. Before using a bridge for military traffic, engineers must first determine if the bridge can safely support the loadings. For this purpose, the Army uses the MLC system. Several methods exist for determining a bridge's MLC, each with different degrees of complexity and accuracy. These methods are discussed in *Chapter 3*.

Often, existing bridges might be in need of repair due to years of maintenance neglect or war damage. Other bridges might be in good shape physically, but their load capacities (classifications) might be too low to support the military vehicles that must use them. *Chapter 4* provides guidance for the repair of existing bridges and methods to upgrade the load capacity of typical bridges.

Once a bridge has been classified using the "analytical method" discussed in *Chapter 3*, signs must be posted on the bridge to inform users of its classification. Standard methods for posting bridges are provided in *Chapter 5*.

This chapter implements STANAG 2021 (Edition 5)

Chapter 3

Classification

A classification number is assigned to a given bridge to represent how much military vehicular traffic the bridge can carry. Width and height restrictions also affect a bridge's classification. A bridge might have a dual classification (such as for wheeled and tracked vehicles) when its capacity is greater than Class 50. The classification procedures presented in this chapter are based on guidance found in *STANAG 2021*. Other criteria (not covered by the STANAG) have been adopted from the AASHTO's *Standard Specifications for Highway Bridges*. Follow the same procedures in this chapter when analyzing foreign bridges, but be aware of and allow for any differences in material properties and design criteria.

SECTION I - BRIDGE-CLASSIFICATION CONSIDERATIONS

3-1. The two primary methods of classifying bridges are the expedient and the analytical. The analytical method is the most accurate and desirable. Between these two extremes are many combinations, some of which are discussed in this chapter. The classification method used will depend on the situation and the available time and information. A complete analytical classification might be needed if using a bridge is very important. Also, only the results from the analytical method can be posted and reported as a permanent load classification for a bridge.

3-2. Bridge reconnaissance is necessary for classification. Even if bridge plans are available, conduct an on-site inspection to ensure the accuracy of the bridge data. If key bridges are behind enemy lines, perform reconnaissance by long-range patrols or aerial photography. Local civilians are a valuable source of information and should not be overlooked during on-site reconnaissance. See *FM 5-170* for more information on conducting a bridge reconnaissance.

3-3. Engineer units are responsible for gathering and maintaining bridge-classification data for bridges in their areas. These units report this information to higher engineer echelons for consolidation and distribution. As-built plans are included as part of the bridge-classification data.

3-4. Local highway authorities are the most important source of bridge-classification information. In most jurisdictions, these authorities maintain as-built plans and information on material properties of the bridges. Local, state, and country officials in the US and most foreign countries often impose maximum load limits or permissible stresses on their bridges. It is very important that military units consult local officials when determining the maximum MLC of a bridge intended for use during peacetime maneuvers. If they do not, the provisions of *STANAG 2021* and this chapter will govern bridge classification.

SECTION II - EXPEDIENT CLASSIFICATION

3-5. In some situations, an engineer's estimate based on an expedient method might be sufficient. The classifications resulting from an expedient method will be less accurate as well as conservative. The expedient method chosen will depend on the amount of bridge data and time available for conducting a classification.

HASTY METHOD

3-6. A hasty classification is the most expedient but inaccurate classification method. It is based on how many and what types of civilian vehicles cross a bridge regularly. This information can be obtained through reconnaissance, from local officials, or from observation of the type of route that the bridge is on (for example, rural road or secondary or major highway).

3-7. Once the type of civilian vehicles that use the bridge have been identified, it can be assumed that military vehicles of similar weight and axle

configurations could also cross the bridge safely. In many cases, this method will severely limit the allowable military vehicles since many of them are much heavier than typical civilian vehicles. A more in-depth classification method will likely reveal that the bridge has a higher MLC than the hasty method indicates. Use the hasty method only when a rapid crossing is required. Do not post the resulting classification.

TRACK COMMANDER'S BRIDGE-CROSSING BOOKLET

3-8. *Graphic Training Aid (GTA) 5-7-12* contains information for armor personnel to use in determining if a bridge is capable of carrying their vehicles. This method is very conservative; use it only during high-mobility operations. Do not post this rating.

SECTION III - CORRELATION-CURVE CLASSIFICATION

3-9. A direct correlation between known civilian design loads and an equivalent MLC can be made by equating the respective design criteria and the vehicle's load effects. The bridge's original design load can be determined from the following sources (listed in decreasing order of reliability):

- Civilian bridge-inspection reports.
- Original design drawings or calculations.
- Federal or local highway authority bridge-design standards.
- Route requirements.
- Reconnaissance on known civilian vehicle usage (similar to the hasty classification).

3-10. Besides knowing the original civilian design load, the bridge's span length must be known. Use the design load and the span length to determine a temporary MLC using the correlation curves shown in *Figures 3-1* through *3-7, pages 3-4* through *3-7*.

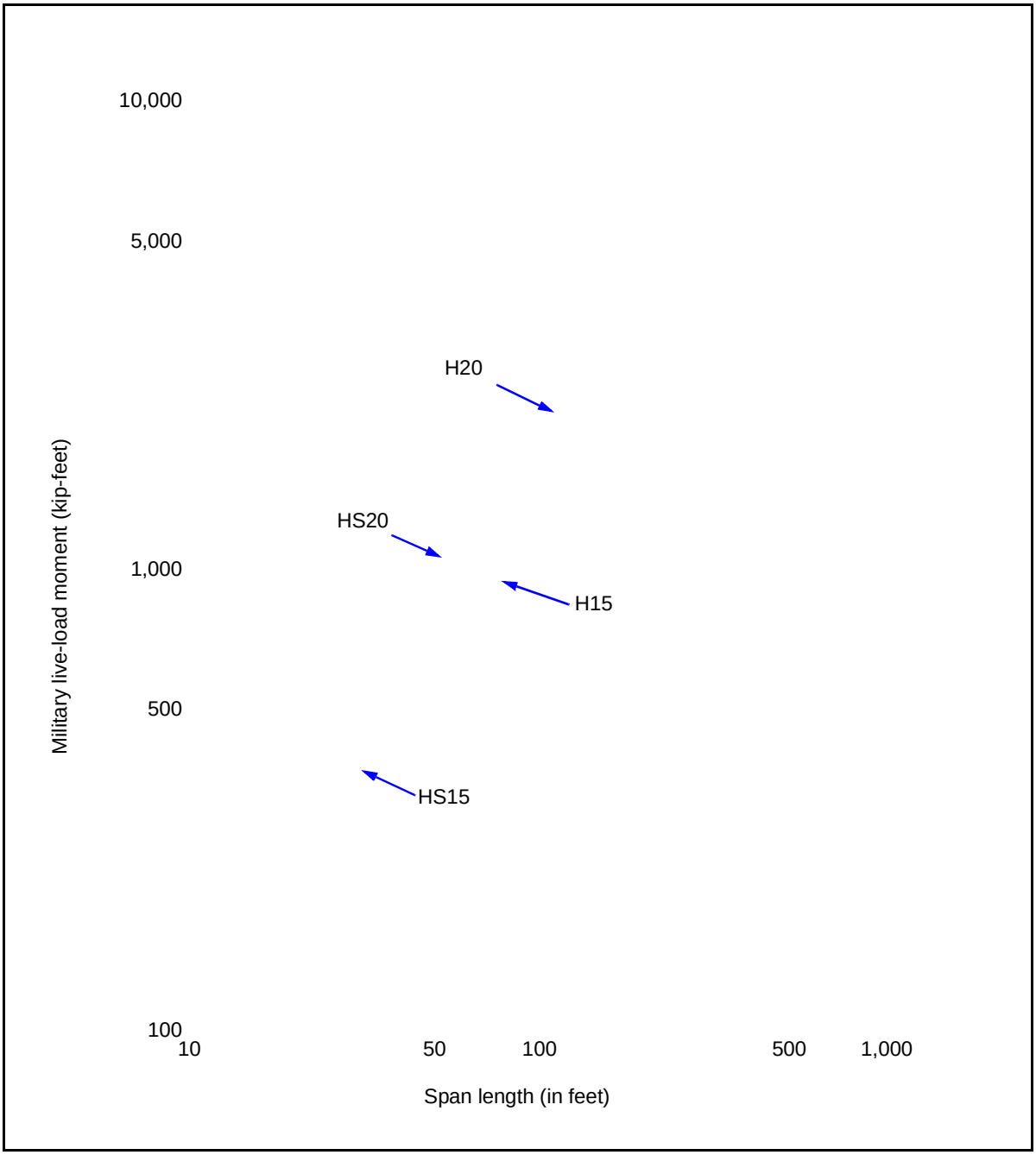

Figure 3-1. Correlation Curves for the United States

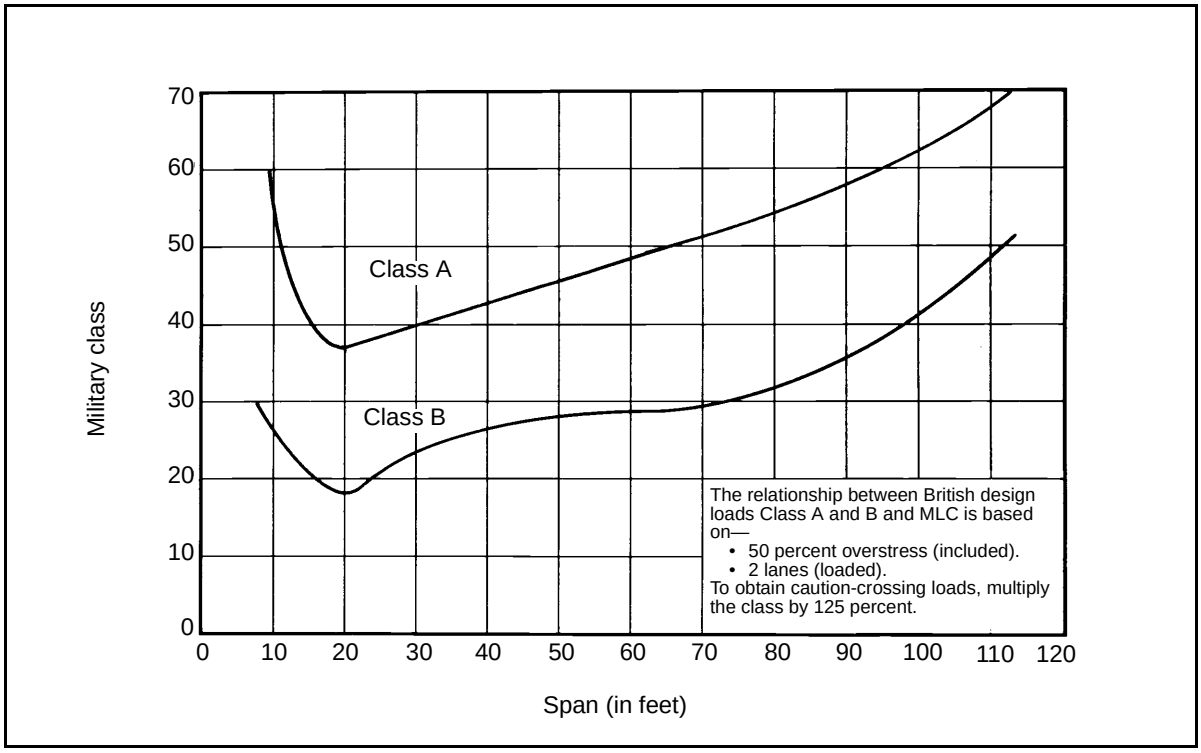

Figure 3-2. Correlation Classification for Civilian Bridges (British)

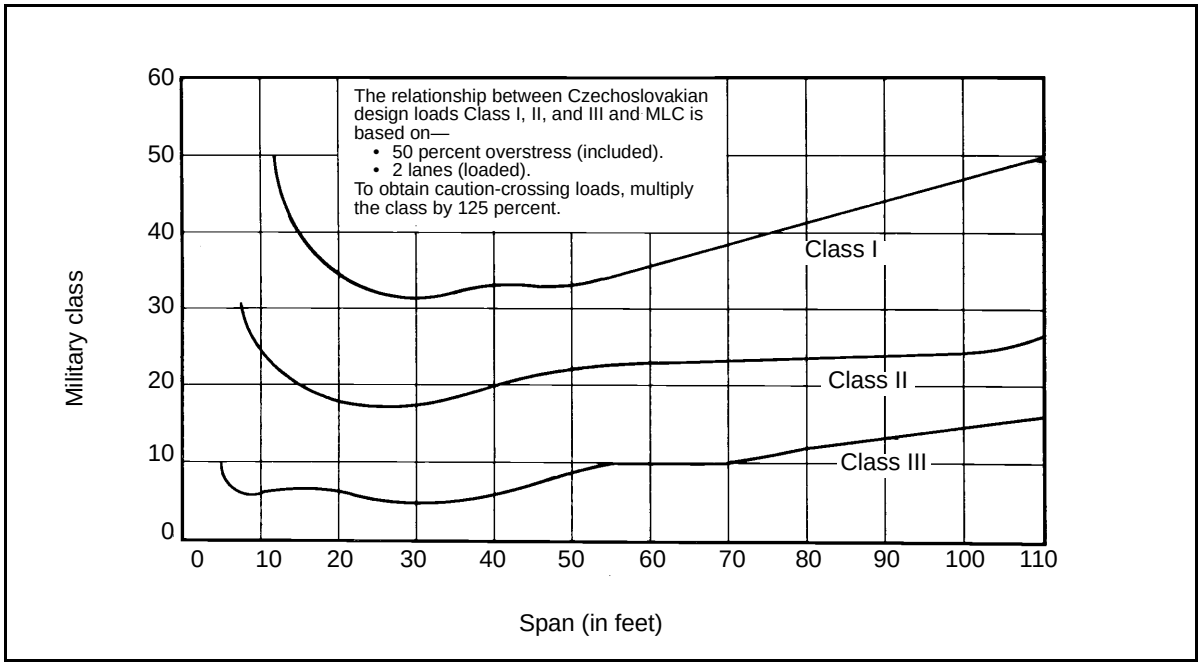

Figure 3-3. Correlation Classification for Civilian Bridges (Czechoslovakian)

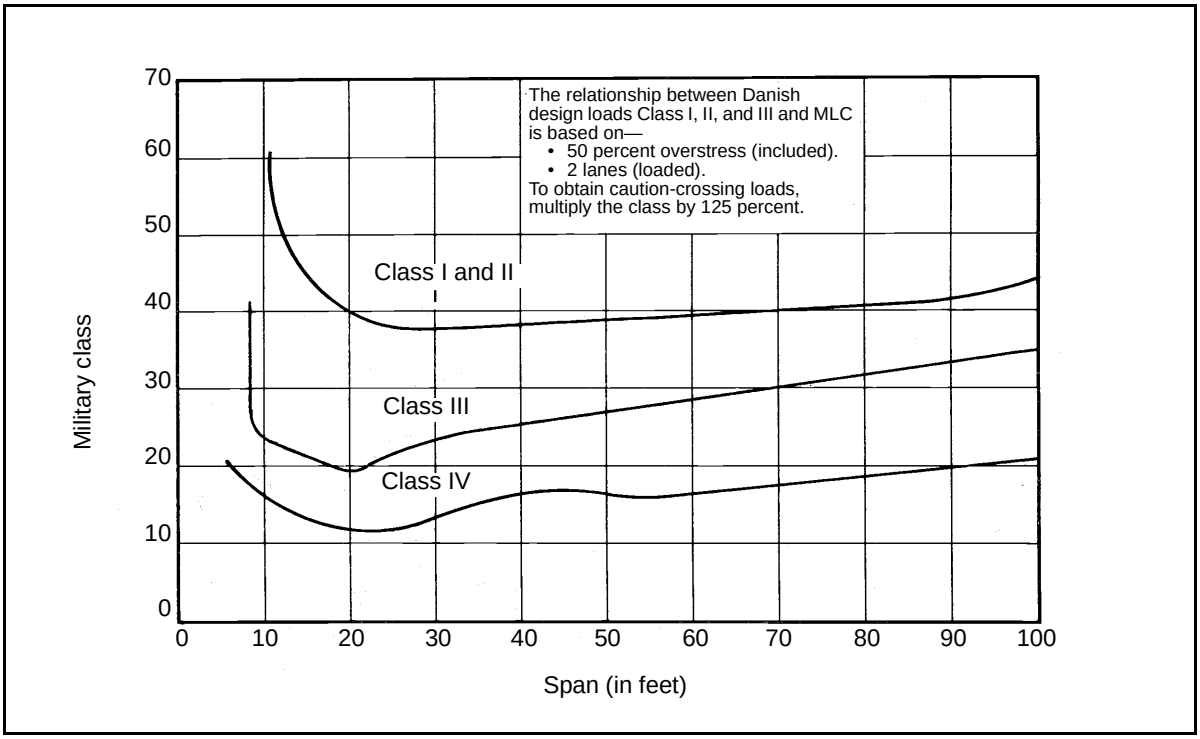

Figure 3-4. Correlation Classification for Civilian Bridges (Danish)

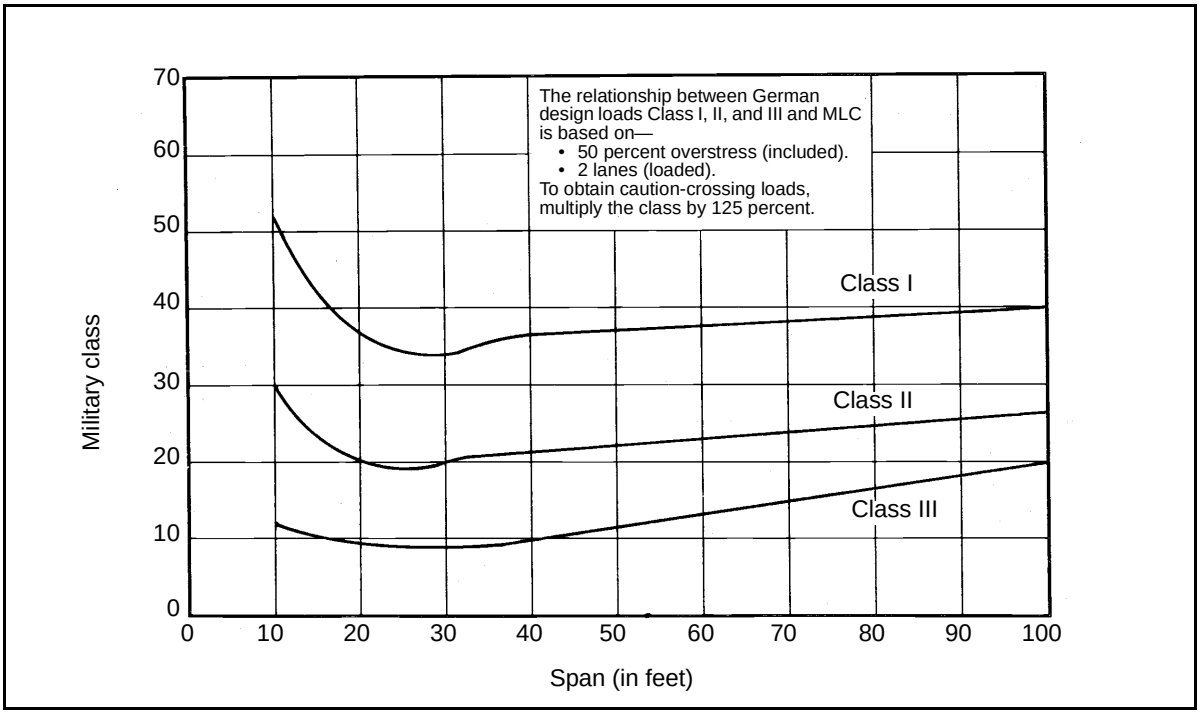

Figure 3-5. Correlation Classification for Civilian Bridges (German)

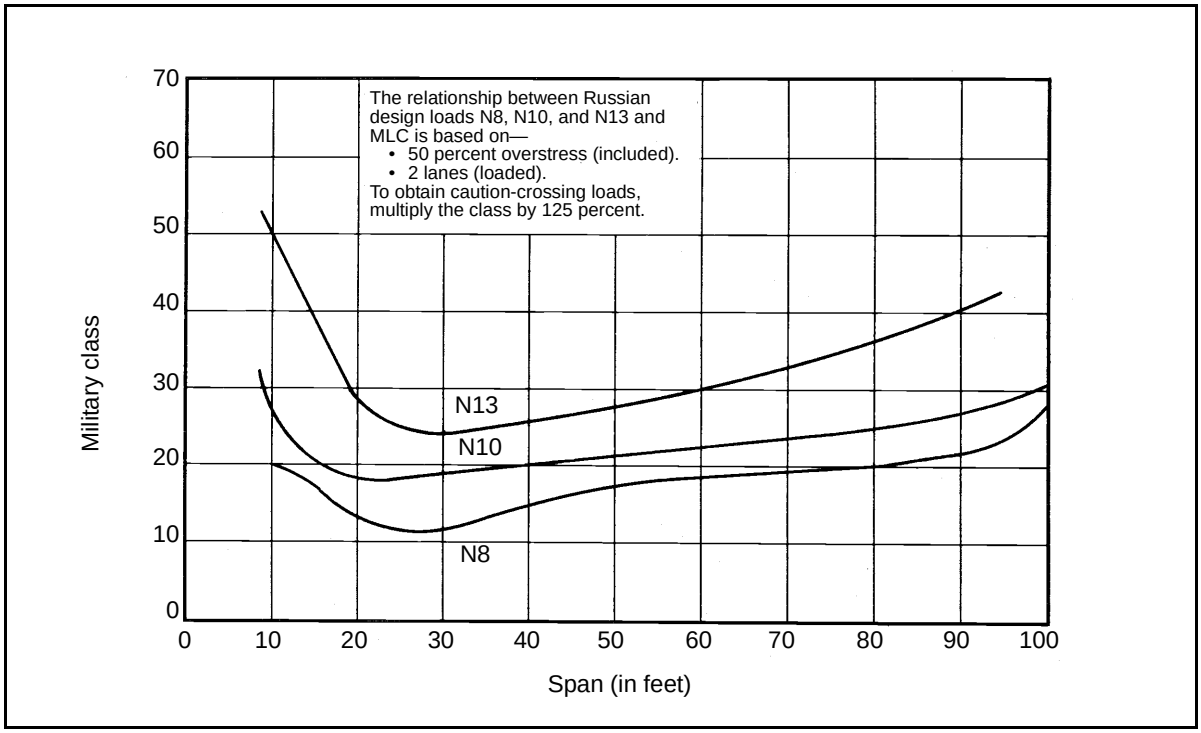

Figure 3-6. Correlation Classification for Civilian Bridges (Russian)

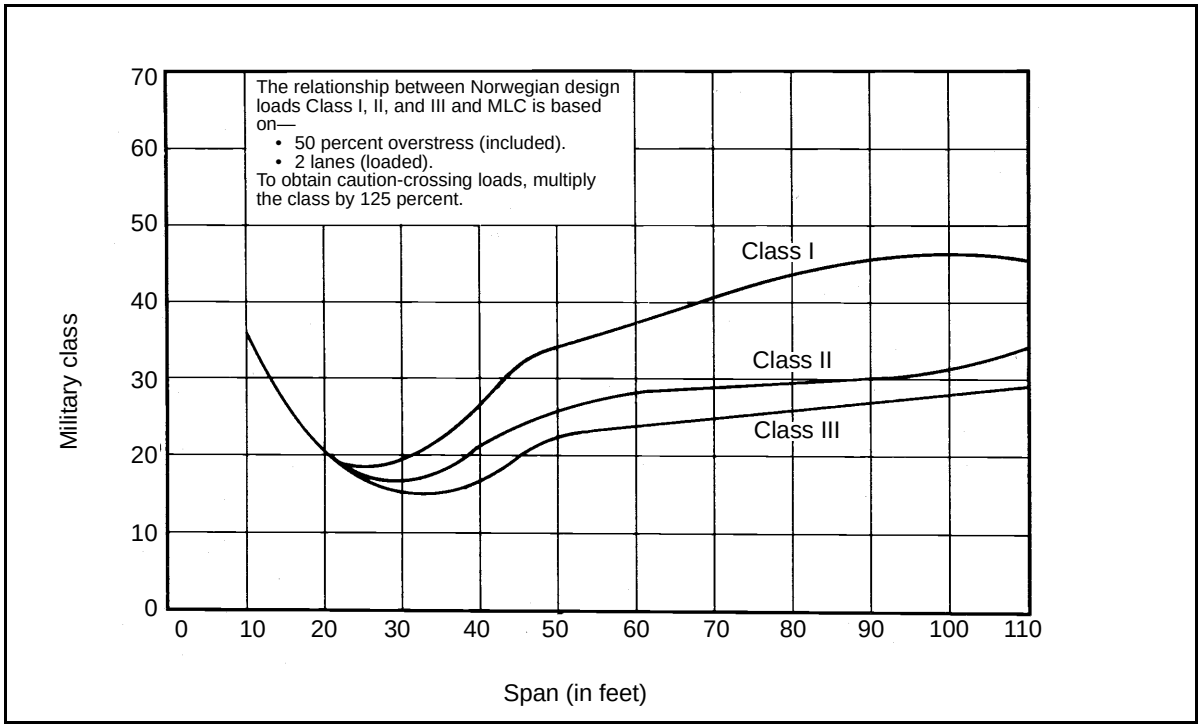

Figure 3-7. Correlation Classification for Civilian Bridges (Norwegian)

CORRELATION-CURVE APPLICATIONS

3-11. Only temporary MLCs are allowed with the correlation method. However, the method is soundly based on bridge-design theory and, when used properly, can result in a competent rating. Use these curves only on bridges that were designed using the appropriate design loadings and appropriate design criteria. Consequently, do not use the correlation-curve method on bridges in the back country or in third-world locations because careful design practices were probably not followed.

BRIDGE CONDITION

3-12. The correlation-curve method assumes that a bridge is in good condition (no significant deterioration). Because original bridge designs were probably conservative, allow for a small degree of deterioration before lowering the bridge's MLC. However, if the bridge appears significantly deteriorated, reduce the MLC accordingly. There are no firm guidelines to use when downgrading the MLC based on deterioration. However, a simple rule of thumb is as follows: if a member appears to have lost "X" percentage of its original cross section, reduce the computed MLC by the same percentage.

SPAN LENGTH

3-13. The correlation curves were developed for simply supported spans; however, other types of bridges can be classified by using the adjusted or equivalent span length. The adjusted or equivalent span length takes into consideration the positive moment on continuous or cantilevered spans. For truss, arch, and suspension bridges, apply the special considerations discussed below to determine the equivalent span length.

3-14. The correlation-curve method can be used for all bridge types. However, for truss and suspension bridges, use the procedure very carefully. If not careful and if using the wrong span length, the results could be too liberal for classification purposes. For each of these bridge types, determine the two span lengths as follows. After determining the truss span length and the panel length, use the lowest MLC rating.

- **First span length.** Follow the guidelines in *paragraphs 3-15* through *3-17* (using the total span length) for all other types of bridges to determine the first span length. For single-span trusses, use the actual span length. For continuous-span trusses, use the equivalent span length (*paragraph 3-42*). For cantilever truss spans, use the span length of the suspended span. For steel-arch and suspension bridges, use the single longest span length.
- **Second span length.** Follow the guidelines in *paragraphs 3-15* through *3-17* (using a span length equal to the stringers composing the floor system). These spans will be much shorter than those from the first span length. If stringer measurements are unavailable, use the following aids:
  - For trusses, floor stringers are equal in length to the truss-panel lengths, which is the distance between intersections of truss diagonals. If panel lengths vary, use the longest.

- For steel arches, floor stringers are equal in length to the horizontal distance between the vertical supports running from the main arch to the bridge deck.
- For suspension bridges, floor stringers are equal in length to the horizontal distance between hanger cables, which are the vertical cables suspended between the main suspension cable and the bridge deck.

CORRELATION-CURVE USES

3-15. Once the span length has been determined, use correlation curves to determine the MLC. The process differs with US and foreign bridges.

UNITED STATES BRIDGES

3-16. *Figure 3-1, page 3-4,* shows the correlation curves for bridges in the US. The four standard classes of highway loading (as defined by AASHTO) used in the US are H15, H20, HS15, and HS20. The correlation curve that is used will depend on the year in which the bridge was designed and the route it is on. For newer or reconditioned bridges on major US highways, it will most likely be HS20. If unable to determine the original design load for older US bridges, the H15 curve can usually be used.

3-17. Locate the appropriate span length and the AASHTO loading on the graph, and read left to get the live-load moment. If the bridge normally carries two-way civilian traffic but a one-way MLC is needed (this will be higher than a two-way MLC and is used for caution crossings), multiply the live-load moment by the appropriate adjustment factor (K) from *Table 3-1, page 3-10*. Do not use the adjustment factor for a two-way MLC. Determine the live-load moment from *Figure 3-1*. Using this value of live-load moment along with the span length, determine the wheeled and tracked MLC from *Table B-2, pages B-6* through *B-9*. Adjust the MLC downward to account for width and height restrictions (see *paragraph 3-44* for more information).

FOREIGN BRIDGES

3-18. *Figures 3-2* through *3-7, pages 3-5* through *3-7,* show the correlation curves for other countries. Use the particular country's chart, locate the span length, and move up to intersect the appropriate bridge category. Then read the MLC from the scale on the left. These curves give a two-way MLC. For a one-way MLC, multiply the resulting MLC by the appropriate adjustment factor from *Table 3-1*.

Table 3-1. Two-Way to One-Way Traffic Adjustment Factors

Floor Type		Adjustment Factor (K)
Timber		
Plank		1.07
Nail laminated	4 inches thick or multiple-layer floors over 5 inches thick	1.12
	6 inches or more thick	1.18
Glue laminated	up to 4 inches thick on glue-laminated stringers	1.12
	> 6 inches thick on glue-laminated stringers	1.20
	up to 4 inches thick on steel stringers	1.12
	> 6 inches thick on steel stringers	1.17
Concrete		
Concrete on steel I-beam stringers and prestressed concrete girders		1.27
Concrete on concrete T-beams		1.08
Concrete on timber stringers		1.20
Concrete box girders		1.14

SECTION IV - ANALYTICAL BRIDGE CLASSIFICATION

3-19. The analytical classification method is basically the reverse of the design method. In the design method, engineers establish the desired MLC and then determine the required size and quantity of bridge components to meet that MLC. In the analytical method, the bridge already exists and engineers must determine the composition, the dimensions, and the type of construction to obtain a permanent bridge classification. The analytical classification is based on classical methods of engineering analysis, but no rigid rules apply to the techniques used.

3-20. The difficulty of analytical bridge classification varies with the bridge type. The degree of accuracy depends on the information available, the techniques used, and the amount of detail covered. Some information gathering might be too difficult or time-consuming to be worth the effort. The engineer must make reasonable assumptions based on the information available. The classification techniques have been simplified as much as possible, consistent with good engineering practices, to permit a reasonably accurate bridge classification. Only qualified engineers should make permanent classifications.

CLASSIFICATION ASSUMPTIONS

3-21. The superstructure is almost always the controlling feature in bridge classification. Because the superstructure must span large distances, its elements must be made as lightweight as possible (designs must be optimized). This can be done effectively since superstructure loadings are fairly predictable. Substructures, however, must be more conservative (less efficient) in design to account for unpredictable loadings (stream and ice flow,

barge impact) and unknown soil conditions. Do not check the substructure unless it appears to be significantly deteriorated or unstable due to scour or settlement, or is improperly designed or constructed.

CONTROLLING FEATURES

3-22. *Figure 3-8* shows typical bridge components. The deck structure is generally stronger than its supporting superstructure; therefore, it is not considered in most classifications. The only exception to this rule is timber decking, which may be weaker than the rest of the superstructure.

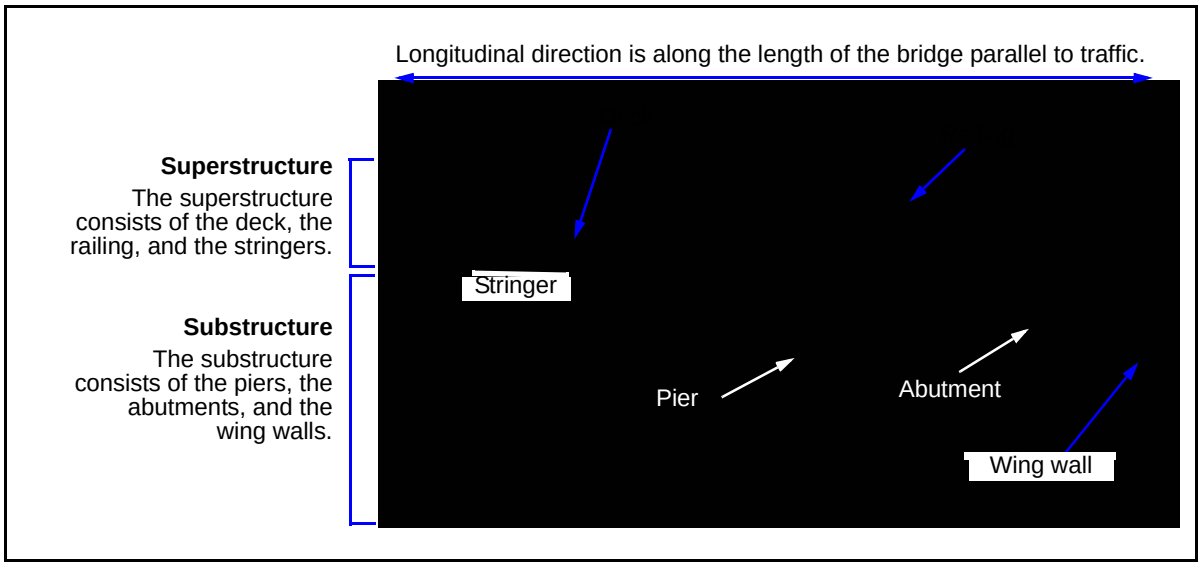

Figure 3-8. Typical Bridge Components

3-23. Generally, connections are also stronger than the superstructure beams; therefore, they do not have to be considered in most classifications. The only exception is when a connection is deteriorated due to such factors as overstress or rust. In these cases, reduce the computed MLC (based on the superstructure beams) by an appropriate amount. If possible, study and document the connection carefully. Afterwards, an engineer can make a more accurate assessment of the connection's load capacity.

3-24. For bending-moment calculations on beams, assume the midspan to be the controlling location. The list below gives examples of where the midspan may not be the controlling location. Despite these possibilities, using midspan moments in all cases should give reasonable classifications.

- Steel girders with cover plates, where the worst case may be at the ends of the cover plates.
- Variable-depth plate girders, where the worst case may be at changes in the cross section.
- Reinforced concrete beams, where the worst case may be at bar cut-off points throughout the beam.
- Interior supports of continuous-span structures.

3-25. Bridges with longitudinal stringers may have smaller exterior stringers than interior stringers. The reason is because exterior stringers, by virtue of location, do not receive as much of the vehicular loading as interior stringers. For rating purposes, assume that the interior stringers control. This is a reasonable assumption since military convoy loadings are generally concentrated toward the center of a bridge. If this case does not occur, consider the capacity of the exterior stringers separately.

BRIDGE CONDITIONS

3-26. Classification procedures assume that a bridge is sound. Because original bridge designs are generally conservative, allow for a small degree of deterioration before reducing the computed classification. However, if the bridge appears significantly deteriorated, reduce the MLC accordingly. If a careful on-site inspection can be conducted, account for deterioration by reducing the cross-sectional dimensions of the members (or reinforcing steel) or by reducing material strengths. If an inspection is not possible, then compute the classification based on normal conditions and make conservative assumptions about the MLC to account for the deterioration.

MEASUREMENTS

3-27. Measure the spans of simply supported bridges from center to center of the supports. The supports may be bearing plates or rollers. In a multispan bridge, measure the weakest span for classification purposes. If not sure which spans to measure, measure and classify all of them. Measure the spans to the nearest 1/2 foot, always rounding up. Prepare sketches showing all the bridge's dimensions and cross sections that were used to classify it. For moment calculations, measure the cross-section dimensions at the midspan and indicate the complete details of the main structural component. For shear calculations, measure the cross-section dimensions near the span supports. If using as-built plans and specifications to classify a bridge, survey the bridge to verify the drawings and check the existing bridge conditions. For more information on bridge reconnaissance, see *FM 5-170*.

DEAD LOAD

3-28. The dead load is usually computed as a uniformly distributed load acting along the length of a member. Compute the dead load, based on member dimensions, using the typical weights shown in *Table 3-2*. Dead load consists of the weight of—

- The main structural members (stringers, girders, or trusses).
- The decking.
- All accessories and hardware (curbs, handrails, bracing, nails, and bolts).

3-29. The weight of a 1-foot length of the bridge span is computed to determine the uniform dead load. To compute the dead load, determine the weight per foot of all members supporting the loads and add it to the weight of all the bridge components carried by the members in a 1-foot length of the span. *Equations 6-35* through *6-43* are simpler for determining the dead load.

Next, compute the portion of the dead load that each member is carrying as follows:

$$w_{DL} = \frac{W'_{DL}}{N_S} \quad (3\text{-}1)$$

where—

w_{DL} = *dead load carried per member, in kips per foot (kpf)*
W'_{DL} = *total dead-load weight of the bridge per foot of span, in kips*
N_S = *number of stringers or girders in the span*

Table 3-2. Typical Unit Weights for Dead Load

Material	Unit Weight (lb/cu ft)
Steel or cast steel	490
Cast iron	450
Aluminum alloys	175
Timber (treated or untreated)	50
Concrete (plain or reinforced)	150
Compacted sand, earth, gravel, or ballast	120
Loose sand, earth, and gravel	100
Macadam or gravel (rolled)	140
Cinder filling	60
Asphalt pavement	150
Railway rails, guard rails, and fastenings (per linear foot of track or roadway)	200
Stone masonry	170

LIVE LOAD

3-30. Vehicle loads are assumed to be the only live load acting on a bridge. The standard NATO vehicles in *Appendix B* are the vehicles that should be used to rate bridges. Assume the standard NATO convoy spacing of 100 feet between vehicles when rating. Because of this large spacing, usually only one vehicle will be on any single span of the bridge at a time. If significant pedestrian traffic is expected (refugees and dismounted military units), treat these as line loads of 75 pounds per foot, each over a 1-foot width. Place these line loads where the lines of people might be expected.

IMPACT LOAD

3-31. Increase the live loads by 15 percent to account for impact. Use this factor for all bridge types and span lengths except for timber-stringer or floating bridges. The impact on these bridges is zero.

LOAD DISTRIBUTION

3-32. Each structural component of a bridge shares, to varying degrees, in carrying the applied live loads. This load-sharing concept is accounted for in the bridge rating procedure by the number of effective stringers. The values in *Table 3-3* are for longitudinal stringers and depend on the deck stiffness and stringer type and spacing. The specific use of these factors for different bridge types is discussed below. Distribution equations for other members (such as girders and trusses) are provided in their respective sections.

Table 3-3. Number of Effective Stringers on a Bridge

Floor Type		One Traffic Lane	Two or More Traffic Lanes
Timber			
Plank		*$8/S_s$*	*$7.5/S_s$*
Nail-laminated panels	4″ thick or multiple-layer floors over 5″ thick	*$9/S_s$*	*$8/S_s$*
	6″ or more thick	*$10/S_s$ (if S_s is > 5′, use $N_1 = 2$)*	*$8.5/S_s$ (if S_s is > 6.5′, use $N_2 = 1.3$)*
Glue-laminated panels	Up to 4″ thick on glue-laminated stringers	*$9/S_s$*	*$8/S_s$*
	> 6″ thick on glue-laminated stringers	*$12/S_s$ (if S_s is > 5.5′, use $N_1 = 2$)*	*$10/S_s$ (if S_s is > 7.5′, use $N_2 = 1.3$)*
	Up to 4″ thick on steel stringers	*$9/S_s$*	*$8/S_s$*
	> 6″ thick on steel stringers	*$10.5/S_s$ (if S_s is > 6′, use $N_1 = 1.9$)*	*$9/S_s$ (if S_s is > 7′, use $N_2 = 1.3$)*
Concrete			
Concrete on steel I-beam stringers and prestressed concrete girders		*$14/S_s$ (if S_s is > 10′, use $N_1 = 1.4$)*	*$11/S_s$ (if S_s is > 14′, use $N_2 = 0.8$)*
Concrete on concrete T-beams		*$13/S_s$ (if S_s is > 6′, use $N_1 = 2.2$)*	*$12/S_s$ (if S_s is > 10′, use $N_2 = 1.2$)*
Concrete on timber stringers		*$12/S_s$ (if S_s is > 6′, use $N_1 = 2$)*	*$10/S_s$ (if S_s is > 10′, use $N_2 = 1$)*
Concrete box girders		*$16/S_s$ (if S_s is > 12′, use $N_1 = 1.3$)*	*$14/S_s$ (if S_s is > 16′, use $N_2 = 0.88$)*

LEGEND:
S_s = stringer spacing, in feet
N_1 = number of effective stringers for one-way traffic
N_2 = number of effective stringers for two-way traffic

ALLOWABLE STRESSES

3-33. A load classification will only be as good as the definition of the material properties (for example, yield point or modulus of elasticity). Determine these properties as accurately as possible. Obtain accurate data from property testing (nondestructive testing, concrete cores, steel coupons), an original design, or as-built drawings/records. Once obtained, reduce the maximum material properties by specific amounts to obtain the safe usable portion of the property, referred to as the allowable stress. Allowable stresses based on deflection, bearing stress, and fatigue are not considered in this manual. The following list tells where to find allowable stresses and specific material properties for the different elements:

- Timber, *paragraph 3-47*.
- Steel, *paragraph 3-63*.
- Concrete, *paragraph 3-132*.
- Prestressed concrete, *paragraph 3-164*.

MOMENT CLASSIFICATION FOR SIMPLE SPANS

3-34. Compute the total moment capacity of the main structural component (stringer, girder, or floor beam) as follows:

$$m = \frac{F_b S}{12} \qquad (3\text{-}2)$$

where—

m = *total moment capacity of the individual structural component, in kip-feet*
F_b = *allowable bending stress of the member, in kips per square inch (ksi)*
S = *section modulus, in cubic inches (Appendix C for timber and Appendix D for steel)*

DEAD LOAD AND DEAD-LOAD MOMENT OF A COMPONENT

3-35. Determine the portion of the dead load carried by the structural component (*paragraph 3-28*) and the dead-load moment that applies to that component. See *Appendix D* for concentrated dead loads. For uniformly distributed dead loads, use the following equation:

$$m_{DL} = \frac{w_{DL} L^2}{8} \qquad (3\text{-}3)$$

where—

m_{DL} = *dead-load moment per component, in kip-feet*
w_{DL} = *total dead load per stringer, in kpf (equation 3-1)*
L = *span length, in feet (equivalent span length for continuous spans)*

LIVE-LOAD MOMENT OF A COMPONENT

3-36. Compute the live-load moment of a component as follows:

$$m_{LL} = \frac{m - m_{DL}}{1 + x} \quad (3\text{-}4)$$

where—

m_{LL} = *live-load moment per component, in kip-feet*
m = *total moment capacity, in kip-feet (equation 3-2)*
m_{DL} = *dead-load moment per component, in kip-feet (equation 3-3)*
x = *impact factor (0 for timber; 0.15 for steel or concrete)*

NUMBER OF EFFECTIVE COMPONENTS

3-37. Determine the number of effective components that support the live loads for one- and two-lane traffic. Each bridge-classification procedure addresses the number of effective bridge components.

TOTAL LIVE-LOAD MOMENT PER LANE

3-38. Compute the total live-load moment per lane as follows:

$$M_{LL} = N_{1,2} m_{LL} \quad (3\text{-}5)$$

where—

M_{LL} = *total live-load moment per lane, in kip-feet*
$N_{1,2}$ = *number of effective components supporting the live load, for either one- or two-lane traffic (Table 3-3, page 3-14)*
m_{LL} = *live-load moment per component, in kip-feet (equation 3-4)*

MOMENT CLASSIFICATION FOR VEHICLES

3-39. Determine the moment classification for wheeled and tracked vehicles and for one- and two-lane traffic. To do this, use the hypothetical vehicle-moment tables or curves in *Table B-2, pages B-6* through *B-9*, or *Figures B-1* or *B-2, pages B-15* and *B-16*.

MOMENT CLASSIFICATION FOR CONTINUOUS SPANS

3-40. Continuous-span bridges are often used for multispan bridge structures (*Figure 3-9*). This type of bridge results in a savings of material or in longer spans for the same amount of material when compared to a simply supported bridge. The efficiency of a continuous-span bridge lies in the principle that the total moment imposed on a bridge is distributed between positive moment at the midspan and negative moment over the continuous supports. Due to this redistribution of moment, a smaller bridge member (stringer, girder, truss) will be required to resist the moment caused by the applied loads. *Figure 3-10* compares a simply supported and a continuous-span bridge.

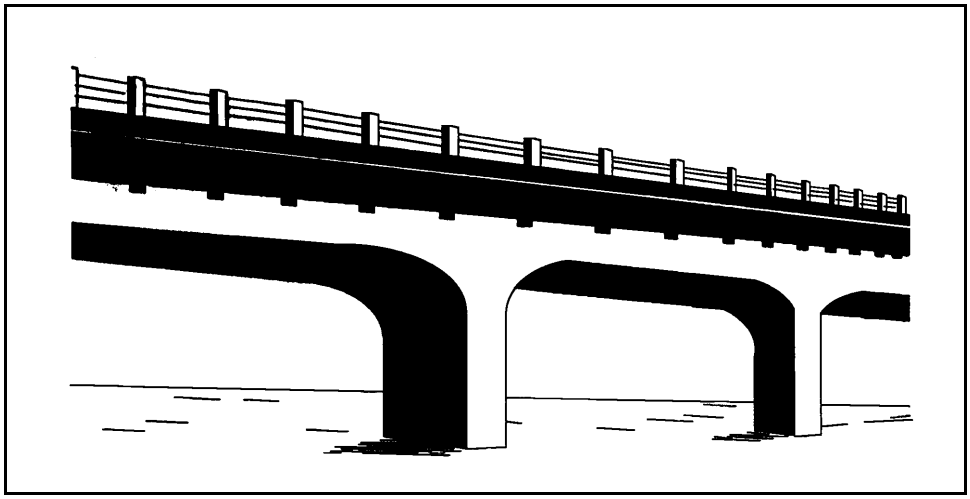

Figure 3-9. Typical Continuous-Span Bridge

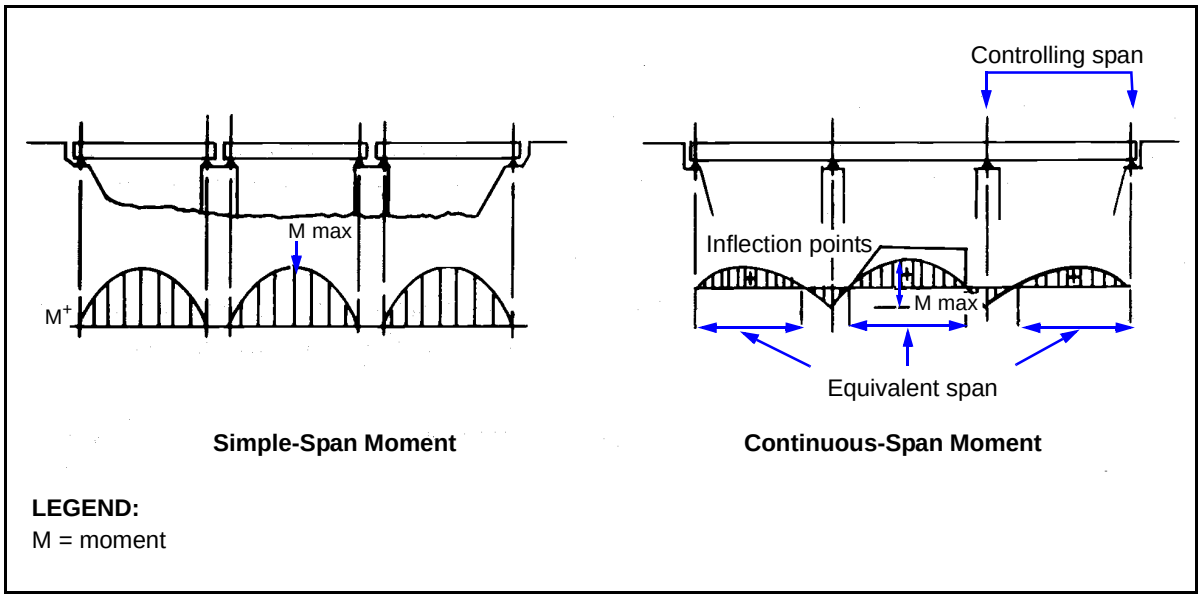

Figure 3-10. Comparison Between a Simple-Span and Continuous-Span Bridge

EQUIVALENT SPAN LENGTH

3-41. Continuous-span beams are always indeterminate. Therefore, accurate bending moments within the spans can only be determined by rigorous indeterminate analysis (such as moment distribution or matrix methods). Such an analysis is not practical in most situations; therefore, an expedient, yet reliable, method is needed. Ordinary continuous-span bridges can be rated approximately, using the concept of an equivalent simple span. A simple span is often thought of as the distance between the live-load inflection points on a continuous-span bridge. Actually, the equivalent span length is the length of a simple span that would receive the same maximum live-load moment that would be produced on a continuous span by the same loading.

3-42. The equivalent simple-span length is 0.80 times the length of the end span or 0.70 times the length of the interior span. If a bridge has all equal span lengths, analyze the exterior span. If a bridge has various span lengths, analyze the span that results in the longest equivalent span length. The applicability of these factors decreases for bridges with spans greater than 90 feet or with large differences in the cross section or the span length. In these cases, consider using a more in-depth indeterminate analysis.

FINAL CLASSIFICATION

3-43. After selecting the controlling span and its equivalent span length, classify the bridge the same as a simply supported span. Note that for this situation, use the equivalent span length for calculating dead-load moment. Obtain the live-load moment from the tables and curves in *Appendix B*.

ROADWAY-WIDTH CLASSIFICATION AND CLEARANCE RESTRICTIONS

3-44. Minimum roadway-width restrictions shown in *Table 3-4* are based on NATO military-vehicle classifications (see *STANAG 2021*). If a bridge with a specific classification meets these width requirements, all standard military vehicles bearing the same or lower classification may cross the bridge. If a one-lane bridge meets all the requirements except the minimum width, post a width restriction without downgrading the classification. Two-lane bridges must meet the requirements in *Table 3-4*. If necessary, downgrade the two-lane classification for width requirements. The desirable minimum overhead clearance for bridges is 14 feet 9 inches. Post a clearance-restriction sign and a telltale for bridges not meeting overhead-clearance requirements. Posting requirements are discussed in *Chapter 5*.

Table 3-4. Minimum Roadway Widths

Bridge Classification	Minimum Curb-to-Curb Width	
	One Lane	Two Lanes
4 to 12	9 ft 0 in (2.75 m)	18 ft 0 in (5.5 m)
13 to 30	11 ft 0 in (3.35 m)	18 ft 0 in (5.5 m)
31 to 60	13 ft 2 in (4.00 m)	24 ft 0 in (7.3 m)
61 to 100	14 ft 9 in (4.50 m)	27 ft 0 in (8.2 m)
101 to 150	16 ft 5 in (5.00 m)	32 ft 0 in (9.8 m)

SOLID-SAWN AND GLUE-LAMINATED TIMBER-STRINGER BRIDGES

3-45. Timber-stringer bridges (*Figures 3-11* and *3-12*) are very common because they are often more economic and expedient than steel or concrete bridges. The timber may be native or dimensioned or glue-laminated sections. The spans are usually simply supported and rarely exceed 20 feet. The decks are either plank or laminated timber. Some civilian bridges may have asphalt wearing surfaces, which will significantly affect the dead load on the bridge.

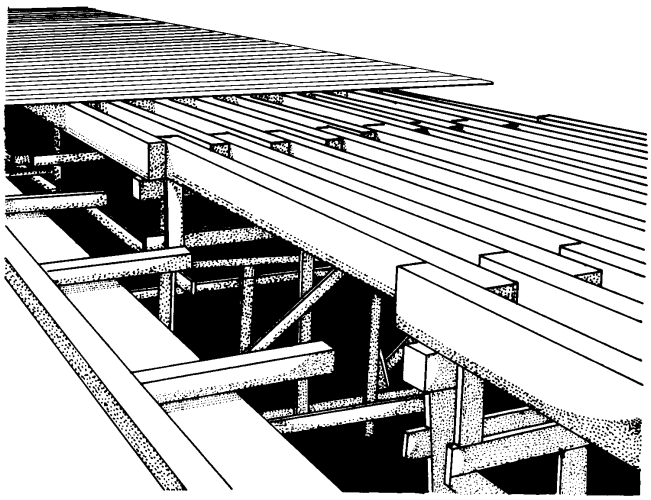

Figure 3-11. Timber-Stringer Bridge

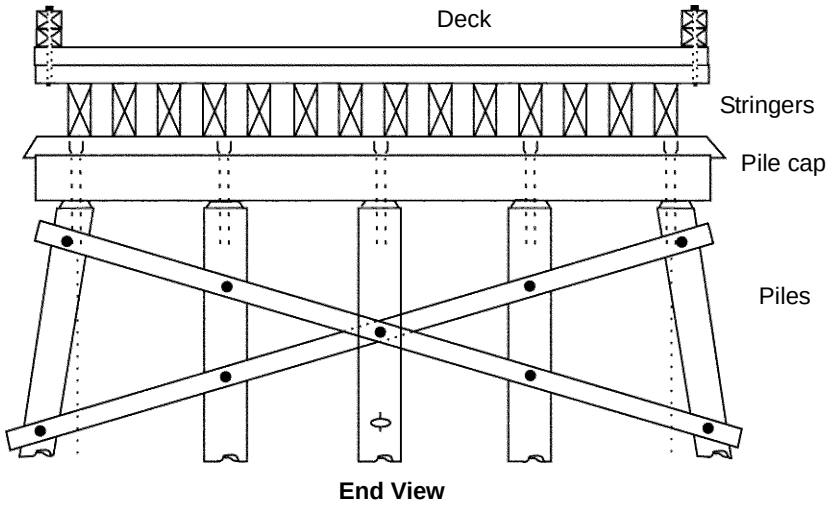

Figure 3-12. Timber-Stringer Bridge Components

3-46. The kinds and qualities of timber vary greatly, depending on such factors as geographic location, age, load history, defects, and moisture content. If the species and grade of the timber are known (as-built or design drawings), use the allowable stresses from *Table C-1, pages C-3* through *C-6*, or the design drawings (if provided). In most cases for military loadings, these values may be increased by a factor of 1.33 to account for lower traffic volume (shorter cumulative load duration, which is significant for timber). Do not apply this factor for nonengineered bridges. Apply other modification factors to the allowable stress to account for such variables as lumber thickness/width

ratios, edgewise or flatwise use, repetitive member use, and moisture content (see *Table C-1, pages C-3* through *C-6*, notes). In most cases, timber decking and stringers will retain moisture on their horizontal surfaces and should be considered in *wet-service conditions* as shown in *Table C-1*.

3-47. If the species and grade of the timber cannot be determined, use *Table C-2, page C-7*, to get allowable moments and shears or compute them using assumed values. For solid-sawn timber, assume the allowable bending stress to be 1.75 ksi and the allowable horizontal-shear stress to be 0.095 ksi. For glue-laminated timber, assume the allowable bending stress to be 2.66 ksi and the allowable horizontal-shear stress will be 0.200 ksi. Do not apply the increase factor of 1.33 (as discussed above) to these assumed values. However, apply the adjustment factors listed from the *Table C-1* notes.

TIMBER DEFECTS

3-48. Use extreme care when classifying timber-stringer bridges. Stringers and bents are subject to rot and insect attack, especially in areas where they come into contact with the ground. In tropical or wet areas, fungus or other biological growth may weaken timber stringers considerably. Adjust the cross-sectional dimensions of the member to allow for this type of damage.

STRINGER MOMENT-CLASSIFICATION PROCEDURE

3-49. Determine the moment classification of the stringers *(paragraph 3-34)* using the allowable bending stress *(paragraph 3-46)* and the value for the number of effective stringers from *Table 3-3, page 3-14*. For one- and two-way traffic, compute the moment classification twice, using the appropriate values for each way.

STRINGER SHEAR-CLASSIFICATION PROCDURE

3-50. Timber is relatively weak in horizontal shear. Always check the shear capacity. Determine the allowable shear stress as discussed in *paragraphs 3-46* and *3-47*.

Shear Capacity per Stringer

3-51. Compute the shear capacity per stringer as follows:

$$v = A_v F_v \tag{3-6}$$

where—

v = *shear capacity per stringer, in kips*

A_v = *effective shear area of the stringer, in square inches (Tables C-4 and C-5, pages C-9 and C-10)*

F_v = *allowable shear stress, in ksi (paragraphs 3-46 and 3-47)*

Applied Dead-Load Shear per Stringer

3-52. Compute the dead-load shear per stringer as follows:

$$v_{DL} = \frac{w_{DL}L}{2}\left(1 - \frac{d}{6L}\right) \tag{3-7}$$

where—

v_{DL} = *dead-load shear per stringer, in kips*
w_{DL} = *applied dead load per foot of stringer, in kpf (equation 3-1)*
L = *span length, in feet*
d = *stringer depth, in inches*

Live-Load Shear Capacity per Stringer

3-53. Compute the live-load shear capacity per stringer as follows:

$$v_{LL} = v - v_{DL} \tag{3-8}$$

where—

v_{LL} = *live-load shear capacity per stringer, in kips*
v = *shear capacity per stringer, in kips (equation 3-6)*
v_{DL} = *dead-load shear per stringer, in kips (equation 3-7)*

Total Live-Load Shear for One or Two Lanes

3-54. For wheeled and tracked vehicles on solid-sawn timber bridges and for wheeled vehicles on glue-laminated bridges, use the following equation:

$$V_{LL} = 5.33 v_{LL} \left[\frac{1}{0.6 + \left(\frac{2}{N_{1,2}} \right)} \right] \tag{3-9}$$

where—

V_{LL} = *allowable vehicle shear, in kips*
v_{LL} = *live-load shear capacity per stringer, in kips (equation 3-8)*
$N_{1,2}$ = *effective number of stringers from Table 3-3. Use N_1 for one-lane traffic or N_2 for two-lane traffic.*

3-55. For tracked vehicles on glue-laminated stringer bridges, use the equations below:

- **One-way traffic.**

  $$V_{LL} = 2 v_{LL} \tag{3-10}$$

  where—

  V_{LL} = *allowable vehicle shear, in kips*
  v_{LL} = *live-load shear capacity per stringer, in kips (equation 3-8)*

- **Two-way traffic.**

  $$V_{LL} = \left(\frac{S_s}{S_s - 2} \right) v_{LL} \tag{3-11}$$

  where—

  V_{LL} = *allowable vehicle shear, in kips*

S_s = *stringer spacing, in feet*

v_{LL} = *live-load shear capacity per stringer, in kips (equation 3-8)*

Shear Determination

3-56. Using the value for the allowable vehicle shear *(equations 3-9, 3-10, or 3-11),* refer to *Table B-3, pages B-10* through *B-13,* or *Figures B-3* or *B-4, pages B-17* and *B-18,* and find the MLC that produces a shear less than or equal to this value. If considering both one- and two-way traffic, compute twice, using the appropriate values for each way.

DECK CLASSIFICATION

3-57. Timber decks are either plank (wide dimension, laid horizontal with no interconnection between the planks) or laminated (wide dimension, laid vertical with the boards nailed or glued together). If timber decks control the load rating, check them.

Plank Decking

3-58. Use *Figure 3-13* to determine the deck classification. Read the deck thickness on the vertical axis and the stringer spacing on the horizontal axis. Interpret the values between the curves, if necessary. For multilayer plank decking, subtract 2 inches from the total deck thickness. Then use *Figure 3-13* to find the deck classification, which is the same as for single-layer decks.

Laminated Decking

3-59. Laminate the deck material to interconnect the adjacent boards in shear and allow them to share in the applied loadings more effectively. As a result, the applied wheel loads are effectively spread out to more deck boards than with a conventional plank deck. This increases the deck's rating over that of a plank deck with the same thickness.

3-60. For load-rating purposes, lamination indirectly has the effect of shortening the deck span between stringers by about 25 percent. Therefore, if the deck is effectively laminated (well nailed or glued over the full length of the boards), multiply the actual stringer spacing by 0.75 and use *Figure 3-13* to find the deck classification.

WIDTH AND FINAL CLASSIFICATIONS

3-61. Check the width restrictions (*paragraph 3-44* and *Table 3-4, page 3-18*). The lowest of the moment, shear, deck, or two-lane width classifications is the bridge's final classification.

STEEL-STRINGER BRIDGES

3-62. Steel stringers may consist of standard rolled shapes (more common in spans that are less than 100 feet) or of built-up sections from welded, bolted, or riveted steel plates (which are used for longer spans). *Figure 3-14, page 3-24,* shows a steel-stringer bridge. Rolled and built-up stringers may have cover plates in areas of maximum positive and negative moment (*Figure 3-15, page 3-24*). These plates increase the beam's section modulus and thus increase the allowable load. Because of the highly varied dimensions

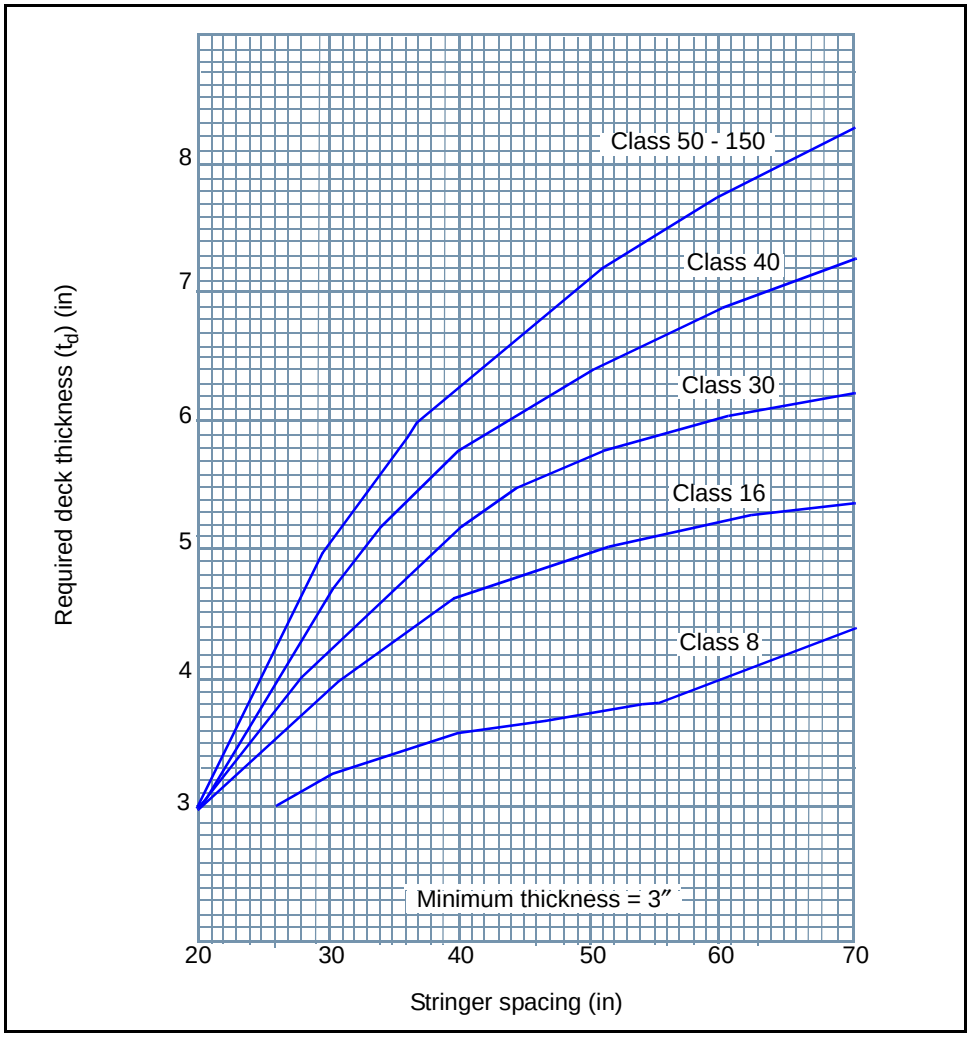

Figure 3-13. Timber-Deck Classification

and details associated with steel-stringer bridges, accurate analytical classification of steel-stringer bridges is difficult without complete design or as-built data.

YIELD AND ALLOWABLE STRESSES

3-63. Allowable stresses are always given as percentages of the yield strength of steel. Consider the following:

- If the bridge's design or as-built drawings are available, the yield strength should be listed.
- If the yield strength is unknown, use the recommended values in *Table 3-5, page 3-25*.
- If the steel type or the date the bridge was built is not known, use 30 ksi.

Once the yield strength is determined, determine the allowable stresses using *Table 3-6, page 3-25*.

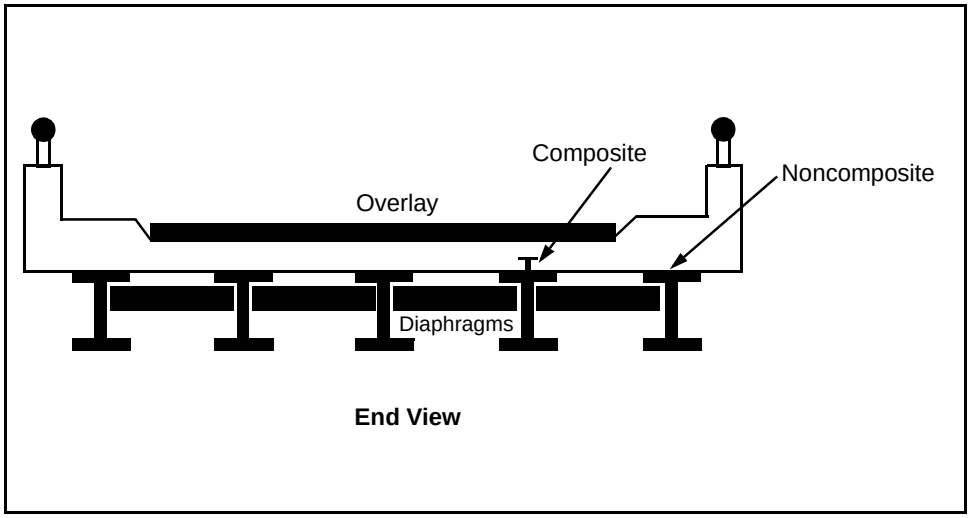

Figure 3-14. Steel-Stringer Bridge

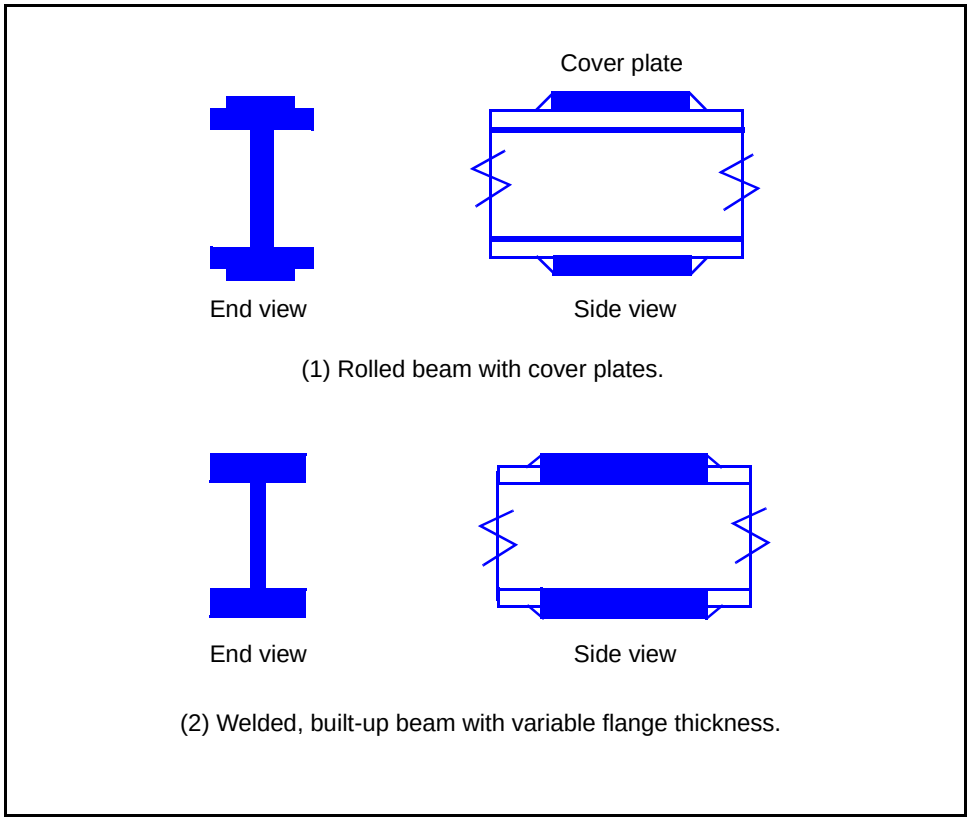

Figure 3-15. Typical Steel Stringers

Table 3-5. Yield Stresses of Steel

Designation	Approximate Date Bridge was Built (Steel is Unknown)				Known Steels				
	Before 1905	1905 to 1936	1937 to 1963	After 1963	Carbon	Silicon (>2″ to ≤4″)	Nickel	≤1 1/8″	>1 1/8″ to ≤2″
AASHTO	—	—	—	—	M94	M95	M96	—	—
ASTM	—	—	—	—	A 7	A 94	A 8	A 94	A 94
Steel yield strength (F_y), in ksi	26	30	33	36	33	45	55	50	47

Table 3-6. Allowable Stresses for Steel

Stress Condition	Allowable
1. Axial	$F_t = 0.75F_y$
2. Tension in extreme fibers of all rolled shapes, girders, and built-up sections causes bridges to be subject to bending. Compression in extreme fibers of those members is not an issue in developed countries because original designs were accomplished by engineers using established bridge-design criteria that provided proper detailing to prevent local and lateral-torsional buckling.	$F_b = 0.75F_y$
3. For those members where the quality of the original design is suspect or where deterioration/ removal of lateral bracing has occurred, determine the allowable compression in extreme fibers of members in bending as follows:	
(a) Supported laterally its full length. The following deck conditions are considered to provide full lateral support: Concrete decks on top of compression flange of beam (embedded or not). Corrugated metal decks on top of compression flange of beam. Laminated timber decks on top of compression flange of beam.	$F_b = 0.75F_y$
(b) Partially laterally braced, where the unbraced length does not exceed either of the following: $\frac{76b_f}{\sqrt{F_y}}$ or $\frac{20{,}000A_f}{dF_y}$ (values are in inches) *where—* b_f = *flange width, in inches* A_f = *area of flange, in inches* d = *total depth of the beam, in inches* F_y = *steel yield strength, in ksi*	$F_b = 0.75F_y$
(c) Unbraced length exceeds the limits in (b) above. The value of F_b should be conservative for military TO bridges. If a less conservative value is needed, make a more accurate assessment of F_b by using local design codes. This process is often complex. If required, use the operating level of stress to account for the lower traffic volumes and speeds associated with military TO bridges.	$F_b = 0.55F_y$
4. Shear in webs of rolled shapes, girders, and built-up sections (use gross section of web only).	$F_b = 0.45F_y$
LEGEND: F_b = maximum allowable bending stress of the member, in ksi F_t = allowable tension in the axially loaded member, in ksi F_y = steel yield strength, in ksi	

STRINGER MOMENT-CLASSIFICATION PROCEDURE

3-64. Compute the moment classification of the stringers *(paragraph 3-34)*. Use the allowable bending stress *(paragraph 3-63)* and the appropriate value for the number of effective stringers from *Table 3-3, page 3-14*. If considering both one-way and two-way traffic, compute twice, using the appropriate values for each way. To classify built-up stringers, use the dimensions of the beam at the center of the span (the point of maximum positive moment).

DECK CLASSIFICATION

3-65. Decks distribute the live load to the stringers. Decks do not contribute to the moment capacity of the steel stringers unless composite construction is used. Reinforced concrete and steel-grid decks are used in civilian construction. Both decks are seldom critical in bridge classification. Classify timber decks as outlined in *paragraph 3-57*.

WIDTH AND FINAL CLASSIFICATIONS

3-66. Check the width restrictions (*paragraph 3-44* and *Table 3-4, page 3-18*). The lowest of the moment, deck, or two-lane width classifications is the bridge's final classification.

COMPOSITE-STRINGER BRIDGES

3-67. Composite-stringer bridges are difficult to recognize or distinguish from noncomposite steel-stringer bridges. If in doubt, classify the bridge as a noncomposite steel-stringer bridge, which results in a more conservative classification. *Appendix F* contains classification examples.

COMPOSITE -BEAM ACTION

3-68. When structurally connected, the concrete deck and steel stringer form a composite beam. *Figure 3-16* shows a typical composite beam using a standard rolled beam and cover plate. The top flange takes maximum advantage of the compressive strength of the concrete deck. The bottom flange and cover plate are efficiently used in tension. Shear connectors or studs connect the concrete to the steel stringer and resist the horizontal shear forces between the concrete and the top flange.

SUPPORTED AND UNSUPPORTED CONSTRUCTION

3-69. During construction, steel beams are placed on the supports with cranes. The concrete-deck formwork is then constructed on top of these beams and the concrete deck is poured. During the deck placement, the steel beams may or may not have beam shoring along their length (supported or unsupported). If the beams are shored (supported) until the concrete of the deck cures, the resulting composite beam will be effective for the entire dead load of both the beam and slab, as well as live loads. If the beams are unshored (unsupported) during construction, then the steel beam by itself must support its own dead load, and the composite beam section will only be effective for the dead load of the deck and live loads. Normally, the cost of shoring is not practical when compared with the small increase in material costs required for unsupported construction. Unless the method of

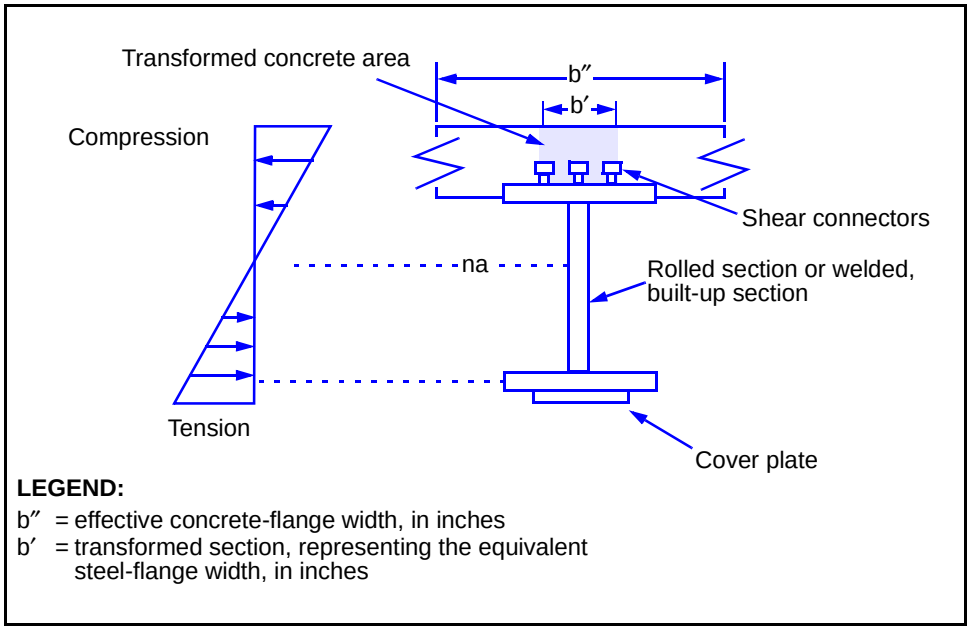

Figure 3-16. Composite-Beam Section

construction is definitely known, assume that unsupported construction methods were used. The analytical procedure shown below makes this assumption.

MOMENT-CLASSIFICATION PROCEDURE

3-70. The total moment that the composite beam resists, assuming unsupported construction, has two parts. They are the dead-load moment (that the steel beam alone resists) and the live-load moment (that the composite beam resists).

Dead-Load Moment

3-71. Determine the dead-load moment per stringer (*paragraph 3-35*). Note that the stringer must carry its own weight plus the weight of a portion of the concrete deck.

Stringer Section Modulus

3-72. Determine S_{steel}, which is the section modulus for the steel stringer by itself. Refer to *Table D-2, pages D-3* and *D-4*.

Effective Concrete-Flange Width

3-73. The effective width of the concrete flange is the lesser value of the following:

- One-fourth the span length, in inches (reduce the span length by 20 percent for continuous spans).
- Twelve times the concrete-flange thickness, in inches.
- The center-to-center stringer spacing, in inches.

Equivalent Steel-Flange Width

3-74. The concrete-flange width is represented as an equivalent steel-flange width for section-modulus calculations. Compute the equivalent steel-flange width as follows:

$$b' = \frac{b''}{r_m} \quad (3\text{-}12)$$

where—

b' = *transformed section representing the equivalent steel-flange width, in inches*

b'' = *effective concrete-flange width, in inches (paragraph 3-73)*

r_m = *modular ratio (Table 3-7)*

Table 3-7. Modular Ratios

Modular Ratio (r_m)	Concrete Strength (f'c)
15	2.0 to 2.4 ksi
12	2.5 to 2.9 ksi
10	3.0 to 3.9 ksi
8	4.0 to 4.9 ksi
6	5.0 ksi or more

Section Modulus of Composite Section

3-75. Compute $S_{composite}$, which is the section modulus of the entire composite beam (including the concrete deck) with respect to the bottom of the stringer. Use the methods described in *paragraph D-14* to compute the section modulus or use the value from *Table D-8, page D-8*.

Stress Due to Dead Load

3-76. Compute the stress induced in the steel by the dead-load moment as follows:

$$F_{DL} = \frac{m_{DL}12}{S_{steel}} \quad (3\text{-}13)$$

where—

F_{DL} = *stress induced in the steel by the dead-load moment, in ksi*

m_{DL} = *dead-load moment per stringer, in kip-feet (equation 3-3)*

S_{steel} = *steel's section modulus, in cubic inches (paragraph 3-72)*

Live-Load Moment per Stringer

3-77. Compute the live-load moment per stringer as follows:

$$m_{LL} = \frac{(F_b - F_{DL})S_{composite}}{(1+x)12} \quad (3\text{-}14)$$

where—

m_{LL} = *live-load moment per stringer, in kip-feet*
F_b = *allowable bending stress, in ksi (Table 3-6, page 3-25)*
F_{DL} = *stress in the steel induced by dead-load moment, in ksi (equation 3-13)*
$S_{composite}$ = *section modulus of the composite section, in cubic inches (paragraph 3-75)*
x = *impact factor (0.15 for steel or concrete)*

Final-Moment Determination

3-78. Use the procedure shown in *paragraph 3-34* to compute the remainder of the moment classification.

WIDTH AND FINAL CLASSIFICATIONS

3-79. Check the width restrictions (*paragraph 3-44* and *Table 3-4, page 3-18*). The lowest of the moment, deck, or two-lane width classifications is the bridge's final classification.

STEEL-GIRDER BRIDGES

3-80. A steel-girder bridge consists of two main flexural members (girders) that are built from steel plates. In older bridges, the members are built up with riveted plates and angles and a floor beam supports the stringers and the deck. In some cases, stringers are omitted and the floor beams alone transmit deck loads to the girders. For load-classification purposes, check the capacities of the deck, the stringers, the floor beams, and the girders. The limiting values will determine the load classification. *Figure 3-17* shows a girder bridge. *Figure 3-18, page 3-30,* shows a through- and a deck-girder bridge. *Figure 3-19, page 3-30,* shows the main components of a girder bridge. *Appendix F* contains classification examples.

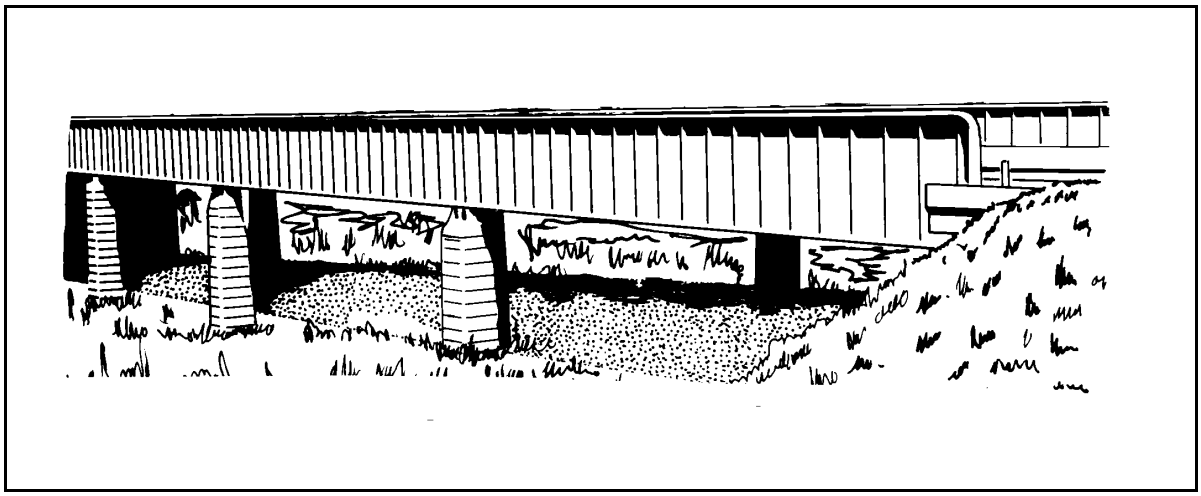

Figure 3-17. Girder Bridge

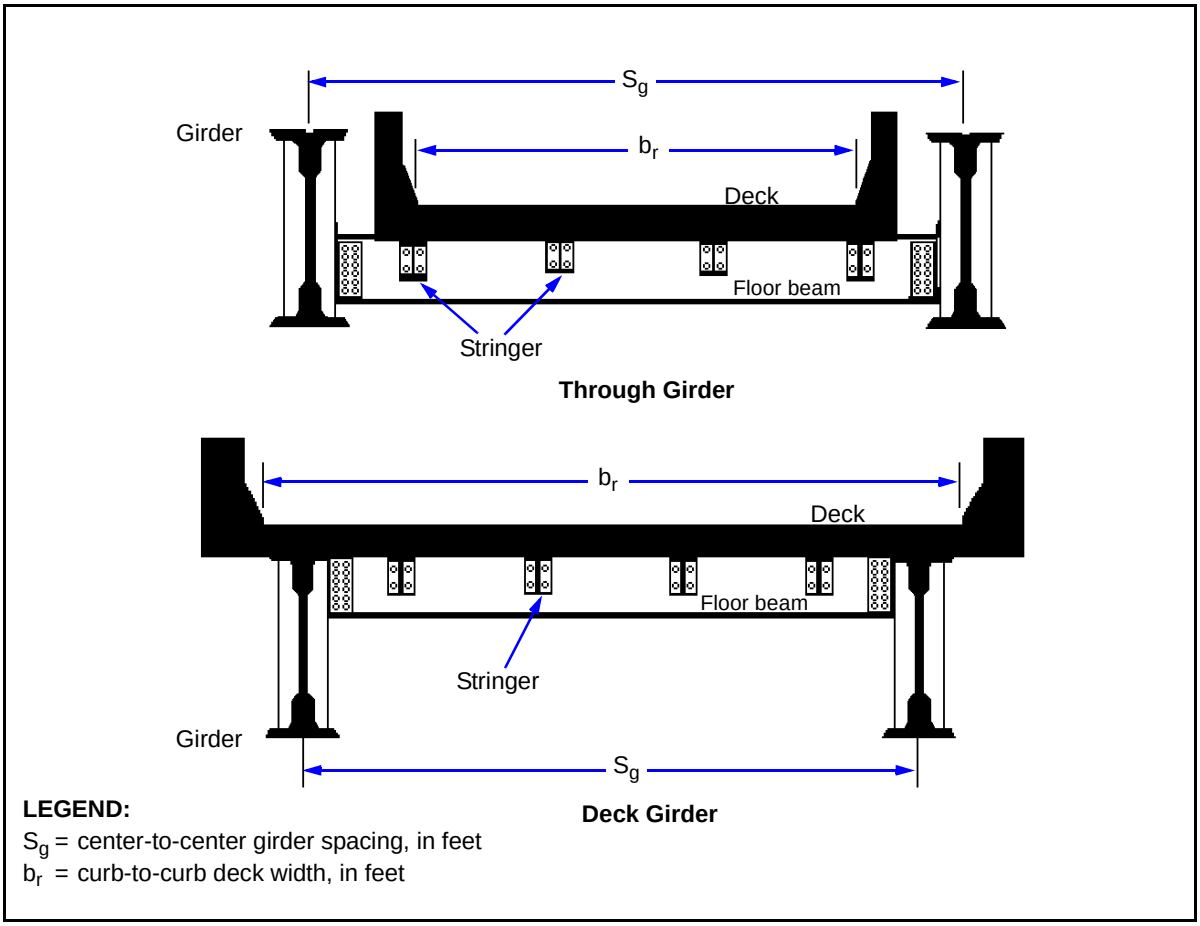

Figure 3-18. Girder Bridges

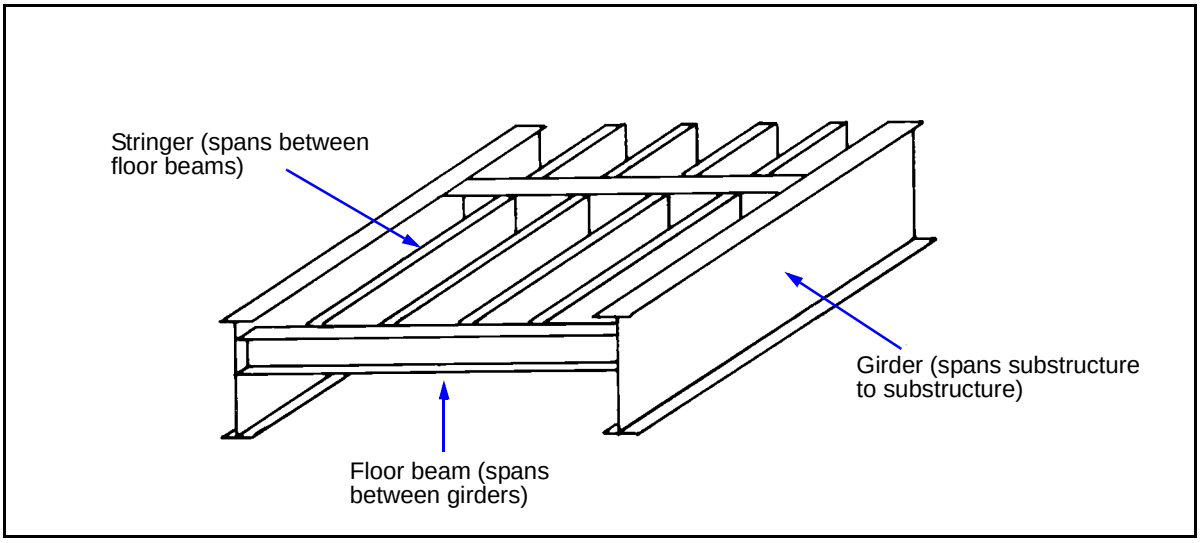

Figure 3-19. Girder-Bridge Components

YIELD AND ALLOWABLE STRESSES

3-81. Determine the yield and allowable stresses as shown in *Table 3-6, page 3-25*. This applies to all girder-bridge components discussed in the paragraphs below.

GIRDER CLASSIFICATION

3-82. Using the values below, determine the girder moment classification. If the girders are of composite construction, use the procedure in *paragraph 3-70*. Compute the yield and the allowable stresses from *Table 3-6*. Because there are no other checks required for steel girders (for example, shear), the resulting moment classification will be the only one.

Effective Number of Girders for One-Lane Traffic

3-83. Compute the maximum effective number of girders for one-lane traffic as follows:

$$N_1 = \frac{2S_g}{S_g + b_r - 10} \quad (3\text{-}15)$$

where—

N_1 = *maximum effective number of girders for one-lane traffic*
S_g = *center-to-center girder spacing, in feet*
b_r = *curb-to-curb roadway width, in feet*

Effective Number of Girders for Two-Lane Traffic

3-84. *Figure 3-20, page 3-32*, shows assumed loading conditions for normal two-lane bridges. Compute the number of girders for two-lane traffic using *equations 3-16* and *3-17*.

$$C_v = b_r - 2S_e - 3 \geq 2\ ft \quad (3\text{-}16)$$

where—

C_v = *minimum spacing between vehicles in adjacent lanes, in feet*
b_r = *curb-to-curb roadway width, in feet*
S_e = *7 feet or the actual axle width (center-to-center spacing of the tires or tracks for the desired vehicle)*

$$N_2 = \frac{S_g}{S_g + b_r - 17 - C_v} \quad (3\text{-}17)$$

where—

N_2 = *maximum effective number of girders for two-lane traffic*
S_g = *center-to-center girder spacing, in feet*
b_r = *curb-to-curb roadway width, in feet*
C_v = *minimum spacing between vehicles in adjacent lanes, in feet (equation 3-16)*

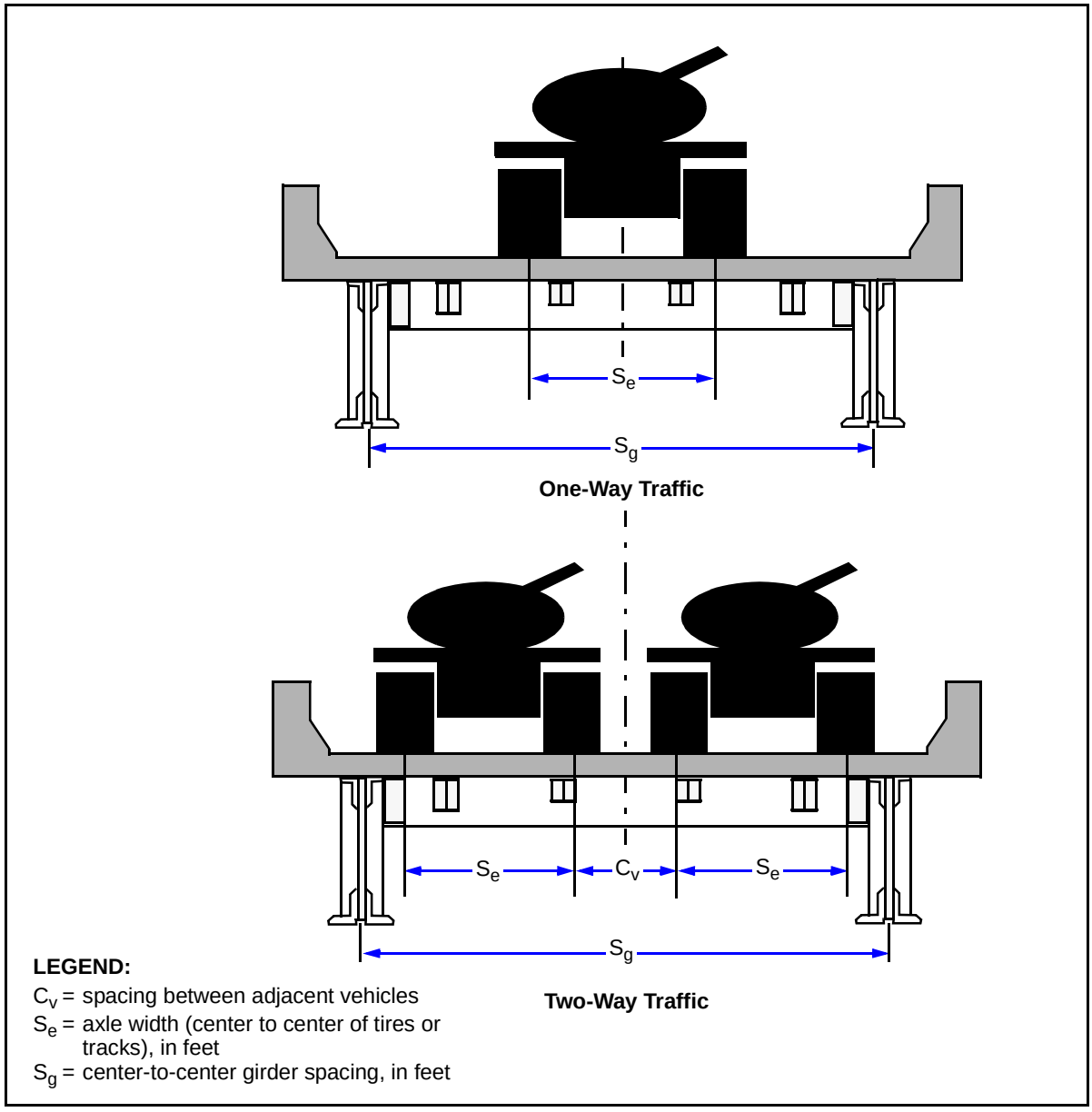

Figure 3-20. Assumed Loading Conditions for Maximum Moment in Floor Beams

3-85. For bridges with more than two lanes, the value of the minimum spacing between vehicles in adjacent lanes will generally be too conservative. In these cases, an engineer should determine the spacing requirement based on the—

- Actual curb-to-curb width.
- Expected travel lanes for the convoys.
- Presence of median strips and convoy speed.
- Degree of traffic control.

Total Moment Capacity per Girder

3-86. Compute the total moment capacity of one girder as follows:

$$m = \frac{F_b S}{12} \tag{3-18}$$

where—

m = *total moment capacity of one girder, in kip feet*
F_b = *allowable bending stress of the member, in ksi (paragraph 3-63)*
S = *section modulus of one girder, in cubic inches (paragraph D-12)*

Dead Load per Girder

3-87. Use *equations 3-19* through *3-21* to compute the various components of the uniform dead load per girder and use *equation 3-22* to compute the total dead load per girder.

$$w_{FS} = \left[(t_d W_d \gamma_d) + (t_{ov} b_r \gamma_{ov}) + \left(\frac{\gamma_s A_s N_s}{12}\right) + \left(\frac{\gamma_f A_f S_g}{12 S_f}\right)\right] \frac{S_f (N_f - 1)}{12{,}000 N_g L_g} \tag{3-19}$$

where—

w_{FS} = *uniform dead load on the girder due to the deck, stringers, and floor beams, in kpf*
t_d = *deck thickness, in inches*
W_d = *total deck width (including curbs), in feet*
γ_d = *unit weight of deck material, in pounds per cubic foot (Table 3-2, page 3-13)*
t_{ov} = *deck overlay thickness (if present), in inches*
b_r = *curb-to-curb width, in feet*
γ_{ov} = *unit weight of deck overlay material, in pounds per cubic foot (Table 3-2)*
γ_s = *unit weight of stringer material, in pounds per cubic foot (Table 3-2)*
A_s = *cross-sectional area of a stringer, in square inches (Table D-2, pages D-3 and D-4)*
N_s = *number of stringers across the width of the bridge*
γ_f = *unit weight of floor-beam material, in pounds per cubic foot (Table 3-2)*
A_f = *cross-sectional floor-beam area, in square inches (Table D-2)*
S_g = *center-to-center girder spacing or floor-beam length, in feet*
S_f = *center-to-center floor-beam spacing, in feet*
N_f = *total number of floor beams on the bridge, including those at the ends of the span*
N_g = *total number of girders (normally equal to 2)*
L_g = *length of a girder (should equal the bridge-span length). Do not use equivalent span length in this equation.*

$$w_g = \frac{\gamma_g A_g}{144{,}000} \tag{3-20}$$

where—

w_g = *uniform dead load due to the girder itself, in kpf*

γ_g = *unit weight of girder material, in pounds per cubic foot (Table 3-2, page 3-13)*
A_g = *cross-sectional area of a girder, in square inches (Table D-2, pages D-3 and D-4)*

$$w_b = \frac{\gamma_b A_b L_b N_b}{N_g L_g 144{,}000} \quad (3\text{-}21)$$

where—

w_b = *uniform dead load due to lateral bracing of floor stringers, in kpf*
γ_b = *unit weight of lateral brace material, in pounds per cubic foot (Table 3-2)*
A_b = *cross-sectional area of a typical brace, in square inches (Table D-2)*
L_b = *length of a typical lateral brace, in feet (if lengths vary, choose the longest)*
N_b = *total number of lateral braces (do not count those at abutments or piers)*
N_g = *total number of girders (normally equal to 2)*
L_g = *length of a girder (should equal the bridge-span length). Do not use equivalent span length in this equation.*

$$w_{DL} = w_{FS} + w_g + w_b \quad (3\text{-}22)$$

where—

w_{DL} = *total uniform dead load along the length of the girder, in kpf*
w_{FS} = *uniform dead load on the girder due to the deck, stringers, and floor beams, in kpf (equation 3-19)*
w_g = *uniform dead load due to the girder itself, in kpf (equation 3-20)*
w_b = *uniform dead load due to lateral bracing of floor stringers, in kpf (equation 3-21)*

Dead-Load Moment per Girder

3-88. Compute the dead-load moment per girder as follows:

$$m_{DL} = \frac{w_{DL} L^2}{8} \quad (3\text{-}23)$$

where—

m_{DL} = *dead-load moment per girder, in kip-feet*
w_{DL} = *total dead load per girder, in kpf (equation 3-22)*
L = *span length, in feet (use equivalent span length for continuous spans) (paragraph 3-42)*

Live-Load Moment per Girder

3-89. Compute the live-load moment per girder as follows:

$$m_{LL} = \frac{m - m_{DL}}{1 + x} \quad (3\text{-}24)$$

where—

m_{LL} = *live-load moment per girder, in kip-feet*
m = *total moment capacity, in kip-feet (equation 3-18)*

m_{DL} = *dead-load moment per girder, in kip-feet (equation 3-23)*
x = *impact factor (0.15 for steel)*

Total Live-Load Moment per Lane

3-90. Compute the total live-load moment per lane as follows:

$$M_{LL} = N_{1,2} m_{LL} \quad (3\text{-}25)$$

where—

M_{LL} = *total live-load moment per lane, in kip-feet*
$N_{1,2}$ = *effective number of girders, one- or two-lane traffic (equation 3-15 or 3-16)*
m_{LL} = *live-load moment per component, in kip-feet (equation 3-24)*

Moment Classification

3-91. Determine the moment classification for both wheeled and tracked vehicles and for one- and two-lane traffic. Use the hypothetical vehicle-moment tables or curves in *Table B-2, pages B-6* through *B-9,* or *Figures B-1* or *B-2, pages B-15* and *B-16.*

STRINGER MOMENT CLASSIFICATION

3-92. The stringers of a girder bridge act as a subspan that span the gap between the floor beams. The stringers are assumed to be simply supported with a span length equal to the center-to-center floor-beam spacing. Determine the stringer moment classification using the procedure found in *paragraph 3-64* for noncomposite construction and *paragraph 3-70* for composite construction. Compute the uniform dead load per stringer as follows:

$$w_{DL} = \left[(t_d S_s \gamma_d) + (t_{ov} S_s \gamma_{ov}) + \left(\frac{\gamma_s A_s}{12} \right) \right] \frac{1}{12{,}000} \quad (3\text{-}26)$$

where—

w_{DL} = *uniform dead load carried by the stringer, in kpf*
t_d = *deck thickness, in inches*
S_s = *center-to-center stringer spacing, in feet*
γ_d = *unit weight of deck material, in pounds per cubic foot (Table 3-2)*
t_{ov} = *deck overlay thickness (if present), in inches*
γ_{ov} = *unit weight of deck overlay material, in pounds per cubic foot (Table 3-2)*
γ_s = *unit weight of stringer material, in pounds per cubic foot (Table 3-2)*
A_s = *cross-sectional area of a stringer, in square inches (Table D-2)*

STRINGER SHEAR CLASSIFICATION

3-93. Shear will seldom be critical if the stringers sit on top of the floor beams. However, if the stringers are connected to the floor beams by bolts or rivets, check for shear as follows:

- **Shear capacity per stringer.**

$$v = A_v F_v \quad (3\text{-}27)$$

where—

v = *shear capacity per stringer, in kips*
A_v = *effective shear area of the stringer, in square inches (Table D-2, pages D-3 and D-4)*
F_v = *allowable shear stress, in ksi (paragraph 3-63)*

- **Dead-load shear per stringer.**

$$v_{DL} = \frac{w_{DL} S_f}{2} \quad (3\text{-}28)$$

where—

v_{DL} = *dead-load shear per stringer, in kips*
w_{DL} = *uniform dead load on the stringer, in kpf (equation 3-26)*
S_f = *center-to-center floor-beam spacing or the stringer span length, in feet*

- **Live-load shear capacity per stringer.**

$$v_{LL} = v - v_{DL} \quad (3\text{-}29)$$

where—

v_{LL} = *live-load shear capacity per stringer, in kips*
v = *shear capacity per stringer, in kips (equation 3-27)*
v_{DL} = *dead-load shear per stringer, in kips (equation 3-28)*

- **Total live-load shear, one and two lanes.**

$$V_{LL} = \frac{2 v_{LL}}{1.15} \quad (3\text{-}30)$$

where—

V_{LL} = *total live-load vehicle shear for one- or two-lane traffic, in kips*
v_{LL} = *live-load shear capacity per stringer, in kips (equation 3-29)*

- **Shear determination.** Use *Table B-3, pages B-10* through *B-13*, or *Figures B-3* or *B-4, pages B-17* and *B-18*, for classification.

FLOOR-BEAM MOMENT CLASSIFICATION

3-94. Floor beams run perpendicular to the line of traffic (*Figure 3-19, page 3-30*). Do not confuse these beams with stringers. The loading transmitted to a floor beam is a function of the span length (girder spacing), the floor-beam spacing, the dead load, and the weight and dimensions of the vehicles.

Total Moment Capacity of the Floor Beam

3-95. Compute the total moment capacity of the floor beam as follows:

$$m = \frac{F_b S}{12} \quad (3\text{-}31)$$

where—

m = *total moment capacity of the floor beam, in kip feet*
F_b = *allowable bending stress of the floor beam, in ksi (paragraph 3-63)*
S = *section modulus of the floor beam, in cubic inches (Table D-2)*

Dead Load and Dead-Load Moment

3-96. The floor beam spans transversely across the bridge and supports the longitudinally spanning stringers and the deck above. Thus, in addition to its own self-weight, the floor beam must also support that part of the dead weight of the deck and stringers. Thus, compute the uniform dead load on the floor beam as follows:

$$w_{DL} = \left[(t_d W_d \gamma_d) + (t_{ov} b_r \gamma_{ov}) + \left(\frac{\gamma_s A_s N_s}{12}\right) + \left(\frac{\gamma_f A_f S_g}{12 S_f}\right)\right] \frac{S_f}{12{,}000 S_g} \quad (3\text{-}32)$$

where—

w_{DL} = *uniform dead load on the floor beam, in kpf*
t_d = *deck thickness, in inches*
W_d = *total deck width (including curbs), in feet*
γ_d = *unit weight of deck material, in pounds per cubic foot (Table 3-2, page 3-13)*
t_{ov} = *deck overlay thickness (if present), in inches*
b_r = *curb-to-curb width, in feet*
γ_{ov} = *unit weight of deck overlay material, in pounds per cubic foot (Table 3-2)*
γ_s = *unit weight of stringer material, in pounds per cubic foot (Table 3-2)*
A_s = *cross-sectional area of a stringer, in square inches (Table D-2)*
N_s = *number of stringers across the width of the bridge*
γ_f = *unit weight of floor-beam material, in pounds per cubic foot (Table 3-2)*
A_f = *cross-sectional floor-beam area, in square inches (Table D-2)*
S_g = *center-to-center girder spacing or floor-beam length, in feet*
S_f = *center-to-center floor-beam spacing, in feet*

and—

$$m_{DL} = \frac{w_{DL} S_g^{\,2}}{8} \quad (3\text{-}33)$$

where—

m_{DL} = *dead-load moment per floor beam, in kip-feet*
w_{DL} = *uniform dead load on the floor beam, in kpf (equation 3-32)*
S_g = *center-to-center girder spacing or floor-beam length, in feet*

Live-Load Moment

3-97. Compute the live-load moment per component as follows:

$$m_{LL} = \frac{m - m_{DL}}{1 + x} \quad (3\text{-}34)$$

where—

m_{LL} = *live-load moment per component, in kip-feet*
m = *total moment capacity, in kip-feet (equation 3-31)*
m_{DL} = *dead-load moment per component, in kip-feet (equation 3-33)*
x = *impact factor (0.15 for steel or concrete)*

Maximum Allowable Floor-Beam Reactions

3-98. Compute the maximum allowable floor-beam reactions as follows (also see *Figure 3-20, page 3-32*):

- **One-way traffic.**

$$P_e = 2m_{LL}\left(\frac{1}{S_g - S_e}\right) \quad (3\text{-}35)$$

where—

P_e = *maximum allowable floor-beam reactions for one-way traffic, in kips*
m_{LL} = *live-load moment per component, in kip-feet (equation 3-34)*
S_g = *center-to-center girder spacing or floor-beam length, in feet*
S_e = *axle width (center to center of tires or tracks), in feet. S_e will either be the axle width of the vehicle from the previous controlling rating (deck, stringer, and so forth) or 7 feet, which will usually be conservative.*

- **Two-way traffic.**

$$P_e = m_{LL}\left(\frac{1}{S_g - S_e - C_v}\right) \quad (3\text{-}36)$$

where—

P_e = *maximum allowable floor-beam reactions for two-way traffic, in kips*
m_{LL} = *live-load moment per component, in kip-feet (equation 3-34).*
S_g = *center-to-center girder spacing or floor-beam length, in feet*
S_e = *axle width (center to center of tires or tracks), in feet. S_e will either be the axle width of the vehicle from the previous controlling rating (deck, stringer, and so forth) or 7 feet, which will usually be conservative.*
C_v = *spacing between adjacent vehicles, in feet (equation 3-16)*

Moment Classification

3-99. To determine the moment classification, refer to the floor-beam reaction curves in *Figures 3-21* through *3-24*, *pages 3-39* through *3-42*. Find the vehicle MLC (wheeled or tracked) which produces a maximum allowable floor-beam reaction that is equal to or less than the computed values from *equations 3-35* and *3-36*.

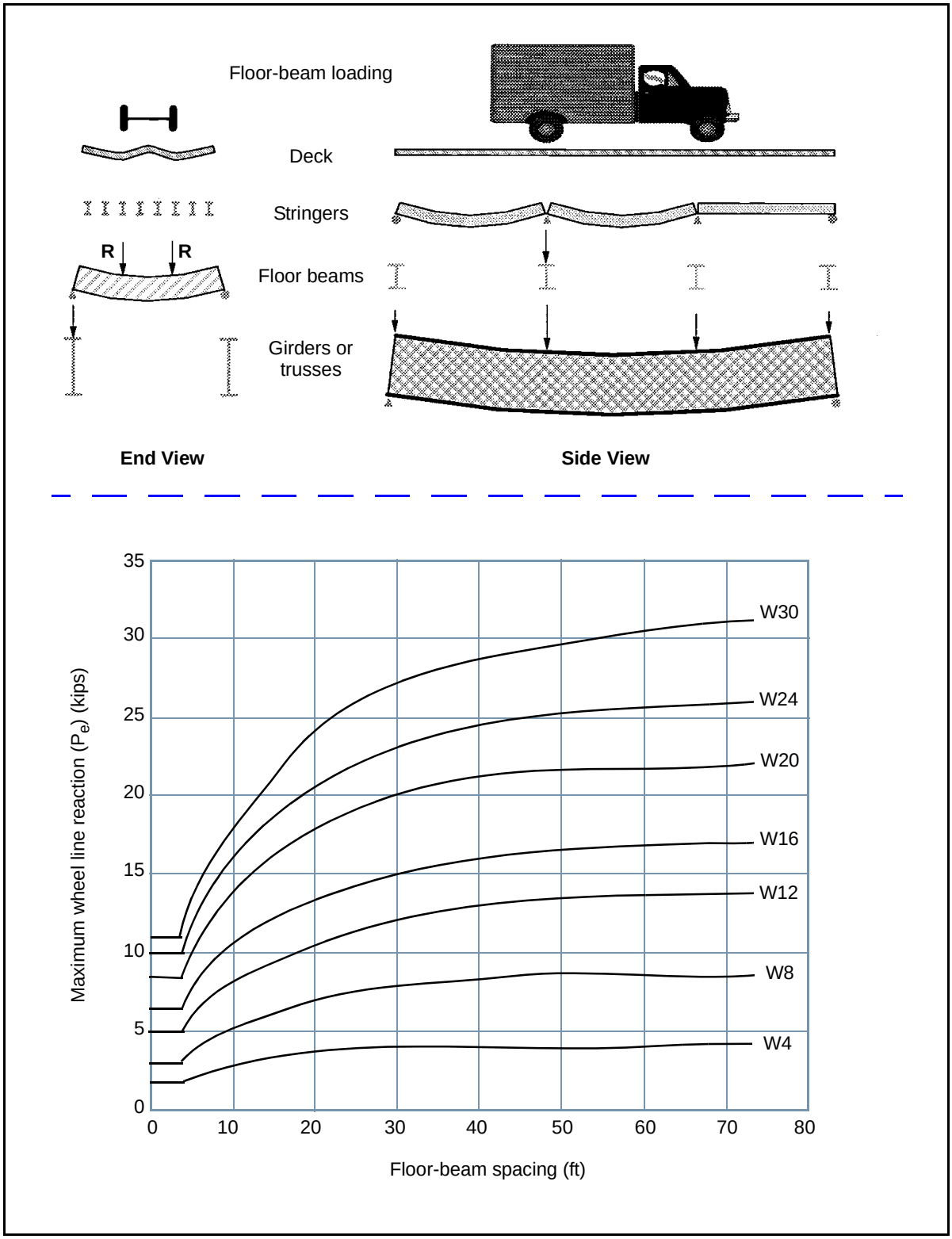

Figure 3-21. Maximum Wheel Line Reactions for Wheeled Vehicles (W4-W30)

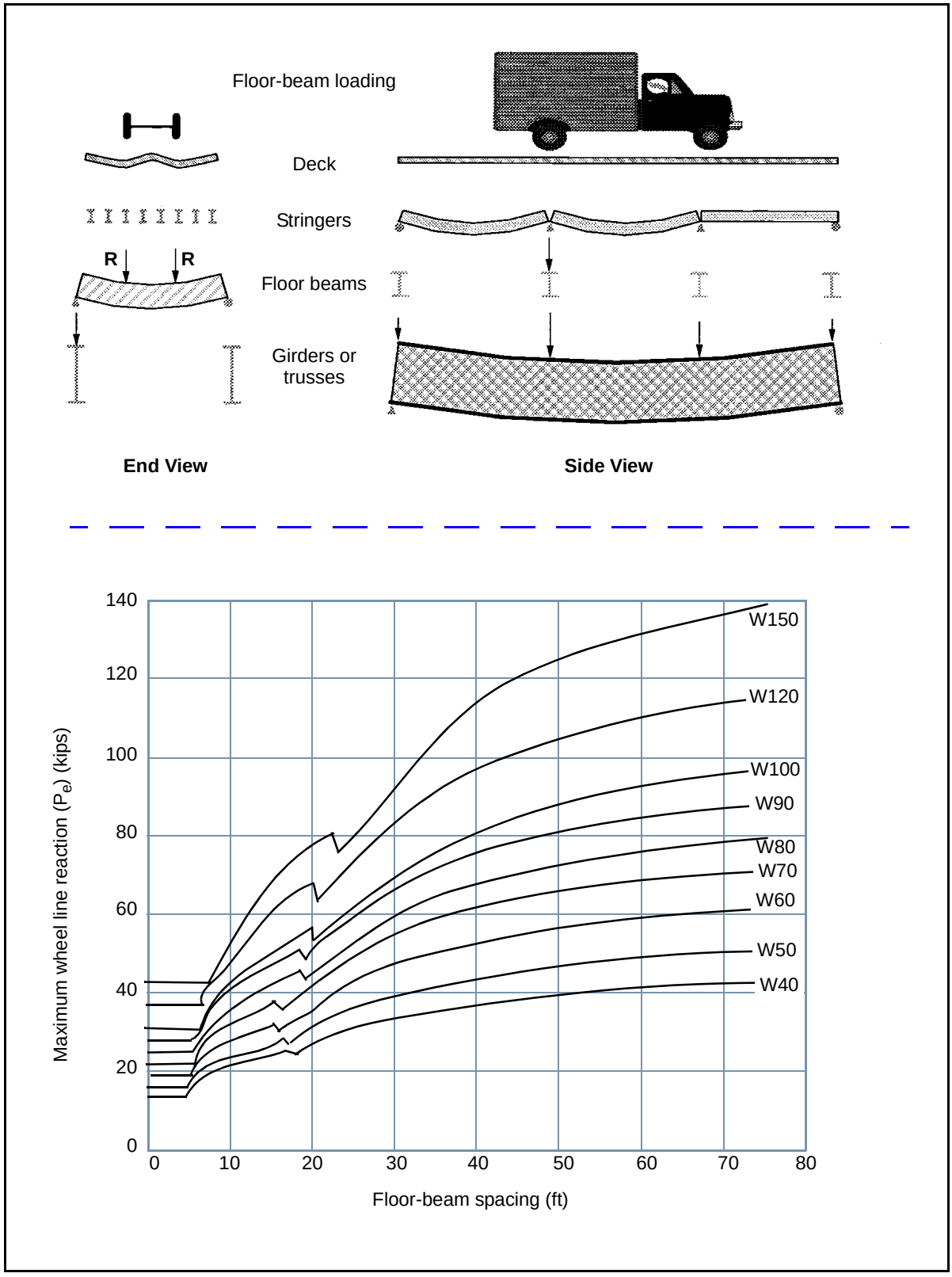

Figure 3-22. Maximum Wheel Line Reactions for Wheeled Vehicles (W40-W150)

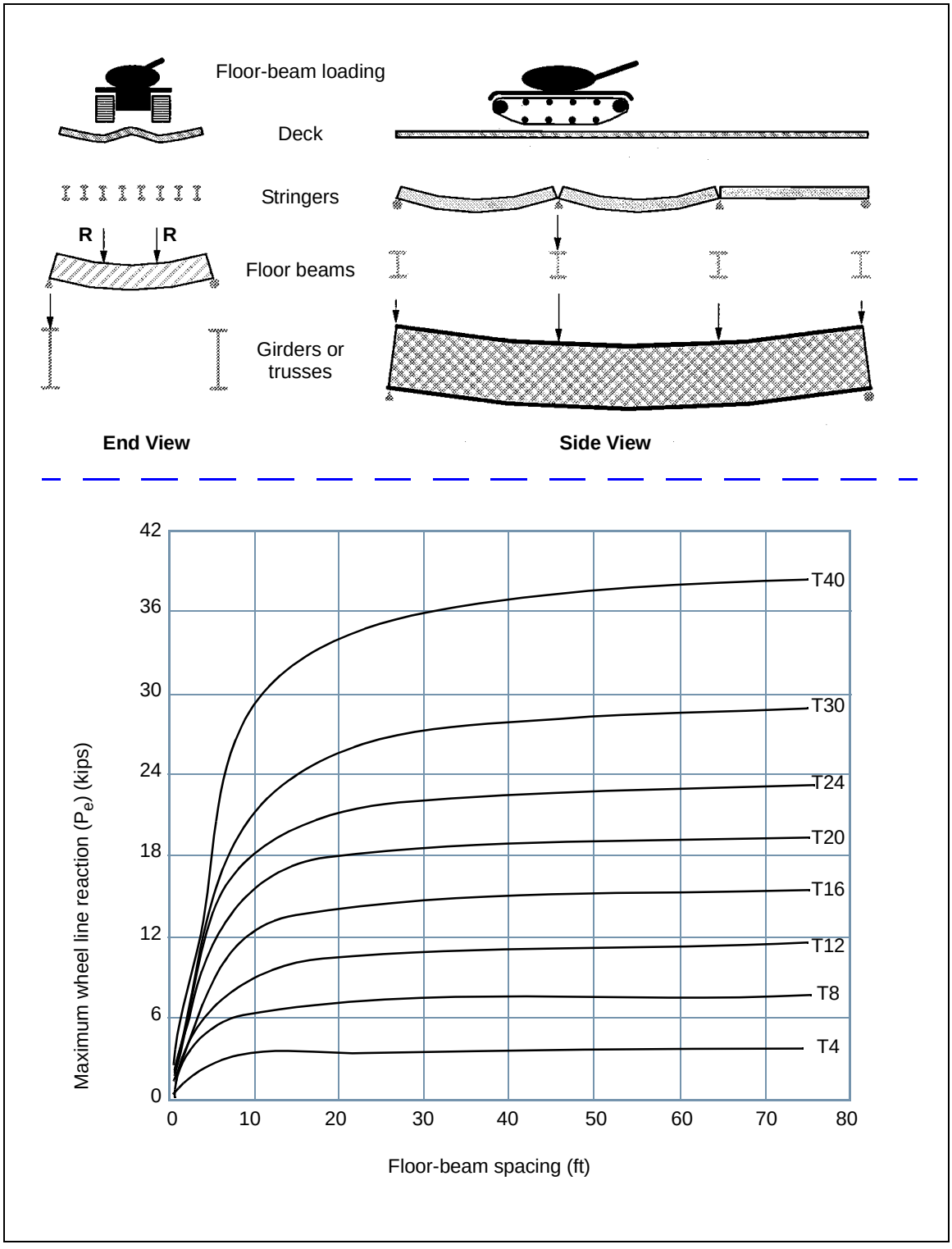

Figure 3-23. Maximum Wheel Line Reactions for Tracked Vehicles (T4-T40)

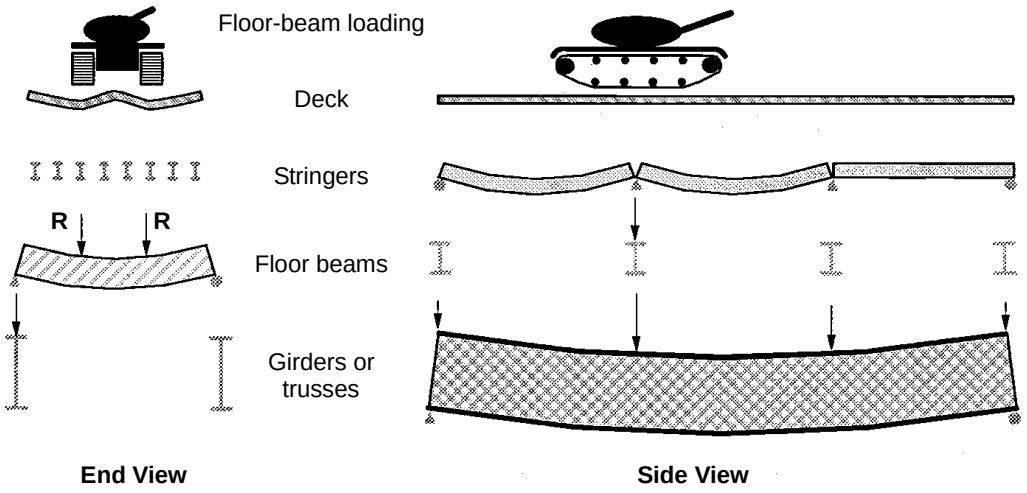

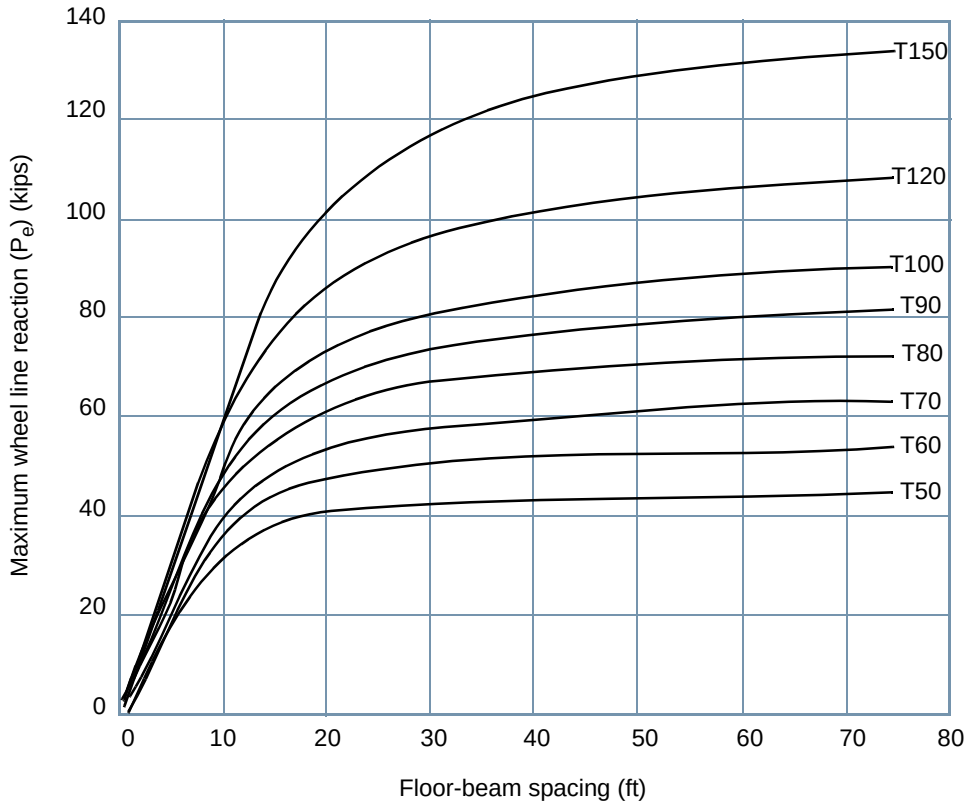

Figure 3-24. Maximum Wheel Line Reactions for Tracked Vehicles (T50-T150)

FLOOR-BEAM SHEAR CLASSIFICATION

3-100. Shear will seldom be critical if the floor beams bear directly on the supporting girders (not connected via bolts or rivets). However, if the floor beams are connected to the girders by bolts or rivets, check for shear as described below.

Shear Capacity per Floor Beam

3-101. Compute the shear capacity per floor beam as follows:

$$v = A_v F_v \tag{3-37}$$

where—

v = *shear capacity per floor beam, in kips*
A_v = *effective shear area of the floor beam, in square inches (Table D-2, pages D-3 and D-4)*
F_v = *allowable shear stress, in ksi (paragraph 3-63)*

Dead-Load Shear per Floor Beam

3-102. Compute the dead-load shear per floor beam as follows:

$$v_{DL} = \frac{w_{DL} S_g}{2} \tag{3-38}$$

where—

v_{DL} = *dead-load shear per floor beam, in kips*
w_{DL} = *uniform dead load on the floor beam, in kpf (equation 3-32)*
S_g = *center-to-center girder spacing or floor-beam length, in feet*

Live-Load Shear Capacity per Floor Beam

3-103. Compute the live-load shear capacity per floor beam as follows:

$$v_{LL} = \frac{v - v_{DL}}{1 + x} \tag{3-39}$$

where—

v_{LL} = *live-load shear capacity per floor beam, in kips*
v = *shear capacity per floor beam, in kips (equation 3-37)*
v_{DL} = *dead-load shear per floor beam, in kips (equation 3-38)*
x = *impact factor (0.15 for steel or concrete)*

Maximum Allowable Floor-Beam Reactions

3-104. Compute the maximum allowable floor-beam reactions for one-way and two-way traffic as follows:

- **One-way traffic.**

$$P_e = v_{LL} S_g \left(\frac{1}{S_g + b_r - 3.0 - S_e} \right) \geq v_{LL} \tag{3-40}$$

where—

P_e = *maximum allowable floor-beam reactions for one-way traffic, in kips*
v_{LL} = *live-load shear capacity per floor beam, in kips (equation 3-39)*
S_g = *center-to-center girder spacing or floor-beam length, in feet*
b_r = *curb-to-curb roadway width, in feet*
S_e = *axle width (center to center of tires or tracks), in feet. S_e will either be the axle width of the vehicle from the previous controlling rating (deck, stringer, and so forth) or 7 feet, which will usually be conservative.*

- **Two-way traffic.**

$$P_e = \frac{v_{LL}S_g}{2}\left[\frac{1}{S_g + b_r - 3.0 - 2S_e - C_v}\right] \geq 2v_{LL} \quad (3\text{-}41)$$

where—

P_e = *maximum allowable floor-beam reactions for two-way traffic, in kips*
v_{LL} = *live-load shear capacity per floor beam, in kips (equation 3-39)*
S_g = *center-to-center girder spacing or floor-beam length, in feet*
b_r = *curb-to-curb roadway width, in feet*
S_e = *axle width (center to center of tires or tracks), in feet. S_e will either be the axle width of the vehicle from the previous controlling rating (deck, stringer, and so forth) or 7 feet, which will usually be conservative.*
C_v = *spacing between adjacent vehicles, in feet (equation 3-16)*

Special Allowance for Caution Crossing

3-105. If the load rating for shear needs to be higher than the rating that was computed from *equations 3-40* and *3-41*, compute a special *caution-crossing* allowance using the equations below. These equations will provide the highest possible rating for floor-beam shear. However, for these equations to be effective, the convoys must be carefully monitored on the bridge. The drivers must drive as close to the center of their respective lanes as possible. If they cannot do this, do not use these equations.

- **One-way caution-crossing traffic.**

$$P_e = v_{LL} \quad (3\text{-}42)$$

where—

P_e = *maximum allowable floor-beam reactions for one-way traffic, in kips*
v_{LL} = *live-load shear capacity per floor beam, in kips (equation 3-39)*

- **Two-way caution-crossing traffic.**

$$P_e = \frac{v_{LL}}{2} \quad (3\text{-}43)$$

where—

P_e = *maximum allowable floor-beam reactions for two-way traffic, in kips*

v_{LL} = *live-load shear capacity per floor beam, in kips (equation 3-39)*

Shear Classification

3-106. Using the floor-beam reaction curves in *Figures 3-21* through *3-24, pages 3-39 through 3-42*, find the MLC (wheeled or tracked) which produces a maximum allowable floor-beam reaction that is equal to or less than the computed values from *equations 3-40* and *3-41*. For caution situations, use *equations 3-42* and *3-43*.

DECK, WIDTH, AND FINAL CLASSIFICATIONS

3-107. Consider the following when determining deck, width, and final classifications:

- Decks distribute the live load to the stringers. Decks do not contribute to the moment capacity of the steel stringers unless composite construction is used. Reinforced concrete and steel-grid decks are used in civilian construction and are seldom critical in bridge classification. Classify timber decks as outlined in *paragraph 3-57*.
- *Paragraph 3-44* and *Table 3-4, page 3-18*, apply to width restrictions.
- The final classification is the lowest of the girder, floor-beam, stringer, deck (if checked), or two-lane-width classification.

TRUSS BRIDGES

3-108. A truss *(Figure 3-25)* is a structure composed of straight members joined at their ends to form a system of triangles. It has the same function as the beams and girders and carries loads that produce bending moment in the structure as a whole. Many different types of trusses and truss combinations are used in long spans where beams and girders are not economical. These spans vary from 150 feet to over 1,000 feet. Some light truss bridges have simple spans as short as 60 feet.

3-109. Bending is resisted by the top chords in compression and the bottom chords in tension. Diagonals act as a web and resist shear. The end connections can be pinned, riveted, welded, or bolted. Pinned and riveted connections appear in the older structures, while the post-World War II structures have shop-welded and field-bolted connections.

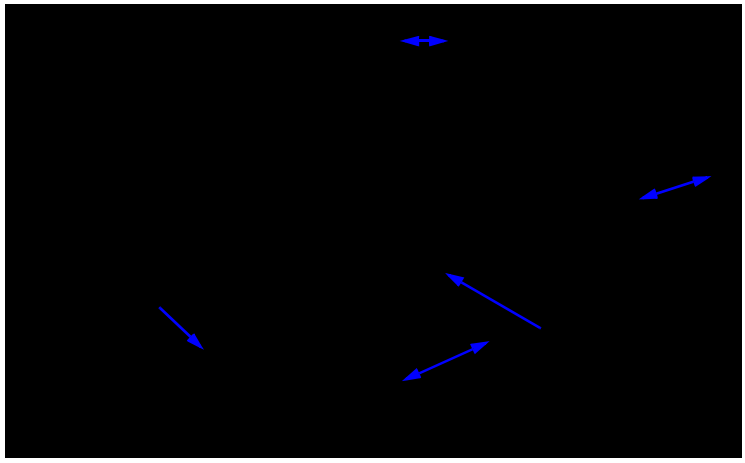

LEGEND:
L_x = unbraced length in the vertical direction
L_y = unbraced length in the horizontal direction

Figure 3-25. Truss Nomenclature

3-110. The floor system of a truss bridge *(Figure 3-26)* has floor beams that are connected at the panel points (intersection of diagonal truss members). The floor beams support floor stringers, which span between the floor beams and carry the load the same as those of a stringer bridge. For a proper analysis, the following types of truss and span configurations must be understood:

- **Pony truss.** A pony truss is a half-through truss that does not have an overhead bracing system and is normally used on relatively short spans *(Figure 3-27)*.

- **Through truss.** A through truss is used for longer spans and has an overhead bracing system. Traffic passes through the truss *(Figure 3-28).*

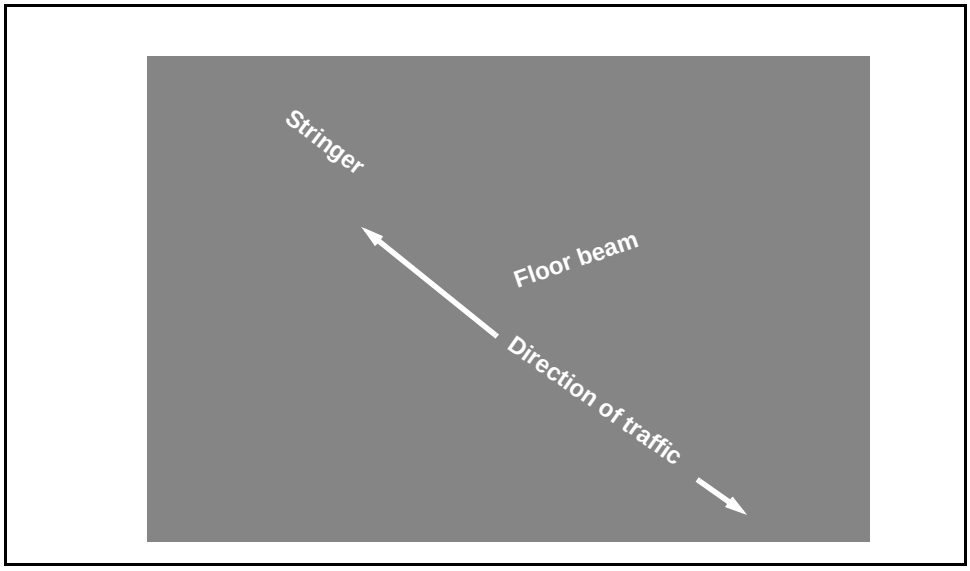

Figure 3-26. Truss Floor System

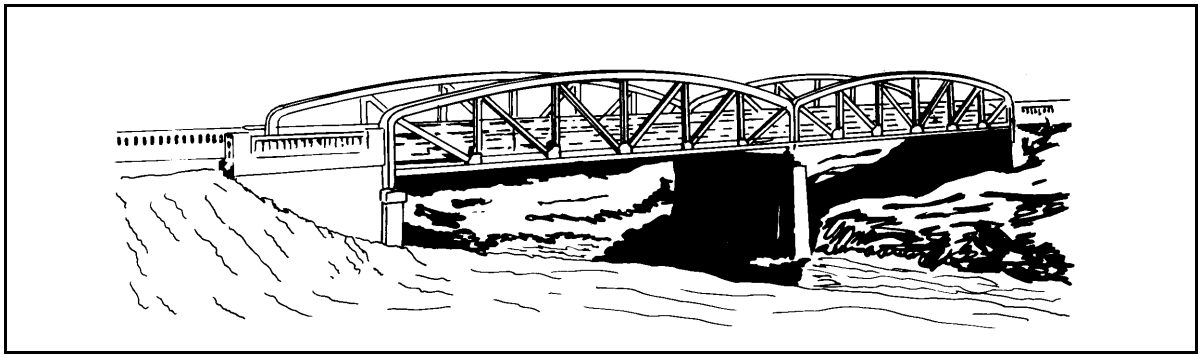

Figure 3-27. Pony-Truss Bridge

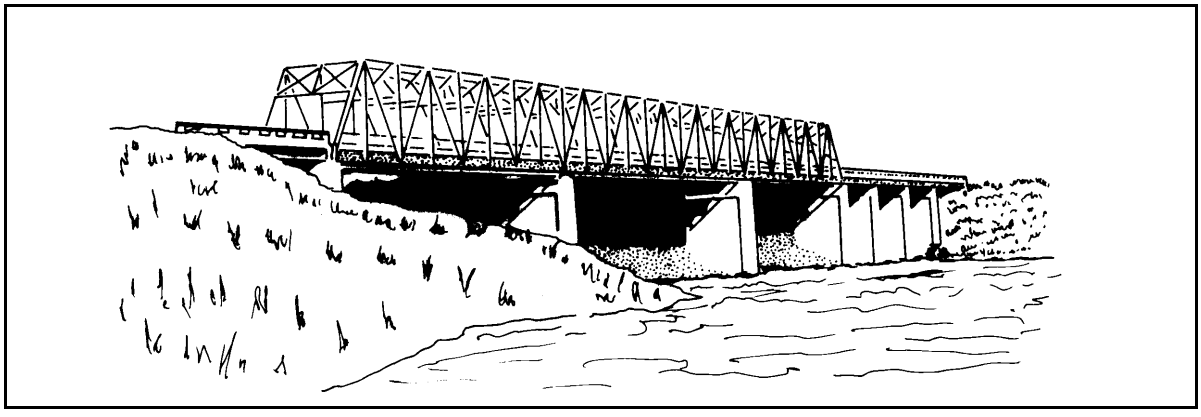

Figure 3-28. Through-Truss Bridge

- **Deck truss.** A deck truss is used for longer spans and carries the traffic on the top chord (the truss system is below the bridge deck) *(Figure 3-29).*

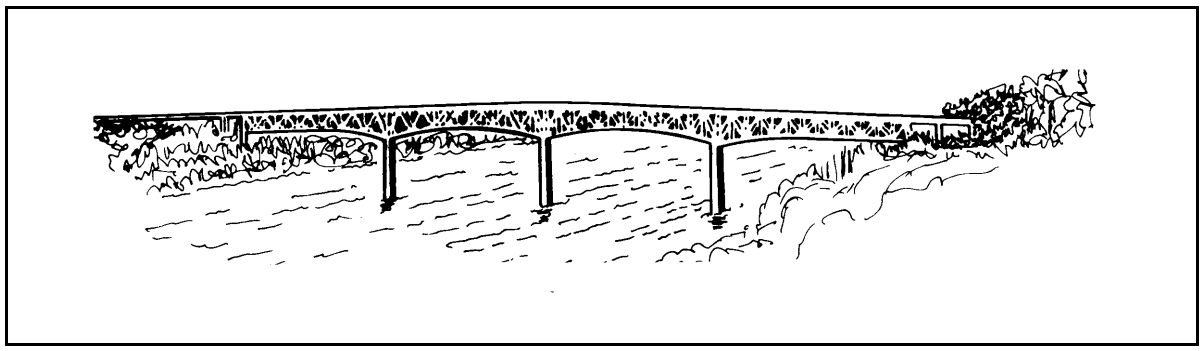

Figure 3-29. Deck-Truss Bridge

TRUSS SPANS

3-111. Trusses can be continuous over their interior supports *(Figure 3-30).* Refer to *paragraph 3-42* to determine the equivalent span length. Classify a continuous-truss bridge using the end span or the longest interior span, whichever controls.

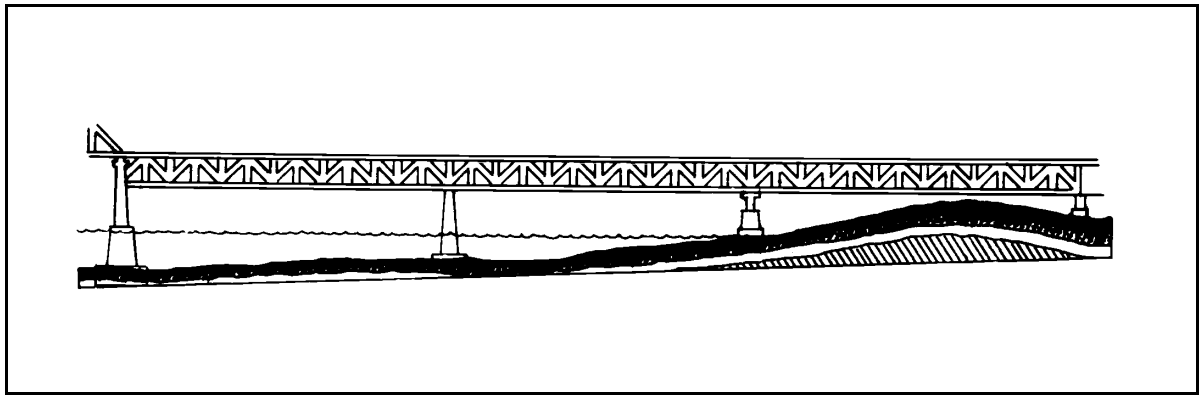

Figure 3-30. Constant-Section Continuous-Truss Bridge

3-112. Most of the long-span truss bridges use cantilevered construction *(Figure 3-31),* which consists of two end spans and a suspended span. The end spans are anchored to the abutment by an anchor arm, and a cantilever arm projects from the pier. A suspended span is hinged to the two ends of and supported between the cantilever arms. This type of bridge should be classified using the suspended span, assuming that the suspended span is simply supported between the supporting hinges. In some cases, hinges are not used but the suspended span can be identified by the geometry of the bridge. The suspended span extends between 3/8 and 1/2 of the clear span between the piers.

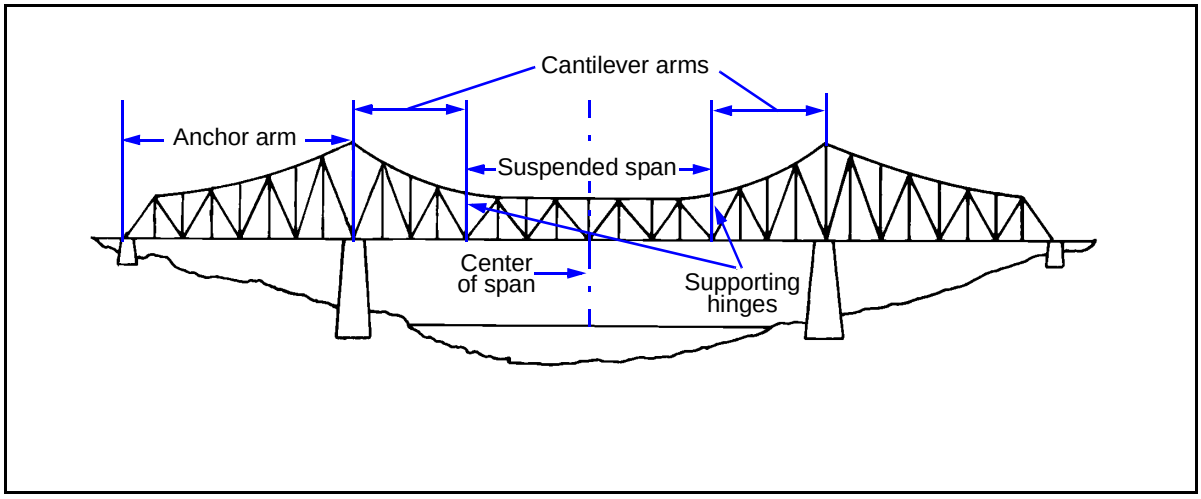

Figure 3-31. Suspended Truss Span

EXPEDIENT CLASSIFICATION

3-113. A complete reconnaissance of a truss bridge can be very time-consuming. If time or access to the bridge is limited, a reasonable expedient classification can be achieved by considering only the floor system (stringers and floor beams *[Figure 3-26, page 3-47]*). The floor system of a truss bridge is the same as that of a steel-girder bridge. Refer to *paragraphs 3-92* through *3-106* to rate the stringers and floor beams. If a quicker classification is needed, use the correlation-curve method (pay close attention to the span-length requirements of *paragraphs 3-13* and *3-14).*

ANALYTICAL CLASSIFICATION PROCEDURE

3-114. The analytical classification of a truss bridge consists of classifying the truss on the basis of positive moment capacity of the truss and checking the capacity of the floor beam and floor stringers.

Total Dead Load

3-115. Dead-load computations on a truss bridge can be rather lengthy, because it has many differently sized members. If possible, determine the actual dead load of the bridge by its individual components. Do this by—

- Analyzing each panel.
- Adding all of the weights of the components for the total dead-load weight.
- Dividing the total dead-load weight by the length of each panel.

3-116. If the above method cannot be used, use one of the following equations and *Figure 3-32, page 3-50,* to compute the total dead load of the bridge:

- **Pony-truss bridges.**

$$W_{DL} = \frac{b_r(A_t + 2.5d' + N_s + x_d t_d)}{1{,}000} \qquad (3\text{-}44)$$

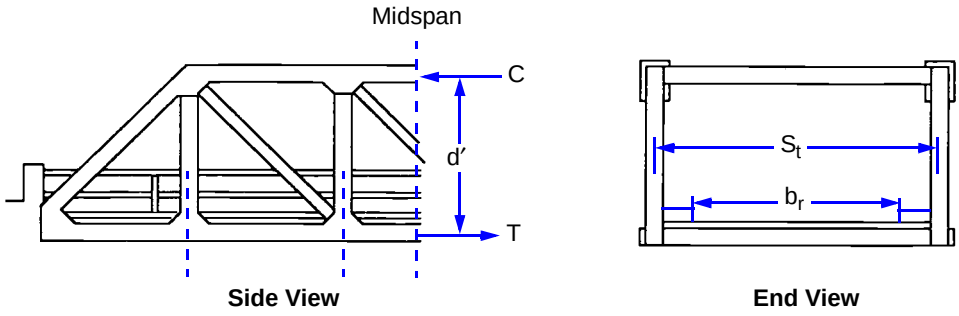

LEGEND:

C = compression force, in kips
S_t = center-to-center spacing between trusses
d′ = vertical distance between the centroids of the top and the bottom chords
b_r = curb-to-curb width
T = tensile force, in kips

Figure 3-32. Truss Dimensions

where—

W_{DL} = *total dead load of the bridge, in kpf*
b_r = *curb-to-curb roadway width, in feet*
A_t = *total cross-sectional area of the tension chord (bottom chord) of one truss, in square inches*
d' = *distance between the tension and compression truss chords at midspan, in feet*
N_s = *number of floor stringers per bay*
x_d = *deck-material factor (Table 3-8)*
t_d = *average deck thickness, in inches*

- **Through- or deck-truss bridges.**

$$W_{DL} = \frac{190b_r + 25A_t + 260t_d + 120N_s - 2{,}400}{1{,}000} \quad (3\text{-}45)$$

where—

W_{DL} = *total dead load of the bridge, in kpf*
b_r = *curb-to-curb roadway width, in feet*
A_t = *total cross-sectional area of the tension chord (bottom chord) of one truss, in square inches*
t_d = *average deck thickness, in inches*
N_s = *number of floor stringers per bay*

Table 3-8. Material Factor

Deck	Deck-Material Factor (x_d)
Timber	5
Concrete	14
Steel grating	6
Concrete-filled steel grating	15

Dead Load per Truss

3-117. Compute the dead-load weight per truss as follows:

$$w_{DL} = \frac{W_{DL}}{N_t} \quad (3\text{-}46)$$

where—

w_{DL} = *dead-load weight per truss, in kpf*
W_{DL} = *total dead-load weight, in kpf (compute or use equation 3-44 or 3-45)*
N_t = *number of trusses*

Dead-Load Moment per Truss

3-118. Compute the dead-load moment per truss as follows:

$$m_{DL} = \frac{w_{DL}L^2}{8} \quad (3\text{-}47)$$

where—

m_{DL} = *dead-load moment per truss, in kip-feet*
w_{DL} = *dead-load weight per truss, in kpf (equation 3-46)*
L = *span length, in feet (see paragraph 3-40 for continuous spans)*

Tensile Force in Bottom Chord

3-119. Compute the maximum allowable tensile force in the bottom chord as follows:

$$T = F_t A_n \quad (3\text{-}48)$$

where—

T = *maximum allowable tensile force in the bottom chord, in kips*
F_t = *allowable tensile stress for the bottom chord, in ksi (paragraph 3-63)*
A_n = *net area of the bottom truss chord (rivet and bolt holes deducted), in square inches*

Compressive Force in Top Chord

3-120. Check the two different buckling coefficients as follows:

$$KL_x/r_x \quad (3\text{-}49)$$

and—

$$KL_y/r_y \quad (3\text{-}50)$$

where—

K = *0.75 for the chord members with riveted end connections, or 0.88 for those with pinned ends*

L_x = *unbraced length in the vertical direction, in inches (Figure 3-25, page 3-46)*

r_x = *radius of gyration (paragraph D-15)*

L_y = *unbraced length in the horizontal direction, in inches (Figure 3-25)*

r_y = *radius of gyration (paragraph D-15)*

3-121. *Table 3-9* gives the allowable compressive strength in truss members (in pounds per square inch [psi]). Divide the answer by 1,000 to get the ksi for use in *equation 3-51*. Use the larger KL/r coefficient from *equation 3-49* or *3-50* and compare it to the appropriate buckling coefficient (denoted by C_c) in *Table 3-9*. Note that the value of C_c depends on the steel type and the yield stress. Use the appropriate equation from *Table 3-9* to compute the allowable compressive stress (denoted by F_c).

Table 3-9. Allowable Compressive Stress in Truss Members

	Unknown Steels				Known Steels				
	Before 1905	**1905 to 1936**	**1937 to 1963**	**After 1963**	**Carbon Steel**	**Silicon Steel >2″ to ≤4″**	**Nickel Steel**	**≤1-1/8″**	**>1-1/8″ to ≤2″**
C_c	148.4	138.1	131.7	126.1	131.7	112.8	102.0	107.0	110.4
	F_c = (in psi)								
$\frac{KL}{r} \le C_c$	$15{,}290 - 0.35\left(\frac{KL}{r}\right)^2$	$17{,}650 - 0.46\left(\frac{KL}{r}\right)^2$	$19{,}410 - 0.56\left(\frac{KL}{r}\right)^2$	$21{,}180 - 0.67\left(\frac{KL}{r}\right)^2$	$19{,}410 - 0.56\left(\frac{KL}{r}\right)^2$	$26{,}470 - 1.04\left(\frac{KL}{r}\right)^2$	$32{,}350 - 1.55\left(\frac{KL}{r}\right)^2$	$29{,}410 - 1.28\left(\frac{KL}{r}\right)^2$	$27{,}650 - 1.13\left(\frac{KL}{r}\right)^2$
$\frac{KL}{r} > C_c$	$\frac{168{,}363{,}840}{\left(\frac{KL}{r}\right)^2}$								

LEGEND:

$\frac{KL}{r}$ = least value from either *equation 3-49 or 3-50*

$$C = F_c A_g \quad (3\text{-}51)$$

where—

C = *allowable compressive force, in kips*
F_c = *allowable axial compressive stress, in ksi (Table 3-9)*
A_g = *gross cross-sectional area, in square inches (do not subtract the rivet or bolt holes)*

Moment Capacity per Truss

3-122. Compute the total moment capacity as follows:

$$m = F'd' \quad (3\text{-}52)$$

where—

m = *total moment capacity, in kip-feet*
F' = *the smaller of T or C from equation 3-48 or 3-51*
d' = *vertical distance from the centroid of the top and bottom chords, in feet (Figure 3-32, page 3-50)*

Live-Load Moment

3-123. Compute the live-load moment per truss as follows:

$$m_{LL} = \frac{m - m_{DL}}{1.15} \quad (3\text{-}53)$$

where—

m_{LL} = *live-load moment per truss, in kip-feet*
m = *total moment capacity, in kip-feet (equation 3-52)*
m_{DL} = *dead-load moment per truss, in kip-feet (equation 3-47)*

Effective Number of Trusses

3-124. Compute the maximum effective number of trusses for one-lane and two-lane traffic as follows:

- **One-lane traffic.**

$$N_1 = \frac{2S_t}{S_t + b_r - 10} \quad (3\text{-}54)$$

where–

N_1 = *maximum effective number of trusses for one-lane traffic*
S_t = *center-to-center truss spacing, in feet (Figure 3-32)*
b_r = *curb-to-curb roadway width, in feet (Figure 3-32)*

- **Two-lane traffic.** First compute—

$$C_v = b_r - 2S_e - 3.0 \geq 2.0 \text{ feet} \quad (3\text{-}55)$$

where—

C_v = *minimum spacing between vehicles in adjacent lanes, in feet*
b_r = *curb-to-curb roadway width, in feet (Figure 3-32, page 3-50)*
S_e = *7.0 feet or the actual axle width (center-to-center spacing of the tires or tracks for the desired vehicle)*

then compute—

$$N_2 = \frac{S_t}{S_t + b_r - 17 - C_v} \quad (3\text{-}56)$$

where—

N_2 = *maximum effective number of trusses for two-lane traffic*
S_t = *center-to-center truss spacing, in feet (Figure 3-32)*
b_r = *curb-to-curb roadway width, in feet (Figure 3-32)*
C_v = *minimum spacing between the vehicles in adjacent lanes, in feet*

- **Bridges with more than two lanes.** The value of the minimum spacing between vehicles in adjacent lanes will generally be too conservative. An engineer can determine the spacing based on the actual curb-to-curb width, expected travel lanes for the convoys, the presence of median strips, the convoy speed, and the degree of traffic control.

Total Live-Load Moment per Lane

3-125. Compute the total live-load moment per lane as follows:

$$M_{LL} = N_{1,2} m_{LL} \quad (3\text{-}57)$$

where—

M_{LL} = *total live-load moment per lane, in kip-feet*
$N_{1,2}$ = *effective number of trusses supporting the live load (equation 3-54 or 3-55)*
m_{LL} = *live-load moment per component, in kip-feet (equation 3-53)*

Truss Moment Classification

3-126. Determine the truss classification, based on bending moment, for both wheeled and tracked vehicles and for one- and two-lane traffic. Use *Table B-2, pages B-6* through *B-9,* or *Figures B-1* or *B-2, pages B-15* and *B-16*. For simply supported trusses, use the actual span length. For continuous or cantilever trusses, use the span length as discussed in *paragraph 3-111*.

Stringers and Floor Beams

3-127. Determine the classifications of the stringers and floor beams using the same procedure as that for girder bridges in *paragraphs 3-92* through *3-106*. Check the bending moment and the shear capacity.

Deck Classification

3-128. Decks distribute the live load to the stringers. They do not contribute to the moment capacity of the steel stringers unless composite construction is used. Reinforced concrete and steel-grid decks are used in civilian construction. Both decks are seldom critical in bridge classification. Classify timber decks as outlined in *paragraph 3-57*.

Width and Clearance Restrictions and Final Classification

3-129. Check width restrictions as discussed in *paragraph 3-44* and *Table 3-4, page 3-18*. Through-truss bridges have overhead bracing and require overhead clearance consideration. The final classification is the lowest of the girder, floor beam, stringer, deck (if checked), or two-lane-width classification.

REINFORCED CONCRETE SLAB BRIDGES

3-130. Concrete is very strong in compression and is a very efficient structural material. However, concrete is very weak in tension. Therefore, any concrete areas that may be subject to tensile stresses must be reinforced with steel reinforcing bars. Reinforced concrete slabs are often used for short-span bridges (*Figure 3-33*). Because of the highly varied dimensions and reinforcing details associated with reinforced concrete bridges, accurate analytical classification (as discussed later in this chapter) will be impossible without design or as-built details. If these are not available, use the other methods discussed in *Sections II* and *III* of this chapter.

Figure 3-33. Typical Reinforced Concrete Slab Bridge

ASSUMPTIONS

3-131. The analytical method (described later in this chapter) only applies to slab bridges with the main reinforcement running parallel to the direction of traffic. The slab acts as a one-way slab in the direction of traffic *(Figure 3-34A)*. Assume that the area above the neutral axis acts in compression and that the reinforcing steel in the bottom of the slab carries all of the tension and the concrete carries no tension. The assumed stress distribution is shown in *Figure 3-34B*. Only the moment capacity is determined for the slab since shear generally will not control in thin, reinforced-concrete members. Only a one-foot-wide strip of slab at the midspan should be considered. For continuous spans, convert the span length to an equivalent span length as outlined in *paragraph 3-41*.

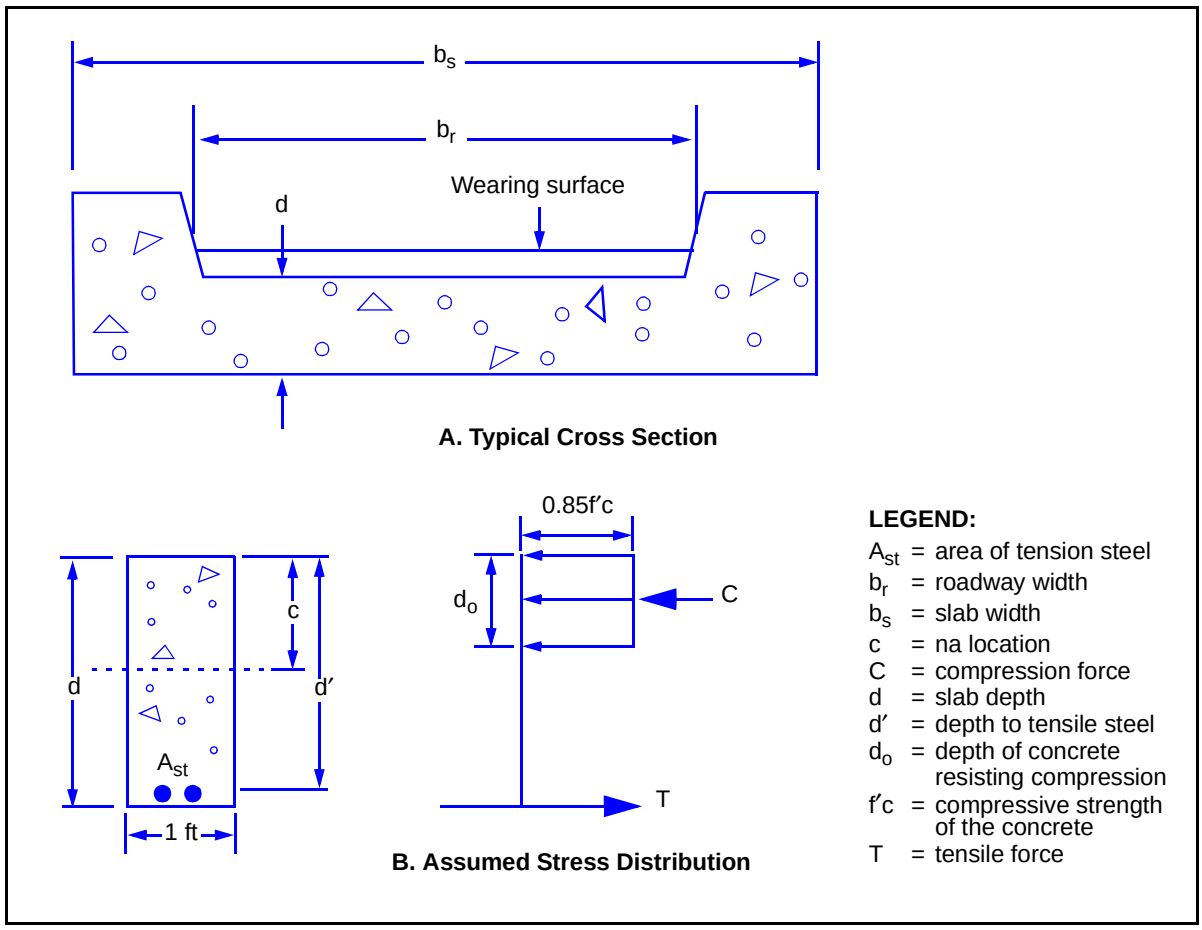

Figure 3-34. Details for a Reinforced Concrete Slab Bridge

CONCRETE STRENGTH

3-132. Try to obtain the ultimate strength of the in-place concrete from as-built drawings (listed on drawings as 28-day strength) or from concrete core tests. If this is not possible and the concrete is in satisfactory condition, refer to *Table 3-10*. If the year the bridge was built is unknown, use 2.5 ksi for the concrete strength.

Table 3-10. Concrete Strength Factors (When Unknown)

Year Built	Concrete Strength (f'_c) (ksi)
Before 1959	2.5
1959 and after	3.0

REINFORCING STEEL STRENGTH

3-133. Try to obtain the yield strength of the reinforcing steel from as-built drawings. If this is not possible, use *Table 3-11*. If *Table 3-11* does not show the needed yield strength, use 40 ksi for a bridge that appears relatively new and 33 ksi for a bridge that appears very old or deteriorated.

Table 3-11. Reinforcing Strength (When Unknown)

Grade of Reinforcing	Yield Stress (F_y) (ksi)
Structural or unknown grade before 1954	33
Grade 40 billet, intermediate, or unknown grade 1954 and beyond	40
Grade 50 rail or hard	50
Grade 60	60

REINFORCING STEEL RATIO

3-134. Compute the reinforcing steel ratio as follows:

$$A_{st} = \frac{12A_b}{S_b} \quad (3\text{-}58)$$

where—

A_{st} = *area of the tension steel in a 12-inch-wide section at midspan of the slab, in square inches*

A_b = *area of one reinforcing bar, in square inches*

S_b = *center-to-center spacing of the reinforcing bars, in inches*

then compute—

$$R_s = \frac{A_{st}}{12d'} \quad (3\text{-}59)$$

where—

R_s = *reinforcing steel ratio*

A_{st} = *area of the tension steel in a 12-inch-wide section at midspan of the slab, in square inches (equation 3-58)*

d' = *distance from the top of the beam to the center of the tension steel, in inches*

COMPRESSIVE-STRESS-BLOCK DEPTH

3-135. Compute the compressive-stress-block depth as follows:

$$d_o = \frac{A_{st}F_y}{10.2f'c} \quad (3\text{-}60)$$

where—

d_o = *compressive-stress-block depth, in inches (Figure 3-34B, page 3-56)*
A_{st} = *area of the tension steel, in square inches (equation 3-58)*
F_y = *yield strength of the reinforcing steel, in ksi (paragraph 3-133)*
$f'c$ = *concrete compressive strength, in ksi (paragraph 3-132)*

SLAB MOMENT CAPACITY

3-136. Compute the moment capacity per foot width of slab as follows:

$$m = 0.075A_{st}F_y\left(d' - \frac{d_o}{2}\right) \quad (3\text{-}61)$$

where—

m = *moment capacity per foot width of slab, in kip-feet*
A_{st} = *area of the tension steel, in square inches (equation 3-58)*
F_y = *yield strength of the reinforcing steel, in ksi (paragraph 3-133)*
d' = *distance from the top of the beam to the center of the tension steel, in inches (Figure 3-34B)*
d_o = *compressive-stress-block depth, in inches (equation 3-60)*

DEAD-LOAD MOMENT

3-137. Assume that the total dead load of the bridge, including the roadway and the curbs, is distributed over the full width of the slab. As shown in *Figure 3-34A*, the slab width may or may not equal the roadway width. Compute the dead-load moment as follows:

$$m_{DL} = \frac{W_{DL}L^2}{8b_s} \quad (3\text{-}62)$$

where—

m_{DL} = *total dead-load moment per foot width of slab, in kip-feet*
W_{DL} = *total dead load per foot length of the bridge, in kpf (paragraph 3-29)*
L = *span length, in feet*
b_s = *slab width, in feet*

ALLOWABLE LIVE-LOAD MOMENT

3-138. For normal operating conditions, compute the allowable live-load moment per foot width of slab as follows:

$$m_{LL} = \frac{m - 1.3m_{DL}}{1.5} \quad (3\text{-}63)$$

For emergency conditions where a higher allowable loading is required, compute the live-load moment as follows:

$$m_{LL} = \frac{m - 1.3m_{DL}}{1.15} \quad (3\text{-}64)$$

where—

m_{LL} = *allowable live-load moment per foot width of slab, in kip-feet*
m = *moment capacity per foot width of slab, in kip-feet (equation 3-61)*
m_{DL} = *dead-load moment on a 1-foot width of slab, in kip-feet (equation 3-62)*

EFFECTIVE SLAB WIDTH

3-139. Compute the effective slab width as follows:

$$b_e = 8 + 0.12L \leq 14 \text{ feet} \quad (3\text{-}65)$$

where—

b_e = *effective slab width, in feet (it must be less than 14 feet)*
L = *slab length, in feet (do not adjust for continuous spans)*

TOTAL LIVE-LOAD MOMENT

3-140. Compute the total live-load moment for the entire slab as follows:

$$M_{LL} = b_e m_{LL} \quad (3\text{-}66)$$

where—

M_{LL} = *total live-load moment for the entire slab, in kip-feet*
b_e = *effective slab width, in feet (equation 3-65)*
m_{LL} = *allowable live-load moment per foot width of slab, in kip-feet (equation 3-63 or 3-64)*

MOMENT CLASSIFICATION

3-141. Use the total live-load moment from *equation 3-66* and the span length (adjusted for continuous span if necessary) with the moment values from *Table B-2, pages B-6* through *B-9,* or *Figures B-1* or *B-2, pages B-15* and *B-16,* to determine the moment classification. The total live-load moment is the same for both one- and two-way traffic with this type of bridge. Therefore, two-way traffic will only be limited by the lane-width restrictions shown in *Table 3-3, page 3-14*.

REINFORCED CONCRETE T-BEAM BRIDGES

3-142. *Figure 3-35, page 3-60,* shows a typical reinforced concrete T-beam bridge. T-beams are used to obtain longer span lengths than those allowed by slab bridges *(paragraph 3-130).* The deck of the bridge acts integrally with and forms the top portion of the T-beam. The vertical leg of the T-beam (the stem) serves to position the reinforcing steel at a greater distance from the neutral axis. Because of the highly varied dimensions and reinforcing details

associated with reinforced concrete bridges, accurate analytical classification (discussed below) will be impossible without design or as-built details. If these are not available, use the other methods discussed in *Sections II* and *III* of this chapter.

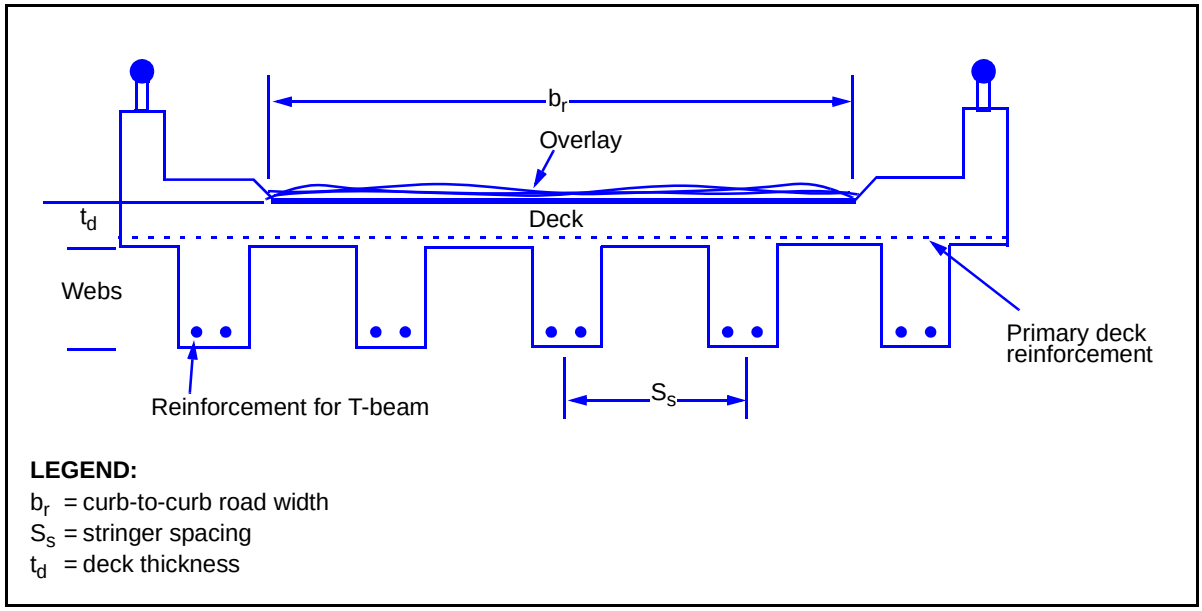

Figure 3-35. Reinforced Concrete T-Beam Bridge

ASSUMPTIONS

3-143. *Figure 3-36* shows the assumed stress distribution of the T-beam. An analysis should be based on a typical interior T-beam. The exterior beams are assumed to have equal or greater capacity than the interior beams. As with the slab bridge, the T-beam bridge is analyzed only on the basis of moment capacity, which means shear will generally not control the rating. The deck is also assumed to have sufficient thickness that it will not control the rating and is thus not rated.

CONCRETE AND REINFORCING STEEL STRENGTHS

3-144. For concrete and reinforcing steel strengths, refer to *paragraphs 3-132* and *3-133*.

EFFECTIVE FLANGE WIDTH

3-145. The deck width that carries the compressive stresses for an individual T-beam is the effective flange width and is the lesser of the following:

- One-fourth the span length, in inches (do not modify the span length for continuous spans).
- Twelve times the concrete-slab thickness plus the stem width, in inches.
- Center-to-center T-beam spacing, in inches.

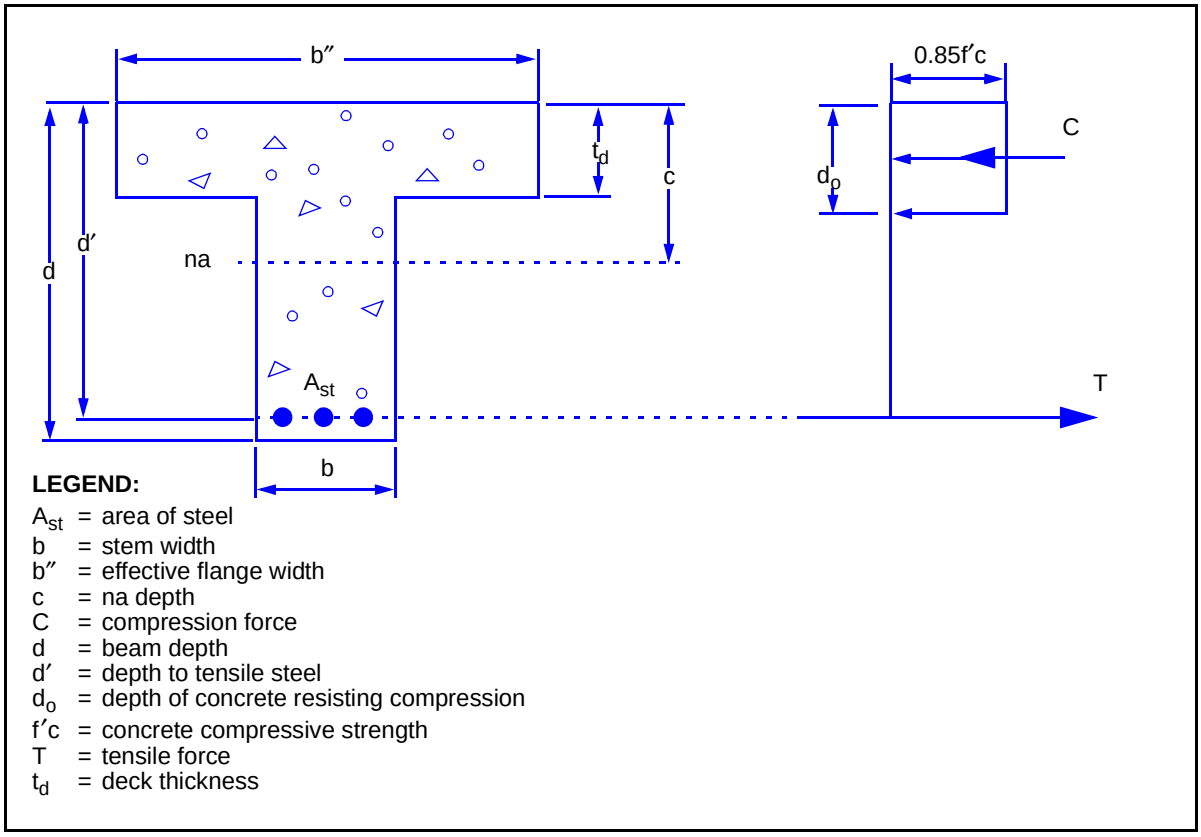

Figure 3-36. Assumed Stress Distribution in a T-Beam

TENSILE FORCE IN REINFORCING STEEL

3-146. Compute the tensile force in the reinforcing steel. First compute—

$$A_{st} = A_b N_B \qquad (3\text{-}67)$$

where—

A_{st} = *total area of the reinforcing steel, in square inches*
A_b = *cross-sectional area of one reinforcing bar, in square inches*
N_B = *total number of main reinforcing bars in the bottom of the T-beam*

then compute—

$$T = A_{st} F_y \qquad (3\text{-}68)$$

where—

T = *allowable tensile force in the reinforcing steel, in kips*
A_{st} = *total area of the reinforcing steel, in square inches (equation 3-67)*
F_y = *yield strength of the reinforcing steel, in ksi (paragraph 3-133)*

COMPRESSIVE-STRESS-BLOCK DEPTH

3-147. Compute the compressive-stress-block depth as follows:

$$d_o = \frac{A_{st}F_y}{0.85f'cb''} \quad (3\text{-}69)$$

where—

d_o = *compressive-stress-block depth, in inches (Figure 3-36, page 3-61)*
A_{st} = *area of the reinforcing steel, in square inches (equation 3-67)*
F_y = *yield strength of the reinforcing steel, in ksi (paragraph 3-133)*
$f'c$ = *concrete compressive strength, in ksi (paragraph 3-132)*
b'' = *effective flange width, in inches*

MOMENT CAPACITY OF T-BEAM

3-148. If the compressive-stress-block depth is less than or equal to the concrete-deck thickness, compute the moment capacity as follows:

$$m = 0.075A_{st}F_y\left(d' - \frac{d_o}{2}\right) \quad (3\text{-}70)$$

where—

m = *moment capacity of the T-beam, in kip-feet*
A_{st} = *area of the tension steel, in square inches (equation 3-67)*
F_y = *yield strength of the reinforcing steel, in ksi (paragraph 3-133)*
d' = *distance from the top of the deck to the center of the tension steel, in inches*
d_o = *compressive-stress-block depth, in inches (equation 3-69)*

3-149. If the compressive-stress-block depth is greater than or equal to the concrete-deck thickness, determine the moment capacity. First compute—

$$A_{sf} = \frac{0.85f'c(b'' - b)t_d}{F_y} \quad (3\text{-}71)$$

where—

A_{sf} = *area of reinforcement to develop the compressive strength of the overhanging flanges, in square inches*
$f'c$ = *concrete compressive strength, in ksi (paragraph 3-132)*
b'' = *effective flange width, in inches*
b = *beam width, in inches*
t_d = *deck thickness, in inches*
F_y = *yield strength of the reinforcing steel, in ksi (paragraph 3-133)*

then compute—

$$A_s = A_b N_B \quad (3\text{-}72)$$

where—

A_s = *total area of the reinforcing steel in the bottom half of the beam at the midspan, in square inches*

A_b = *cross-sectional area of one nonprestressed bar, in square inches*
N_B = *total number of nonprestressed bars in the bottom half of the beam*

and—

$$d_o = \frac{(A_s - A_{sf})F_y}{0.85f'cb} \quad (3\text{-}73)$$

where—

d_o = *new compressive-stress-block depth, in inches*
A_s = *total area of the prestressed steel in the bottom half of the beam at midspan, in square inches (equation 3-72)*
A_{sf} = *area of reinforcement to develop the compressive strength of the overhanging flanges, in square inches (equation 3-71)*
F_y = *yield strength of the reinforcing steel, in ksi (paragraph 3-133)*
$f'c$ = *concrete compressive strength, in ksi (paragraph 3-132)*
b = *beam width, in inches*

and finally, compute—

$$m = 0.075F_y\left[(A_{st} - A_{sf})\left(d' - \frac{d_o}{2}\right) + A_{sf}(d' - 0.5t_d)\right] \quad (3\text{-}74)$$

where—

m = *moment capacity of the T-beam, in kip-feet*
F_y = *yield strength of the reinforcing steel, in ksi (paragraph 3-133)*
A_{st} = *area of the tension steel, in square inches (equation 3-67)*
A_{sf} = *area of reinforcement to develop the compressive strength of the overhanging flanges, in square inches (equation 3-71)*
d' = *distance from the top of the deck to the center of the tension steel, in inches*
d_o = *new compressive-stress-block depth, in inches (equation 3-73)*
t_d = *deck thickness, in inches*

DEAD-LOAD MOMENT

3-150. Assume the total dead load is distributed equally to each T-beam. The dead-load moment per T-beam would be as follows:

$$m_{DL} = \frac{w_{DL}L^2}{8} \quad (3\text{-}75)$$

where—

m_{DL} = *dead-load moment carried by a single girder, in kip-feet*
w_{DL} = *dead load carried by a single girder, in kpf (equation 3-1)*
L = *span length, in feet (use an equivalent span length if the span is continuous)*

ALLOWABLE LIVE-LOAD MOMENT

3-151. For normal operating conditions, compute the allowable live-load moment on a single T-beam as follows:

$$m_{LL} = \frac{m - 1.3m_{DL}}{1.5} \quad (3\text{-}76)$$

For emergency conditions where a higher allowable loading is required, compute the live-load moment as follows:

$$m_{LL} = \frac{m - 1.3m_{DL}}{1.15} \quad (3\text{-}77)$$

where—

m_{LL} = *allowable live-load moment on a single T-beam, in kip-feet*
m = *moment capacity, in kip-feet (equation 3-70)*
m_{DL} = *dead-load moment, in kip-feet*

TOTAL ALLOWABLE LIVE-LOAD MOMENT

3-152. Multiply the allowable live-load moment by the effective number of T-beams for one- and two-lane traffic to obtain the allowable live-load moment as follows:

$$M_{LL} = N_{1,2}m_{LL} \quad (3\text{-}78)$$

where—

M_{LL} = *total live-load moment, in kip-feet*
$N_{1,2}$ = *effective number of girders (Table 3-3, page 3-14)*
m_{LL} = *allowable live-load moment on a single T-beam, in kip-feet (equation 3-76 or 3-77)*

MOMENT CLASSIFICATION

3-153. Use *Table B-2, pages B-6* through *B-9,* or the moment curves in *Figures B-1* or *B-2, pages B-15* and *B-16,* to determine the moment classification. Compare the values of the total live-load moment and the span length (or equivalent span length if the span is continuous).

WIDTH AND FINAL CLASSIFICATIONS

3-154. Check the width restrictions in *paragraph 3-44* and *Table 3-4, page 3-18*. The lowest of the moment or two-lane width classifications is the final bridge classification.

REINFORCED CONCRETE BOX-GIRDER BRIDGES

3-155. Reinforced concrete box-girder bridges *(Figure 3-37)* are used to acquire even greater span lengths than T-beam bridges. The deck of a box-girder bridge acts integrally with and forms the top portion of the thin-webbed I-shaped girders.

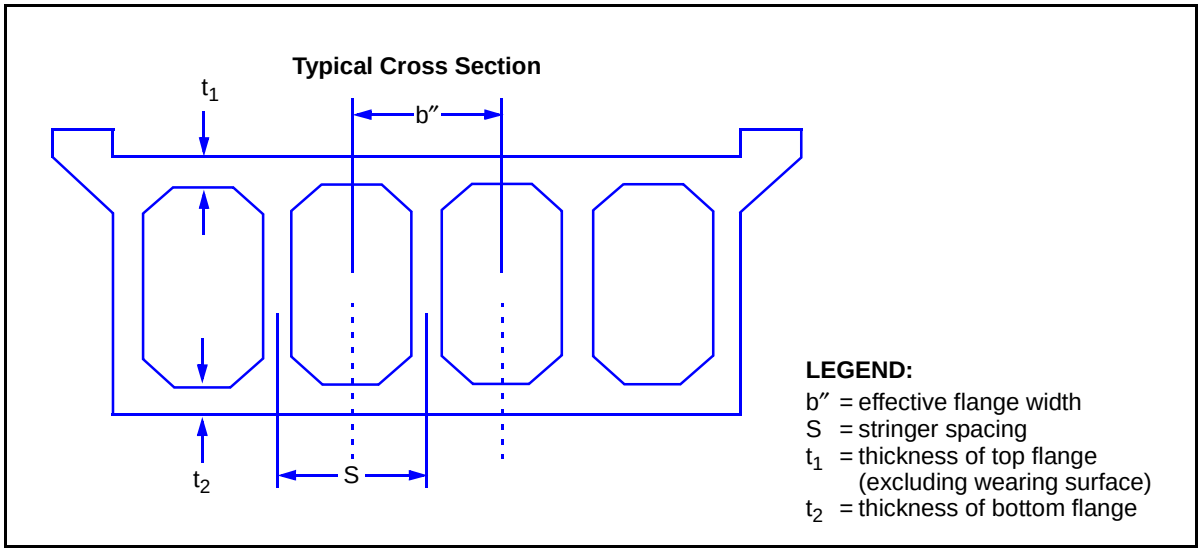

Figure 3-37. Typical Box-Girder Bridge

ASSUMPTIONS

3-156. The box-girder bridge is analyzed as a series of connected concrete I-beams, with flange widths equal to the spacing between the webs of the I-beams. As with T-beams, the exterior beams are assumed to have an equal or greater capacity than the interior beams. The box-girder bridge is analyzed only on the basis of moment capacity (shear will generally not control the rating). The deck is also assumed to have a sufficient thickness and a short enough span length so that it will not control the rating and is therefore not rated.

PROCEDURE

3-157. Use the same procedure as outlined for concrete T-beams in *paragraph 3-143* to determine the classification of concrete box girders. Use the following equation to compute the effective flange width:

$$b'' = \frac{b_f}{N_s} \qquad (3\text{-}79)$$

where—

b'' = *effective flange width, in inches*
b_f = *total flange width across the entire width of the box (Figure 3-37)*
N_s = *total number of webs within the box*

PRESTRESSED CONCRETE BRIDGES

3-158. Structural prestressing is placing a member in compression before it is loaded *(Figure 3-38, page 3-66)*. This action is an improvement to conventional reinforced concrete. Normal concrete is very weak in tension and is very prone to cracking. Water penetrates the concrete and the concrete deteriorates. Prestressing prevents cracking under normal loads by placing the member's entire cross section in compression.

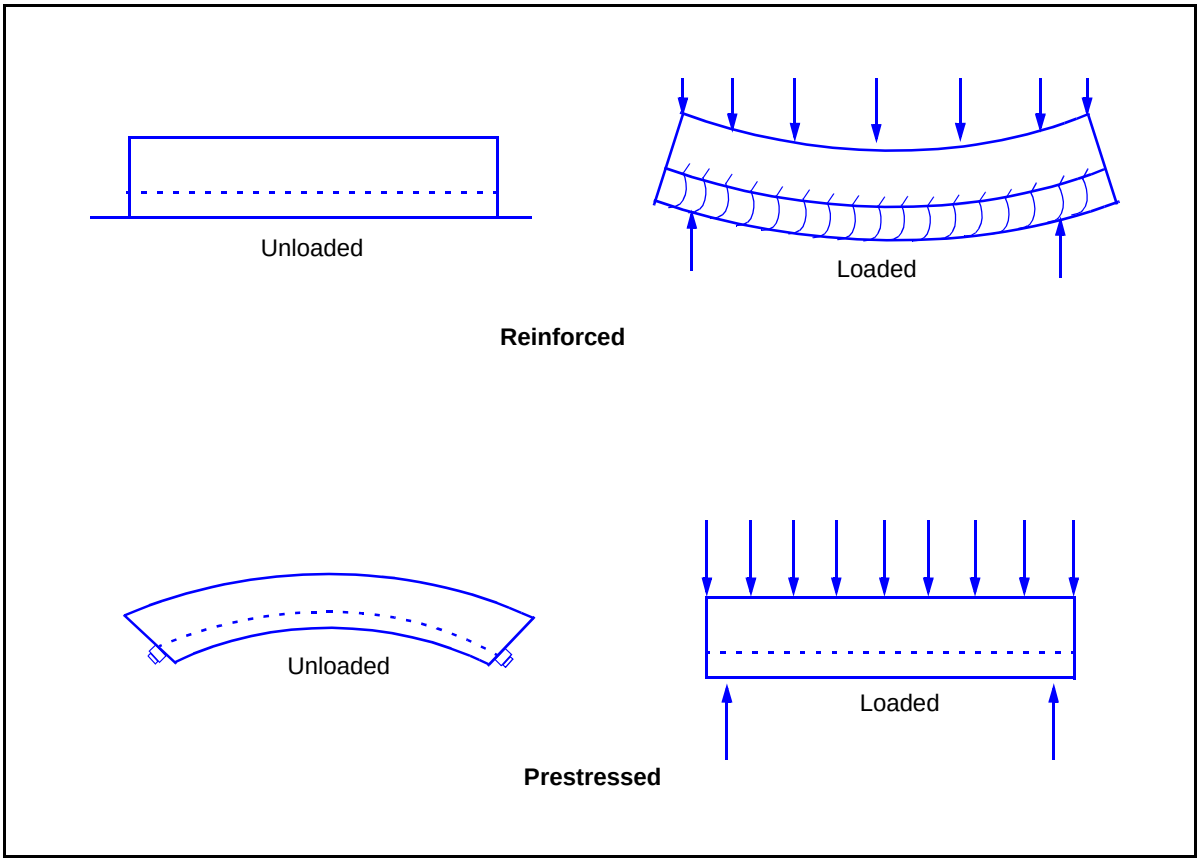

Figure 3-38. Conventional Reinforced Concrete Compared to Prestressed Concrete

RECOGNITION

3-159. There are many different forms of prestressed concrete beams, and they are sometimes difficult to distinguish from conventional reinforced beams. Compared to conventional beams, prestressed beams are usually precast and much more shapely than conventional poured-in-place beams. The most common form in the short- to medium-span ranges is the standard I-girder with a cast-in-place composite deck slab *(Figure 3-39)*. Precast, pretensioned solid or voided slabs are used for shorter spans. Many long-span box-girder and T-beam bridges are also prestressed. Some bridges may be of segmental posttensioned construction (another form of prestressing).

COMPOSITE CONSTRUCTION

3-160. Prestressed beams are generally made composite with a concrete deck. This allows the deck to form a large part of the top flange of the beam. The roughened concrete surface and steel-shear reinforcement provide resistance to horizontal-shear forces between the deck and the precast beams. While it is very difficult to distinguish (visually) between composite and noncomposite construction, most prestressed construction is composite. Therefore, the analytical procedure discussed in this chapter assumes composite construction.

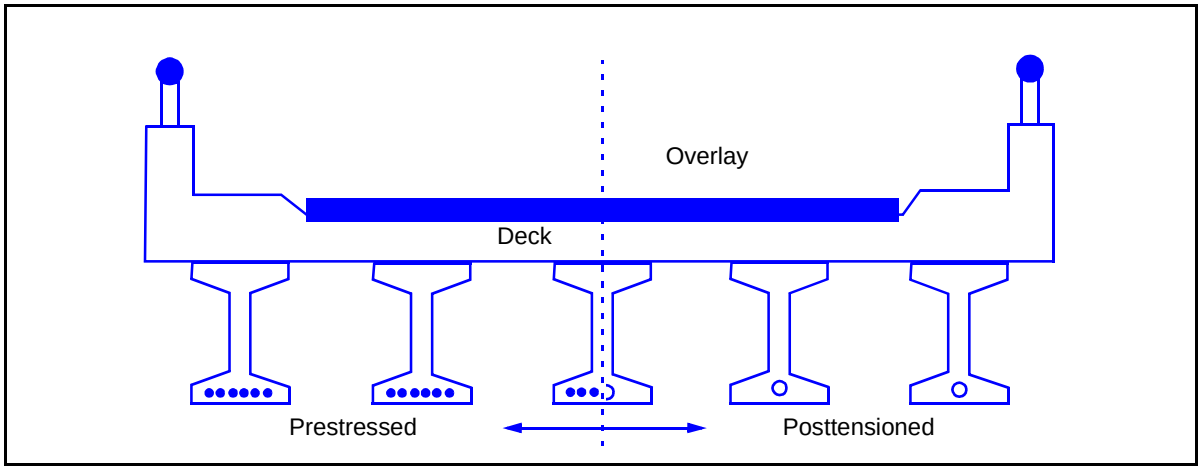

Figure 3-39. Prestressed Concrete Bridges

SUPPORTED AND UNSUPPORTED CONSTRUCTION

3-161. Precast, prestressed beams are placed on their supports with cranes during construction. The concrete-deck formwork is constructed on top of these beams and the concrete deck is poured. During the deck placement, the prestressed beams may or may not have beam shoring (supported or unsupported) along their length. If the beams are shored (supported) until the concrete of the deck cures, the resulting composite beam will be effective for the entire dead load of the beam and the slab, as well as live loads. If the beams are unshored (unsupported) during construction, the precast beam alone must support its own dead load and the composite beam will only be effective for the dead load of the deck and the live loads. Normally, the cost of shoring is not practical when compared with the small increase in material costs required for unsupported construction. Unless the method of construction is definitely known, assume unsupported construction. Therefore, the analytical procedure discussed in this chapter assumes unsupported construction.

LOAD-CLASSIFICATION METHODS

3-162. The analytical load-classification method gives the most accurate load classification. However, its use depends on complete details of the internal prestressing, which are generally not available without the original design drawings. If they are not available, use the other methods discussed in *Sections II* and *III* of this chapter.

ANALYTICAL CLASSIFICATION

3-163. If the interior and exterior beams are different, base the analysis on a typical interior beam. The exterior beams are assumed to have equal or greater capacity than the interior beams. Prestressed beams are analyzed on the basis of ultimate moment capacity, since shear will generally not control the classification. Also, the deck is assumed to have sufficient thickness that it will not control the classification and is thus not considered. The assumed stress distribution for prestressed beams is shown in *Figure 3-40, page 3-68*.

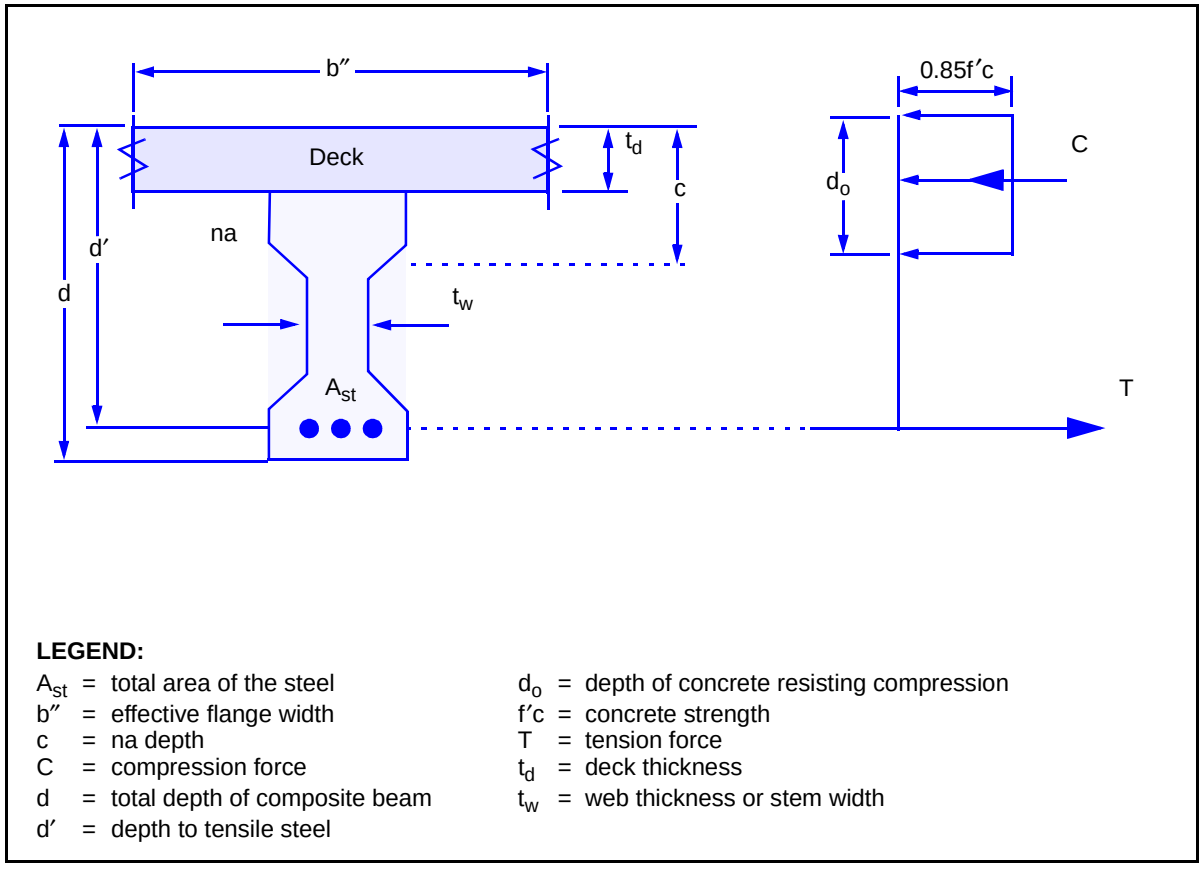

LEGEND:

A_{st}	= total area of the steel	d_o	= depth of concrete resisting compression
b″	= effective flange width	f′c	= concrete strength
c	= na depth	T	= tension force
C	= compression force	t_d	= deck thickness
d	= total depth of composite beam	t_w	= web thickness or stem width
d′	= depth to tensile steel		

Figure 3-40. Assumed Stress Distribution in a Prestressed Beam

Concrete and Steel Strengths

3-164. Prestressed beams may have a combination of prestressed and conventional nonprestressed steels. Obtain conventional reinforcing steel strengths as described in *paragraph 3-133*. Strength properties of prestressing can be obtained from the design drawings or from *Table 3-12*. Concrete strengths can be obtained from the design drawings or, if they are not known, use 4,000 psi.

Table 3-12. Properties of Prestressing Strands and Bars

Material	Grade or Type	Diameter (in)	Ultimate Strength (f_{pu}) (ksi)	Yield Strength (f_{py}) (ksi)
Strand	250 ksi	0.250 to 0.600	250	*Stress relieved = 0.85f_{pu}*
	270 ksi	0.375 to 0.600	270	*Low relaxation = 0.90f_{pu}*
Bar	Type 1, plain	0.750 to 1.375	150	*0.85f_{pu}*
	Type 2, deformed	0.625 to 1.375	150	*0.80f_{pu}*

Effective Flange Width

3-165. For T-beams or precast beams that are composite with the slab, the width of the deck that helps carry the compressive stresses for a beam is the effective flange width *(Figure 3-40)*. The effective flange width is the lesser of the following:

- One-fourth of the span length, in inches (do not modify the span length for continuous spans).
- Twelve times the concrete-slab thickness plus the stem width, in inches.
- The center-to-center beam spacing, in inches.

Steel Reinforcement Ratios

3-166. Compute the steel reinforcement ratio *(Figure 3-40)*. First compute—

$$A_{ps} = A_p N_B \tag{3-80}$$

where—

A_{ps} = *total area of the prestressed steel in the bottom half of the beam at midspan, in square inches*
A_p = *cross-sectional area of one bar or tendon, in square inches*
N_B = *total number of prestressed bars or tendons in the bottom half of the beam*

then compute—

$$R_{ps} = \frac{A_{ps}}{b'' d_{ps}} \tag{3-81}$$

and—

$$R_s = \frac{A_s}{b'' d_s} \tag{3-82}$$

where—

R_{ps} = *prestressed steel ratio*
A_{ps} = *total area of the prestressed steel in the bottom half of the beam at midspan, in square inches*
b'' = *effective flange width, in inches*
d_{ps} = *distance from the top of the slab to the center of the prestressed steel, in inches (if there are multiple layers, use the middepth of the layers)*
R_s = *nonprestressed steel ratio*
A_s = *total area of the reinforcing steel in the bottom half of the beam at the midspan, in square inches (equation 3-72)*
d_s = *distance from the top of the slab to the center of the nonprestressed steel, in inches (if there are multiple layers, use the middepth of the layers)*

Reinforcement Index

3-167. Compute the reinforcement index as follows:

$$R_r = \frac{R_{ps} f_{pu}}{f'c} + \frac{R_s d_s f_{sy}}{d_{ps} f'c} \quad (3\text{-}83)$$

where—

R_r = *reinforcement index*
R_{ps} = *prestressed steel ratio (equation 3-81)*
f_{pu} = *ultimate strength of the prestressed steel, in ksi (from design drawings or Table 3-12, page 3-68)*
$f'c$ = *concrete compressive strength, in ksi (paragraph 3-164)*
R_s = *nonprestressed steel ratio (equation 3-82)*
d_s = *distance from the top of the slab to the center of the nonprestressed steel, in inches (if there are multiple layers, use the middepth of the layer)*
f_{sy} = *yield strength of the nonprestressed reinforcing steel, in ksi (paragraph 3-133)*
d_{ps} = *distance from the top of the slab to the center of the prestressed steel, in inches (if there are multiple layers, use the middepth of the layer)*

Average Stress in Prestressed Steel

3-168. Compute the average stress in prestressed steel at maximum load as follows:

$$f_{ps} = f_{pu}(1 - 0.5R_r) \quad (3\text{-}84)$$

where—

f_{ps} = *average stress in the prestressed steel at maximum load, in ksi*
f_{pu} = *ultimate strength of the prestressed steel, in ksi (from design drawings or Table 3-12)*
R_r = *reinforcement index (equation 3-83)*

Maximum Tensile Force

3-169. Compute the maximum tensile force developed by a beam as follows:

$$T = A_{ps} f_{ps} + A_s f_{sy} \quad (3\text{-}85)$$

where—

T = *maximum tensile force developed by the beam, in kips*
A_{ps} = *total area of the prestressed steel, in square inches (equation 3-80)*
f_{ps} = *average stress in the prestressed steel at maximum load, in ksi*
A_s = *total area of nonprestressed reinforcing steel, in square inches (equation 3-72)*
f_{sy} = *yield strength of nonprestressed reinforcing steel, in ksi (paragraph 3-133)*

Area of Concrete Resisting Compression

3-170. Compute the steel reinforcement *(Figure 3-40, page 3-68)* as follows:

$$A_c = \frac{T}{x_r f'c} \quad (3\text{-}86)$$

where—

A_c = *area of the concrete resisting compression, in square inches*
T = *maximum tensile force developed by the beam, in kips (equation 3-85)*
x_r = *reduction factor. If* $f'c < 4$ *ksi, use* $x_r = 0.85$. *If* $f'c \geq 4$ *ksi, use* $x_r = [0.85 - 0.05(f'c - 4)]$, *but not less than 0.65.*
$f'c$ = *concrete compressive strength, in ksi (paragraph 3-164)*

Area of the Concrete Flange

3-171. Compute the area of the concrete flange available to resist compression as follows:

$$A_f = t_f b'' \quad (3\text{-}87)$$

where—

A_f = *area of the concrete flange available to resist compression, in square inches*
t_f = *top-flange thickness, in inches. For T-beams and all beams composite with the deck, use* t_f = *the deck thickness. This equation is not required for rectangular beams that are not composite with the deck.*
b'' = *effective flange width, in inches*

Moment Capacity

3-172. Below are four equations used to compute the beam moment capacity. To choose the proper equation, compare the reinforcement index, the area of the concrete flange available to resist compression, and the area of the concrete resisting compression and then choose the equation for which all the comparisons are true.

- If $R_r \leq 0.3$ *and* $A_f > A_c$, then—

$$d_o = \frac{R_r d_{ps}}{x_r} \quad (3\text{-}88)$$

and—

$$m = 0.075T\left(d_{ps} - \frac{d_o}{2}\right) \quad (3\text{-}89)$$

where—

A_f = *area of the concrete flange available to resist compression, in square inches*
A_c = *area of the concrete resisting compression, in square inches*
R_r = *reinforcement index (equation 3-83)*
d_o = *depth of the equivalent rectangular stress block, in inches*

d_{ps} = *distance from the top of the slab to the center of the prestressed steel, in inches (if there are multiple layers, use the middepth of the layers)*

x_r = *reduction factor (equation 3-86)*

m = *moment capacity per beam, in kip-feet*

T = *maximum tensile force developed by the beam, in kips (equation 3-85)*

- If $R_r \leq 0.3$ *and* $A_f \leq A_c$, then—

$$d_o = \frac{A_c - A_f}{t_w} \quad (3\text{-}90)$$

and—

$$d_{cs} = \frac{A_f\left(\frac{t_f}{2}\right) + d_o t_w\left(t_f + \frac{d_o}{2}\right)}{A_c} \quad (3\text{-}91)$$

and—

$$m = 0.075T(d_{ps} - d_{cs}) \quad (3\text{-}92)$$

where—

R_r = *reinforcement index (equation 3-83)*

Af = *area of the concrete flange, in square inches (equation 3-87)*

A_c = *area of the concrete resisting compression, in square inches (equation 3-86)*

d_o = *depth of the equivalent rectangular stress block, in inches*

t_w = *minimum web thickness, in inches (Figure 3-40, page 3-68)*

d_{cs} = *distance from the top of the deck to the center of portion of the web in compression, in inches*

t_f = *top-flange thickness, in inches. For T-beams and all beams composite with the deck, use t_f = the deck thickness. For rectangular beams that are not composite with the deck, use $t_f = 0$.*

m = *moment capacity per beam, in kip-feet*

T = *maximum tensile force developed by the beam, in kips (equation 3-85)*

d_{ps} = *distance from the top of the slab to the center of the prestressed steel, in inches (if there are multiple layers, use the middepth of the layers)*

- If $R_r > 0.3$ *and* $A_f \geq A_c$, then—

$$m = 0.1875(f'cb''d_{ps}^{\,2}) \quad (3\text{-}93)$$

where—

R_r = *reinforcement index (equation 3-83)*

A_f = *area of concrete flange, in square inches (equation 3-87)*

A_c = *area of concrete resisting compression, in square inches (equation 3-86)*

m = *moment capacity per beam, in kip-feet*
$f'c$ = *concrete compressive strength, in ksi (paragraph 3-164)*
b'' = *effective flange width, in inches*
d_{ps} = *distance from the top of the slab to the center of the prestressed steel, in inches (if there are multiple layers, use the middepth of the layers)*

- If $R_r > 0.3$ *and* $A_f < A_c$, then—

$$m = 0.075[0.25f'ct_w d_{ps}^2 + 0.85f'ct_f(b'' - t_w)(d_{ps} - 0.5t_f)] \quad (3\text{-}94)$$

where—

R_r = *reinforcement index (equation 3-83)*
A_f = *area of the concrete flange, in square inches (equation 3-87)*
A_c = *area of the concrete resisting compression, in square inches (equation 3-86)*
m = *moment capacity per beam, in kip-feet*
$f'c$ = *concrete compressive strength, in ksi (paragraph 3-164)*
t_w = *minimum web thickness, in inches (Figure 3-40)*
d_{ps} = *distance from the top of the slab to the center of the prestressed steel, in inches (if there are multiple layers, use the middepth of the layers)*
t_f = *top-flange thickness, in inches. For T-beams and all beams composite with the deck, use t_f = the deck thickness. For rectangular beams that are not composite with the deck, use $t_f = 0$.*
b'' = *effective flange width, in inches*

Dead-Load Moment

3-173. Assume the total dead load is distributed equally to each prestressed beam. The dead-load moment per beam would be computed as follows:

$$m_{DL} = \frac{w_{DL}(L^2)}{8} \quad (3\text{-}95)$$

where—

m_{DL} = *dead-load moment carried by a single girder, in kip-feet*
w_{DL} = *dead load carried by a single girder, in kpf (equation 3-1)*
L = *span length, in feet (use an equivalent span length if the span is continuous)*

Allowable Live-Load Moment

3-174. Compute the allowable live-load moment as follows:

- For normal operating conditions, compute the allowable live-load moment on a single prestressed beam as follows:

$$m_{LL} = \frac{m - 1.3m_{DL}}{1.5} \quad (3\text{-}96)$$

- For emergency conditions where a higher allowable loading is required, compute the live-load moment as follows:

$$m_{LL} = \frac{m - 1.3m_{DL}}{1.15} \quad (3\text{-}97)$$

where—

m_{LL} = *allowable live-load moment on a single prestressed beam, in kip-feet*
m = *moment capacity, in kip-feet (equation 3-89, 3-92, 3-93, or 3-94)*
m_{DL} = *dead-load moment, in kip-feet (equation 3-95)*

Live-Load Moment per Lane

3-175. Compute the live-load moment per lane as follows:

$$M_{LL} = N_{1,2}m_{LL} \quad (3\text{-}98)$$

where—

M_{LL} = *total live-load moment, in kip-feet*
$N_{1,2}$ = *effective number of girders (Table 3-3, page 3-14)*
m_{LL} = *allowable live-load moment on a single T-beam, in kip-feet (equation 3-96 or 3-97)*

Moment Classification

3-176. Determine the moment classification using the values of M_{LL} and the span length (or an equivalent span length if the span is continuous). Refer to *Table B-2, pages B-6* through *B-9*, or *Figures B-1* or *B-2, pages B-15* and *B-16*.

WIDTH AND FINAL CLASSIFICATIONS

3-177. Check the width restrictions in *paragraph 3-44* and *Table 3-4, page 3-18*. The lowest of the moment or the two-lane width classification is the final bridge classification.

ARCH BRIDGES

3-178. An arch is one of the most efficient structural shapes and one of the oldest methods of building relatively long spans. Some masonry-arch bridges that were built by the Roman legions are still in use today. Modern arch bridges are constructed with reinforced concrete and steel. *Figure 3-41* shows general types of arch bridges. The masonry arch is a form of the deck arch. Except for the masonry arch, all arches have a floor system just like a truss or girder bridge. The floor beams are connected to the arch at support points. The support points usually have vertical, column-type members that carry the floor-beam loads to the main arch members.

MODERN-ARCH BRIDGE

3-179. The analytical classification procedure for masonry-arch bridges is presented below. A complete reconnaissance of other arch bridges can be very time-consuming, and an exact analysis of these bridges is very tedious and time-consuming. A reasonable classification can be achieved by only classifying the stringers and floor beams of the floor system (the same as for a

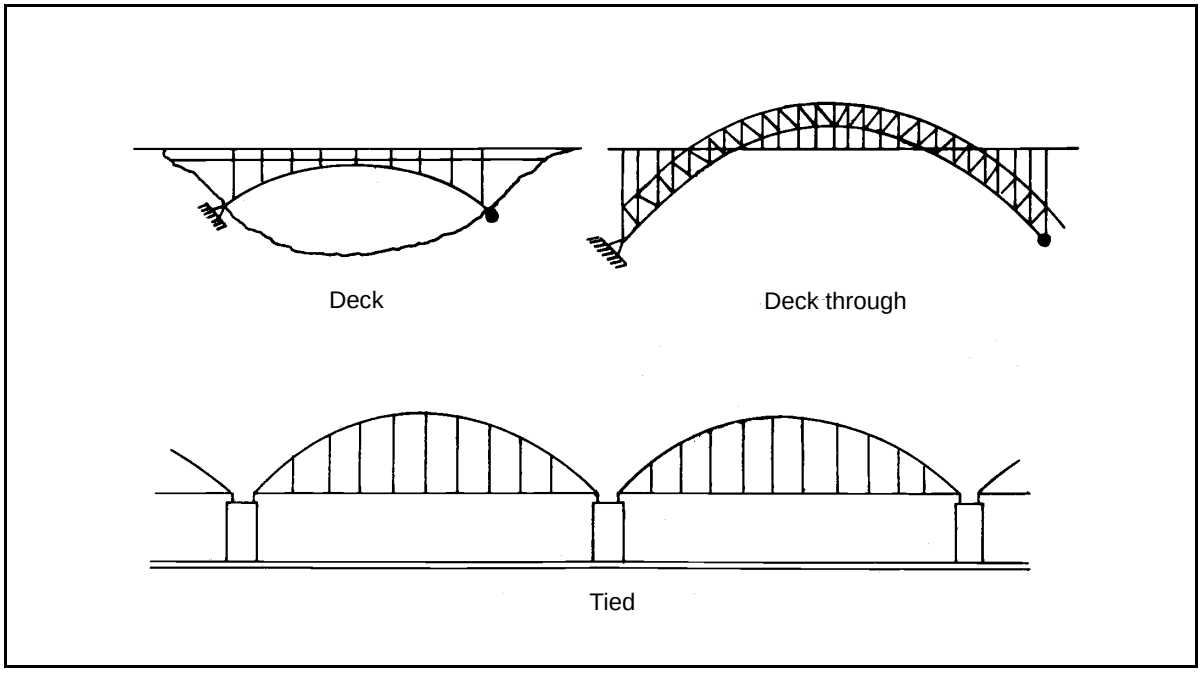

Figure 3-41. Types of Arch Bridges

girder bridge *[paragraphs 3-92* through *3-106]*). If an even more expedient classification is required, use the classification-by-correlation procedure discussed in *Section III* of this chapter (see *paragraph 3-13* for span-length requirements).

MASONRY-ARCH BRIDGE

3-180. A masonry-arch bridge is very difficult to analyze accurately. An empirical formula that is based solely on the bridge's dimensions is provided below.

PROVISIONAL LOAD CLASSIFICATION

3-181. Measure the critical dimensions (arch span length and total crown thickness) of the bridge *(Figure 3-42, page 3-76)*. Plot these dimensions on the nomograph in *Figure 3-43, page 3-77,* to determine the provisional load class (PLC). With a span length of 30 feet and a total crown thickness of 42 inches, use the nomograph as follows:

- Find the arch span length (denoted by L) in Column A.
- Find the total crown thickness ($t + d$) in Column B.
- Draw a straight line through the points in Columns A and B. The point at which the line intersects Column C is the PLC. For this example, the PLC is 96.

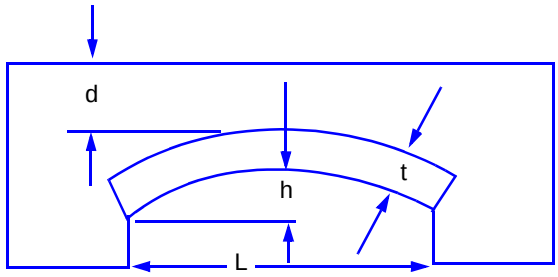

LEGEND:

d = depth of cover (not including arch ring)
h = thickness of the arch ring
L = arch span length measured from inside face to inside face of the supports
t = thickness of the arch ring

Figure 3-42. Critical Dimensions of a Masonry-Arch Bridge

MILITARY LOAD CLASSIFICATION

3-182. Obtain the one-lane, tracked MLC. Multiply the PLC by the appropriate bridge factors *(Tables 3-13* through *3-19* and *Figure 3-44, pages 3-78* through *3-80)* as follows:

$$MLC = PLC(A)(B)(C)(D)(E, F, or\ G) \quad (3\text{-}99)$$

where—

A through G = critical factors for masonry-arch bridges (Tables 3-13 through 3-19)

3-183. Apply the E, F, and G factors with discretion. For example, if an arch is deformed and cracked because of abutment faults, do not downgrade the bridge for all three factors. In such cases, apply the E, F, and G individually to the PLC, modified by A through D. Use the lowest of the three results as the one-lane MLC. If the bridge is wide enough for two lanes of traffic, multiply the one-lane MLC by 0.9 to get the two-lane MLC. Use *Figure 3-45, page 3-81*, to equate one- and two-lane, tracked classifications to respective wheeled classifications.

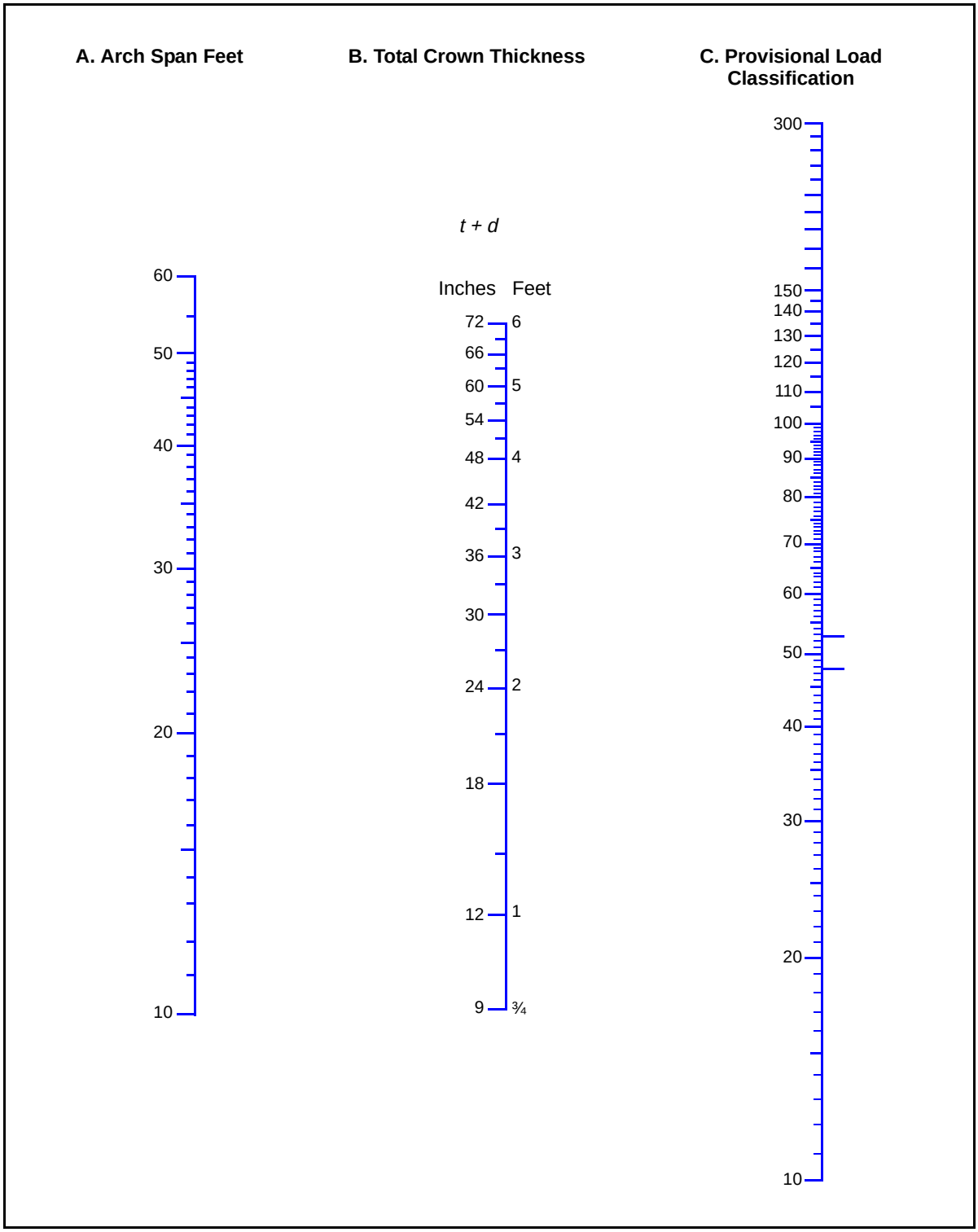

Figure 3-43. Provisional Load Carrier for a Masonry-Arch Bridge

Table 3-13. Profile Factors

Profile	Profile Factor (A)
For a span-to-rise ratio up to 4	1.0
For a span-to-rise ratio over 4	*Figure 3-44*

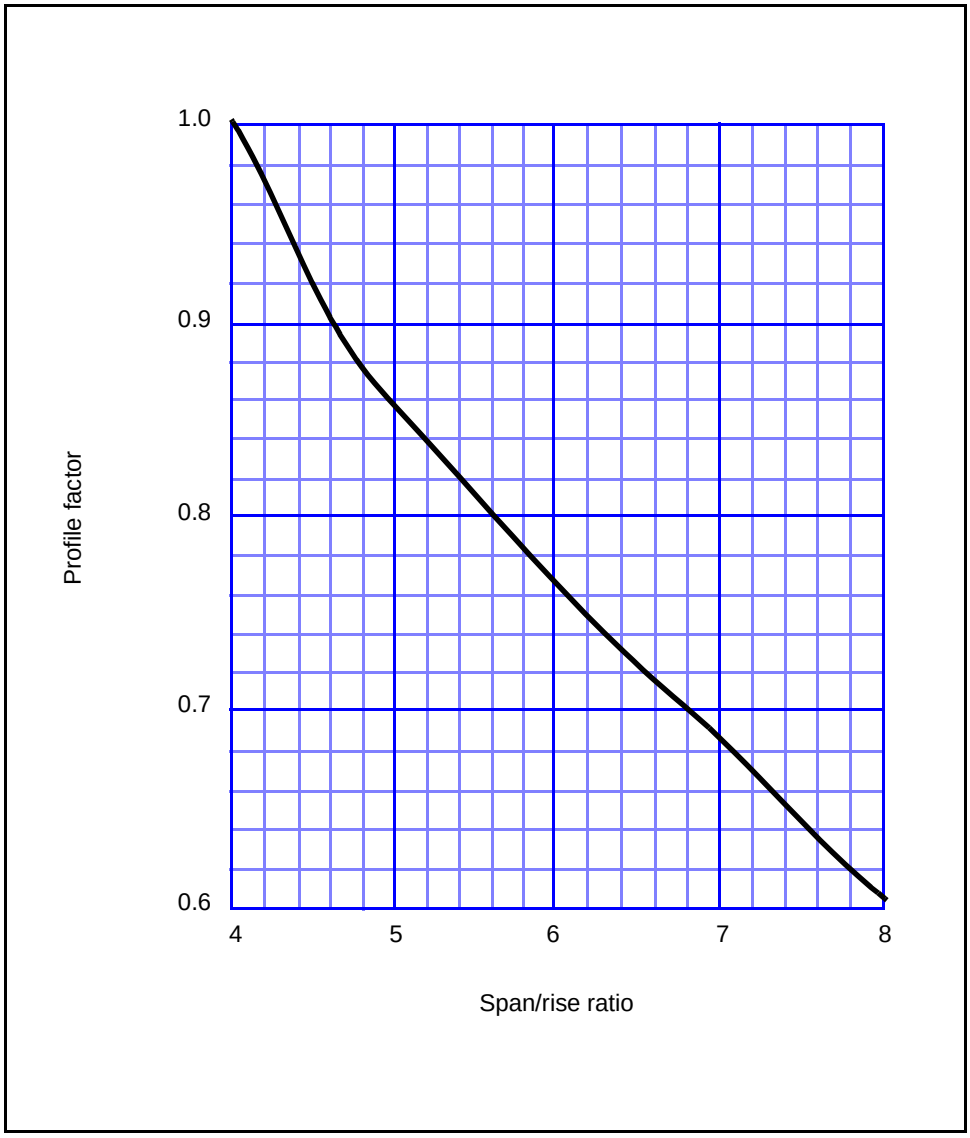

Figure 3-44. Profile Factors for Arch Bridges

Table 3-14. Material Factors

Material	Material Factor (B)
Granite, whinstone, and built-in course masonry	1.5
Concrete or blue engineering bricks	1.2
Good limestone masonry and building bricks	1.0
Poor masonry or brick (any kind)	0.7 – 0.5

Table 3-15. Joint Factors

Joint	Joint Factor (C)
Thin joints (1/10 inch or less)	1.25
Normal joints (width up to 1/4 inch, pointed mortar)	1.00
Normal joints (unpointed mortar)	0.90
Joint over 1/4 inch wide (irregular, good mortar)	0.80
Joint over 1/4 inch wide (mortar containing voids deeper than 1/10 of the ring thickness)	0.70
Joints 1/2 inch or more wide (poor mortar)	0.50

Table 3-16. Abutment Factors

Abutment	Abutment Factor (D)
Both abutments satisfactory	1.00
One abutment unsatisfactory	0.95
Both abutments unsatisfactory	0.90
Both abutments massive (clay fill suspected)	0.70
Arch supported on one abutment and one pier	0.90
Arch supported on two piers	0.80

Table 3-17. Deformation Factors

Consideration	Deformation Factor (F)
The rise over the affected portion is always positive	Span-rise ratio of affected portion applied to the whole arch
Flat section of profile exits	Maximum: Class 12
A portion of the ring is sagging	Maximum: Class 5 (if fill at crown exceeds 18 inches)

Table 3-18. Abutment Fault Factors

Fault	Abutment Fault Factor (G)
Inward movement of one abutment	0.75 to 0.50
Outward spread of abutments	1.00 to 0.50
Vertical settlement of one abutment	0.90 to 0.50

Table 3-19. Crack Factors

Crack Factor (E)	Comment
Longitudinal cracks within 2 feet of the edge of the arch. If wider than 1/4 inch and longer than 1/10 the span in bridges: Wider than 20 feet between parapets. 1.0 Narrower than 20 feet between parapets. 0.9 to 0.7	Outward force acts on the spandrel walls, caused by lateral spread of the fill
(1) Longitudinal cracks in the middle third of the bridge width: (a) One small crack under 1/8 inch wide and shorter than 1/10 the span. 1.0 (b) Three or more small cracks as above. 0.5 (c) One large crack wider than 1/4 inch and longer than 1/10 the span. 0.5 (2) Lateral and diagonal cracks less than 1/8 inch wide and shorter than 1/10 to the arch width. 1.0 (3) Lateral and diagonal cracks wider than 1/4 inch and longer than 1/10 the arch width: Restrict the load class to 12 or to the computed class using all other applicable factors, whichever is less.	Varying amounts of subsidence found along the length of the abutment. Large cracks are danger signs indicating that the arch ring has broken up into narrower, independent rings. Lateral cracks are usually found near the quarter points and result from permanent deformation of the arch, which may be caused by partial collapse of the arch or by abutment movement. Diagonal cracks, usually starting near the sides of the arch at the springing and spreading toward the center of the arch at the crown, are probably due to subsidence at the sides of the abutment. They indicate that the bridge is in a dangerous condition.
(1) Cracks between the arch ring and spandrel or parapet wall greater than 1/10 the span due to fill spread. 0.9 (2) Cracks between the arch ring and spandrel or parapet wall due to a dropped ring: Reclassify from the nomograph *(Figure 3-43, page 3-77)*, taking the crown thickness as that of the ring alone.	The fill spreads and pushes the wall outwards. The flexible ring is moved away from a stiff fill so that the two act independently. This type of failure often produces cracks in the spandrel wall near the quarter points.

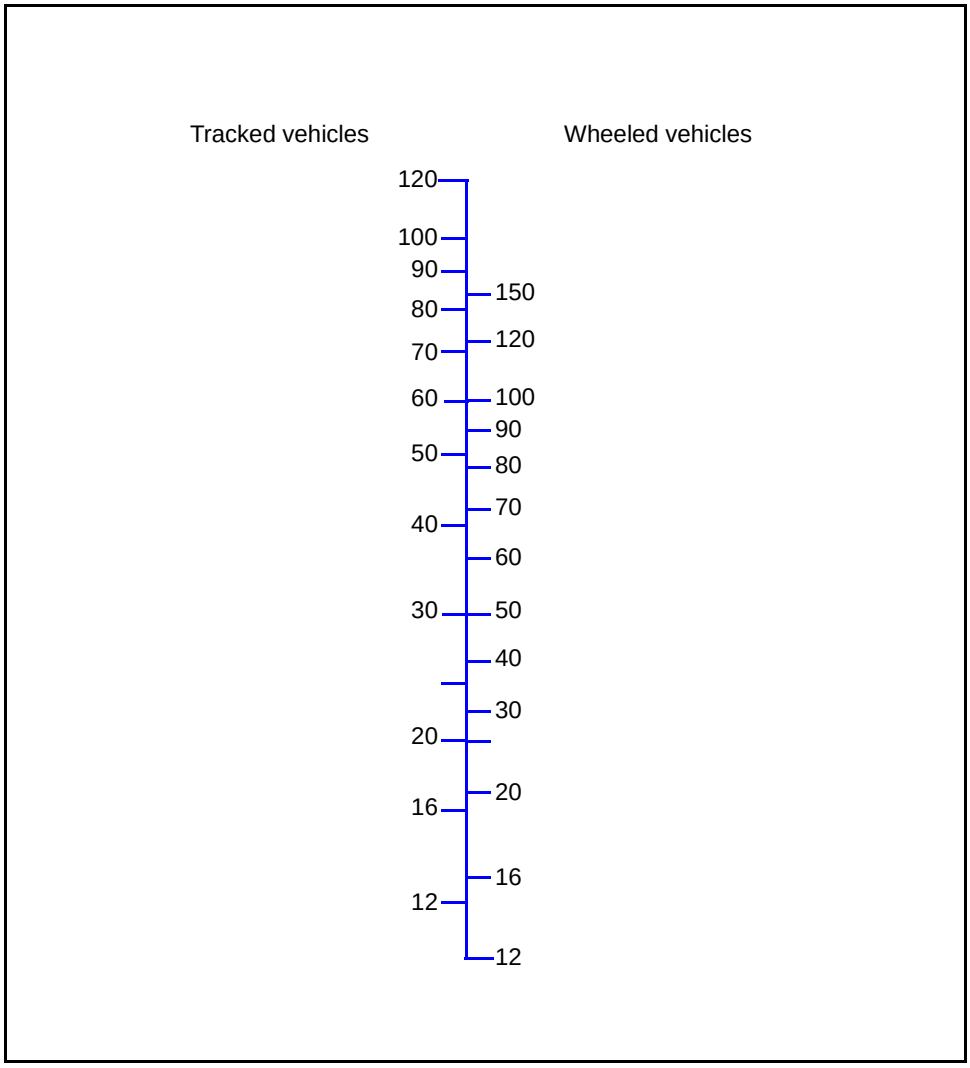

Figure 3-45. Bridge Classification Correlations

MOVABLE BRIDGES

3-184. When a highway crosses a navigable waterway with light boat traffic, movable bridges are often constructed as a cost-saving measure *(Figure 3-46, page 3-82)*. The three general types of movable bridges are swing, bascule, and vertical-lift. Construction is usually a truss or girder system with machinery to move the bridge away from the navigation channel. Determine the MLC the same as for fixed bridges of the same type (girder, truss, and so on). The machinery/gearing for moving the bridge should have no effect on the MLC. Special warning signs should be posted indicating the presence of a movable bridge.

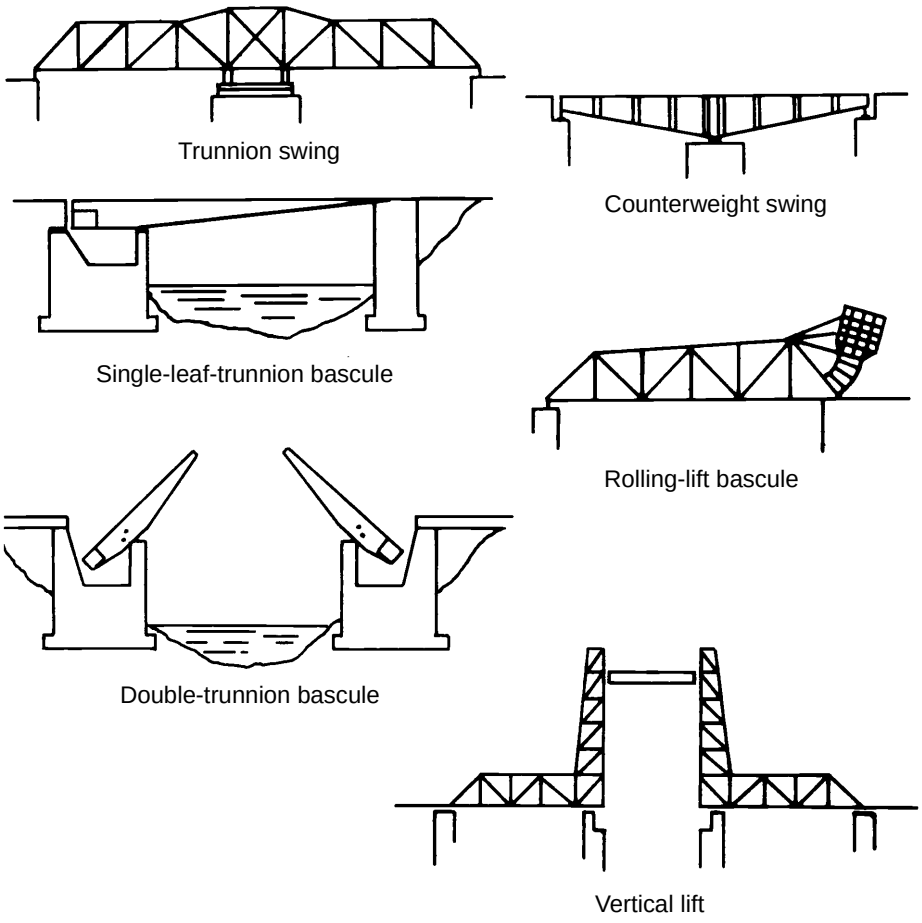

Figure 3-46. Typical Movable Bridges

SUSPENSION BRIDGES

3-185. A suspension bridge *(Figure 3-47)* is used mainly for long spans where support from below is impracticable (for example, when a water current is too swift or when the gap to be bridged is too deep). Most spans over 2,000 feet are of suspension construction. Like truss and girder bridges, all suspension bridges have a floor system consisting of stringers and floor beams. The floor beams are connected to the suspension cables at hanger points.

3-186. The load capacity of a suspension bridge may be based on many limiting elements, such as the support towers and the suspension cables, anchorages, and hangers. The reconnaissance and analysis effort for all of these elements would be very time consuming. A reasonable classification can

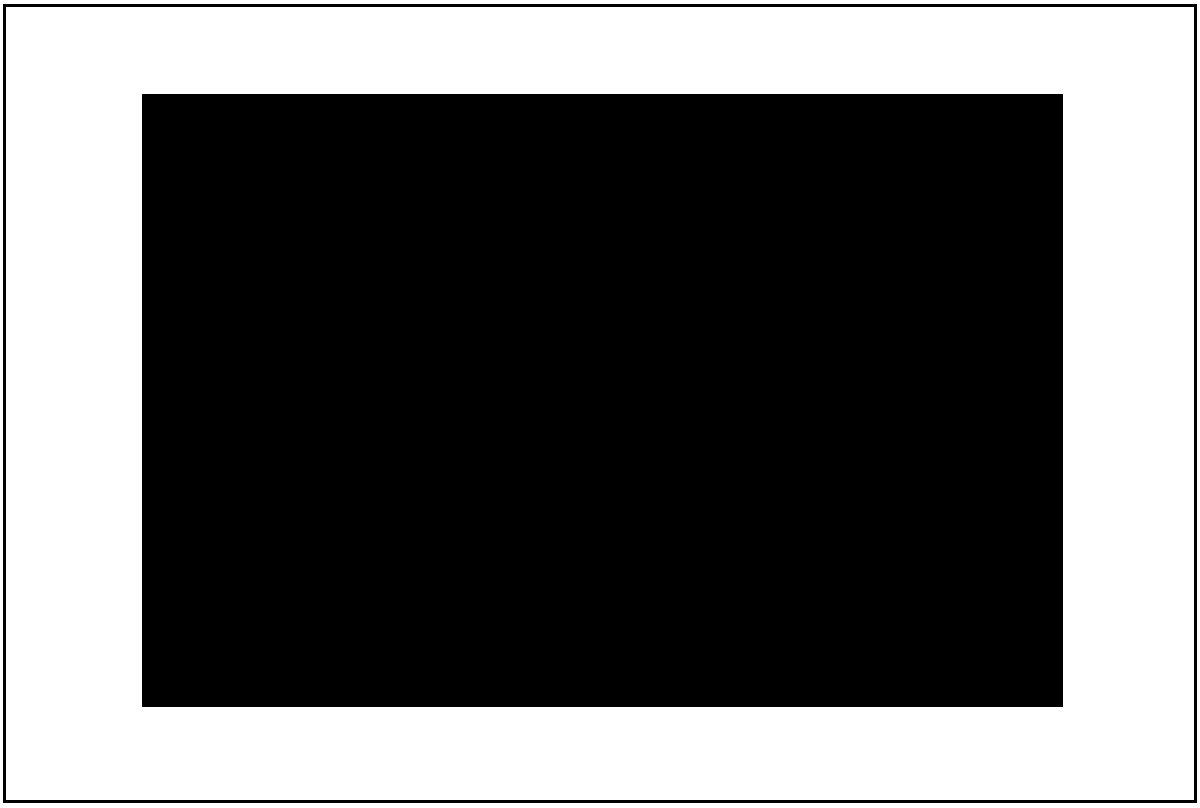

Figure 3-47. Typical Suspension Bridge

be achieved by only considering the floor system (such as the stringers and floor beams that are suspended between the hangers [the vertical cables hung from the suspension cables]). The floor system of a suspension bridge is the same as that of a steel-girder bridge. Use *paragraphs 3-92* through *3-106* to rate the stringers and floor beams. If a more expedient classification is required, use the classification by correlation procedure discussed in *Section III* of this chapter (pay careful attention to the span length requirements of *paragraph 3-13*).

OTHER BRIDGES

3-187. This section may not have covered all bridge types found in the TO (especially in foreign countries). Local civilian authorities are the best source for obtaining a reasonable MLC on these bridges; otherwise, an analysis of the superstructure will usually suffice.

Chapter 4

Reinforcement and Repair

Sometimes a bridge outlives its usefulness. Tactical loads may be greater than the capacity of the existing structure, or the bridge may have deteriorated or been damaged. A well-designed reinforcement will usually increase a bridge's period of usefulness. The purpose of bridge reinforcement is to increase a bridge's load-carrying capacity. This can be done by adding materials to strengthen the component parts or by reducing the span length.

BASIC CONSIDERATIONS

4-1. Reinforcing existing bridges can save time and materials. Using the bridges on established routes will allow LOC to be operable quickly. Use serviceable bridge components (such as abutments and piers) when available. The following factors may influence reinforcement plans:

- **Maintenance reduction.** Reinforcing a bridge will often eliminate the need for long detours and difficult bypasses with attendant maintenance and traffic problems. Smooth deck surfaces will ease traffic movement.
- **Weather conditions.** Heavy rains that increase the stream's flow and render bypasses and fords impassable may dictate the need for bridge reinforcement. Anticipate such conditions to affect timely reinforcement measures.
- **Tactical bridging assets.** Reinforcement of existing bridges may allow the release of tactical or LOC bridging assets. Although the M2 Bailey-bridge components are often used for expedient reinforcement, other types of bridging (including fixed and floating types) may be released.

CONSTRUCTIONS FACTORS

4-2. Many factors influence the final decisions about reinforcement construction. Construction methods depend on the site locations, the equipment available, and the nature of the repairs.

4-3. When selecting a construction site, consider the—

- Parts of the original structure that are still usable.
- Type of bridge and the span lengths.
- Characteristics of the waterway (particularly the use of additional bents or pile piers).
- Condition of the approaches to a reinforced bridge.
- Available alternate sites.

4-4. Standard steel and timber units that the military stocks are preferred over civilian materials. When there is an adequate supply of military

materials, the construction quality and speed is better and repairs are better accommodated. Sometimes only civilian resources will be available.

CONVERSIONS

4-5. A bridge may be converted from one type to another (for example, converting a railroad bridge to a highway bridge). Converting a highway bridge to a railroad bridge is seldom practical since railroad loadings are usually heavier than highway loadings. *FM 5-277* describes the use of panel-bridge components for railroad-bridge construction.

4-6. The bridge shown in *Figure 4-1* is a one-lane railroad, through-girder bridge. The same construction could be used for other types such as a deck-girder, a deck-truss, or a through-truss bridge. The same principles also apply to installing a two-lane highway deck on a double-track railroad bridge. Many railroad bridges have less than the required 18-foot roadway width for two-lane military highway traffic. A through-girder railroad bridge may be able to be converted to a two-lane military bridge *(Figure 4-2)*.

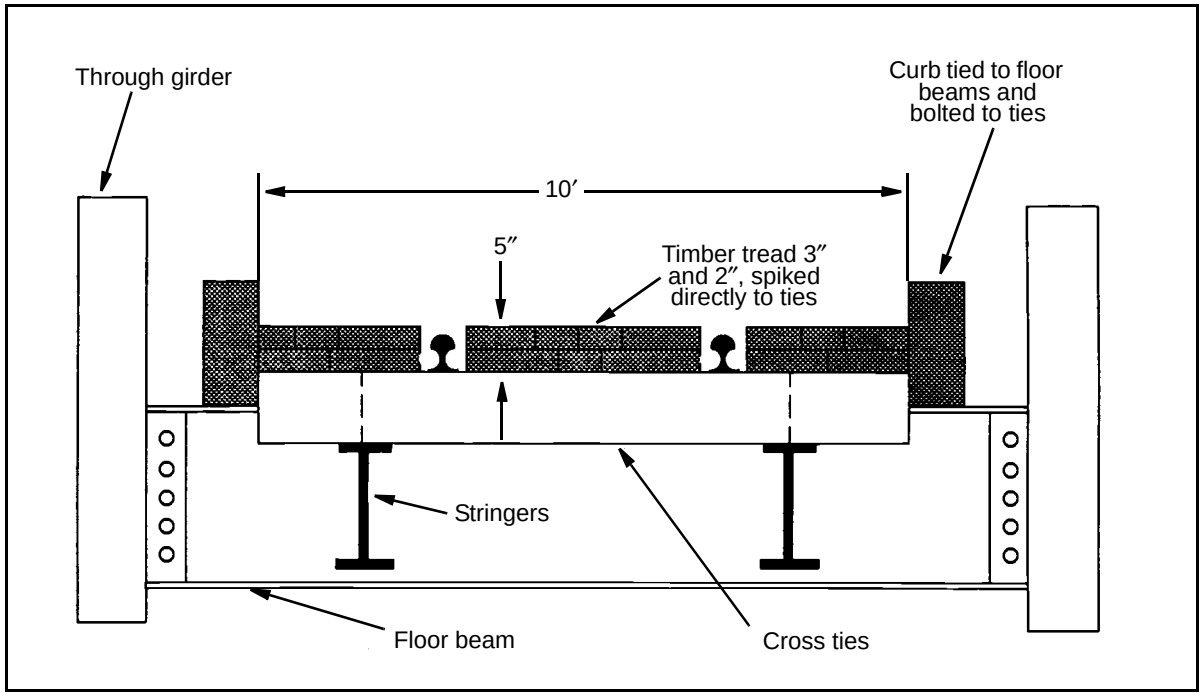

Figure 4-1. Conversion of a One-Lane Railroad, Through-Girder Bridge to a One-Lane Highway Bridge

CONTINUOUS SPANS

4-7. Civilian bridges are frequently designed with continuous spans. A continuous-span bridge spans one or more intermediate supports without a break in the main load-carrying members. The top portion of the stringer is in compression over the major part of the span and in tension over the intermediate supports. Conversely, the bottom portion is in tension over the major part of the span but is in compression over the support *(Figure 4-3)*.

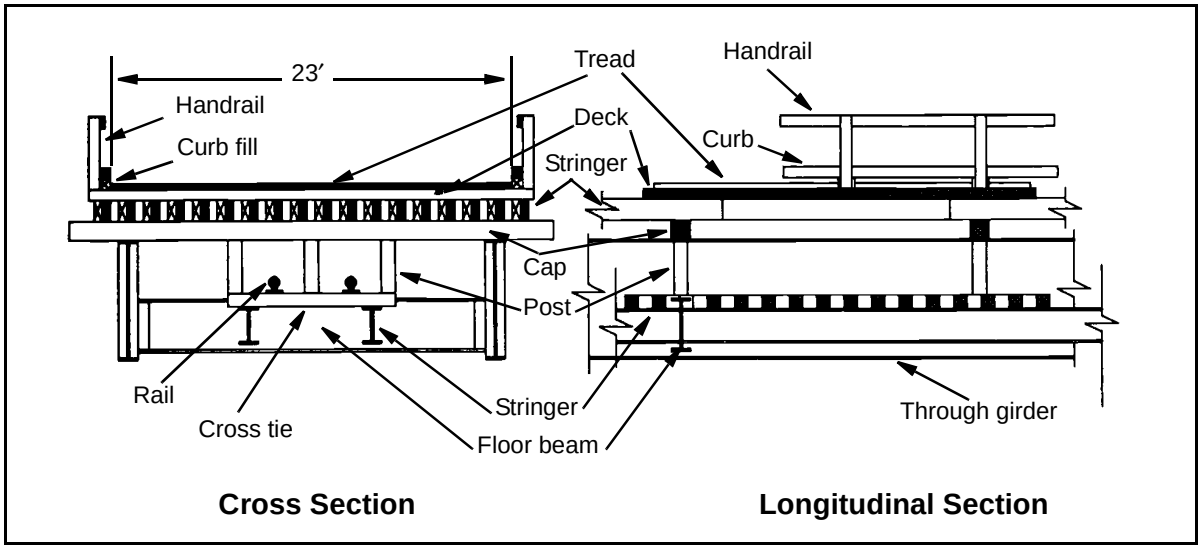

Figure 4-2. Conversion of a One-Lane Railroad Bridge to a Highway Bridge

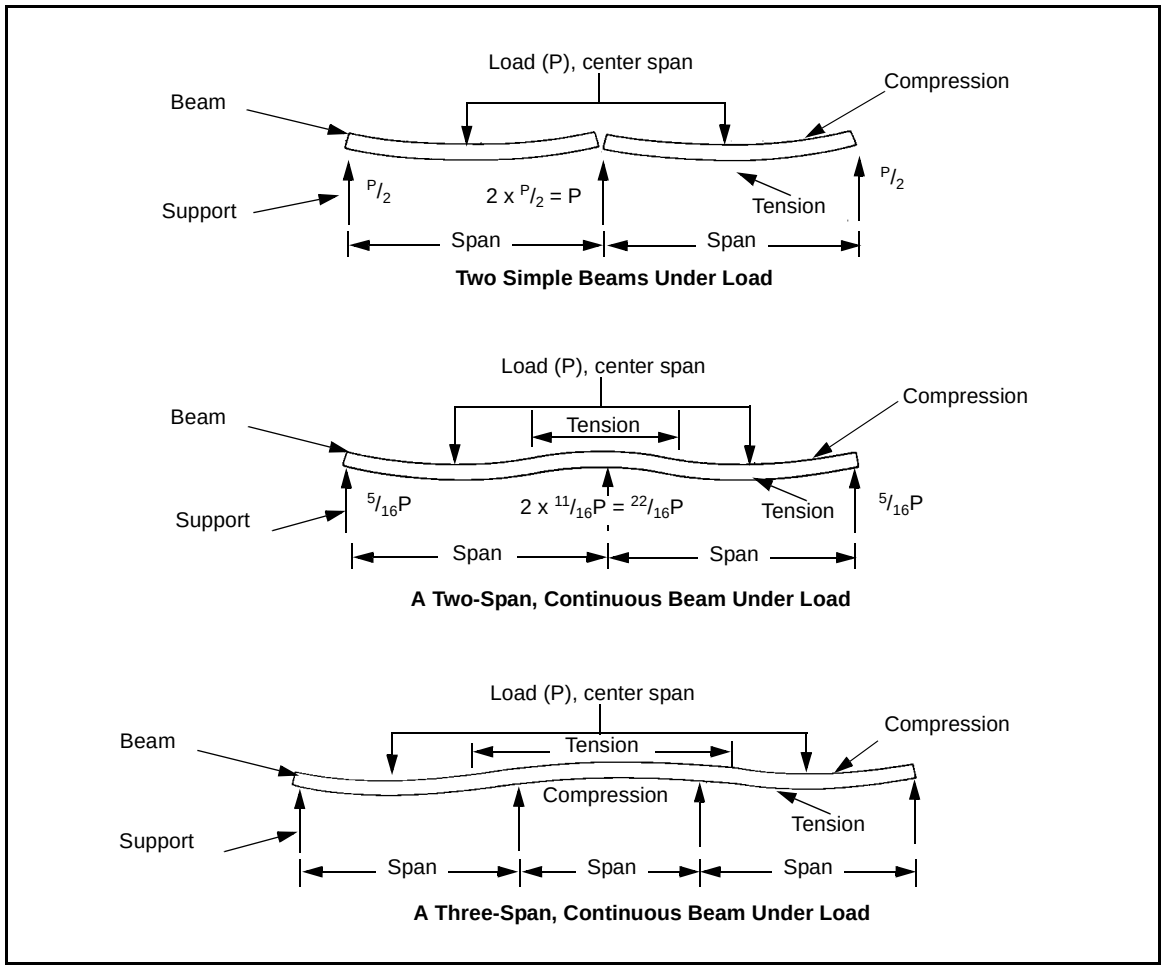

Figure 4-3. Stress Reversals in Continuous-Span Structures

4-8. When an ordinary, noncontinuous truss is propped up by bents or other supports are placed under the lower-chord panel points, the effect for which a truss was designed is reversed. Some truss members are designed to carry tension and others are designed to carry compression. By adding supports to a simply supported bridge, its condition may become continuous. This continuity may cause stresses to reverse so that the tension members become compression members resulting in failure. Furthermore, the magnitude of stress may increase. In general, compression members are heavy enough to carry tension but lighter members designed for tension ordinarily will not resist compression. Continuous trusses or trusses made continuous by new construction should be carefully analyzed by a qualified engineer to ensure that the propping of the tension members will not cause a stress reversal.

Advantages

4-9. A continuous design is somewhat more economical regarding materials for long spans because of the reduction of the midspan moment due to continuity. Also, deflections of the spans are greatly reduced due to continuity.

Disadvantages

4-10. Uneven settling of supports may occur when all the foundations do not rest on substantial soil. If a pier settles appreciably under load, the settling creates added stresses that may be detrimental to the superstructure.

HASTY OR EMERGENCY REPAIRS

4-11. Emergency repairs are usually governed by the need for an expedient crossing, with immediate need dictating the capacity and permanence of the structure. Where possible, use standard items to expedite repairs (including Bailey-bridge components). If tactical bridging or standard items are not available, expedient methods will often satisfy repair requirements, assuming that most emergency structures will later be reinforced, replaced, or repaired. Bridge structures, site characteristics, and subsequent repair methods vary.

4-12. An engineer commander will select the repair method. This decision is based on the—

- Type of bridge.
- Nature of damage.
- Tactical situation and bridge requirements.
- Site characteristics (including usable bypasses).
- Available troops and equipment.
- Standard-stock bridging materials, the available accessories, and the time needed to get them to the site.
- Available local civilian materials.
- Time needed to perform the bridge repair versus the time needed to establish a detour or prepare a bypass.
- Skill and ingenuity of the engineers and construction force.

REPAIRING GAPS IN BRIDGE DECKS

4-13. The most common failure or damage to a bridge is to the deck. Partial demolition or structural failure of the flooring, stringers, or arch crowns may cause gaps. The discussion below assumes that the original deck or the approaches on both sides of the gap are still intact or that adequate support exists around the same elevation as the undamaged deck.

Considerations

4-14. Use a military bridge design when developing a plan for deck repair. Consider the—

- Moment and shear capacities of the stringers, flooring, trusses, and so forth.
- End reactions of added components, including the rated capacity and the dead load of the structure.
- Bearing capacities of the end-support devices (which may require special care at some locations). For example, unless the computed end reactions are extremely small and can be placed anywhere on the deck of the remaining structure, employ special measures to support end reactions of the new sections directly over the piers or other supports.
- Resistance to impact where a change in deck elevation occurs (special end ramps may be necessary).
- Maximum slope of long ramps for traction (special deck surfaces may be necessary for traction).

Expedients

4-15. **Deck Balk.** When assembled as simple spans, deck balk from the M4T6 floating-bridge set can bridge gaps up to 45 feet.

4-16. **Bailey-Type Panel Bridging.** This bridging is the most versatile type of military stock bridging and can cover gaps up to 210 feet with a single-span structure. However, Bailey panels require more time to place than balk and may require more time to install than emergency expedients, depending on the circumstances. Some considerations are the gap length versus feasible bypasses, the availability of local materials versus availability of Bailey equipment, and the hauling distance.

4-17. **Timber Construction.** Dimensioned lumber is available through the military supply system or can be procured locally in most situations. Timber is extremely versatile for repairs. If the repairs are correctly designed and constructed, timber can be configured to carry any weight classification if enough of it is available for the job. Timber has a versatile layout, is usually available, and does not tie up tactical equipment.

4-18. **Log Construction.** The weight-carrying capacity of log construction is acceptable if it is correctly designed and constructed and if sufficient material of adequate size exists. Although more time is required to use logs than dimensioned lumber, logs may be easier to obtain and more economical.

4-19. **Existing Piers.** Bridge superstructures are much more susceptible to military demolition than piers. A bridge's superstructure may be nearly

destroyed while the piers remain intact and capable of supporting military bridging (emergency or otherwise). Existing piers used for repair must be sound all the way up to the level finally selected for the supporting pedestal. Most arch bridges or suspension bridges with masonry towers will have ragged tops. The tops of these towers must be made into level platforms or must be made usable. Offset the tops before using them as supports for military bridging.

4-20. **Dirt or Rock Fill.** An easy method of spanning gaps over dry crevices, shallow streams, or waterways with very low velocity is to fill the gap with dirt or rock. Except in extreme emergencies, make provisions for the passage of water that may be dammed by such a structure.

4-21. **Other Materials and Expedients.** There are many methods for applying local materials to repair gaps in bridge decks. Suitable solutions may simply require ingenuity on the part of the engineers and construction force.

REPAIRING PIER FAILURES

4-22. Demolitions, collisions, floods, debris, ice, or scour can cause pier failure. Grade and track-alignment requirements for railroad bridges present problems during pier repair that are not common in repairing highway bridges.

Major Pier Settlement

4-23. To determine if settlement has stabilized or if it is likely to continue, investigate the cause of the settlement. If it appears that settlement is likely to continue, stabilize the base of the pier with rock cribs, piles, or spread footings. The superstructure can then be jacked up and supported on the cribbing at the top of the old pier, or a new pier can be built around the old one.

Pier Failure, Top Portion

4-24. Failure of the top portion of the pier (where the superstructure rests) occurs on masonry piers. To repair this condition, jack the superstructure up off the pier, square the top of the pier, and place cribbing on top of the masonry to support the superstructure.

Scour

4-25. Excessive scour is a problem that has caused many bridge failures throughout the world. When enough soil is removed through water action around the pier, the pier fails. See *Chapter 7* for methods of preventing scour.

Expedients

4-26. **Standard Parts.** Many standard military-bridge items are extremely useful in emergency pier construction. The most adaptable construction item is the Bailey-type component *(FM 5-277)*. AFCS steel trestles also are versatile and are quickly assembled into many sizes, shapes, and capacities for use as emergency piers.

4-27. **Timber Piers.** Standard, dimensioned lumber can be used to make bents or crib piers for emergency pier construction. Such timbers lend

themselves to design flexibility, although more time is required to use dimensioned lumber than standard parts.

4-28. **Log Piers.** Timber from local sources can be effective for emergency construction of piers and bents. However, more time is required in their use than for any of the standard parts.

STRINGER SUPPORTS

4-29. Adding stringers increases the carrying capacity of the flooring. The disadvantage is that this method almost always requires removing the flooring. Analyze existing stringers according to the methods described in *paragraph 3-45* for timber, *3-62* for steel, and *3-67* for composite. Determine the number and size of necessary additional stringers by the design methods described in *Chapter 6*.

CONSIDERATIONS

4-30. Some viable structures require one additional stringer per lane. Place these stringers about one-fourth the lane width from each side of the lane's centerline.

4-31. Different materials have different stiffnesses, which must be considered when adding stringers. Steel has a much greater modulus of elasticity than timber, so its resistance to deflection is greater. Timber and steel stringers used together to support a bridge floor must have the same deflection resistance. The load each material carries is, among other factors, proportional to its deflection. The timber stringer will carry much less than its proportional share of the applied load, forcing the steel stringer to carry more than its proportional share. Avoid overstressing by using stringers similar to the original stringers' depth and material.

4-32. If available materials are not the same as those used for the original design, the decks of some spans may have to be removed for use on other spans of the structure and new decking may have to be placed on the empty spans. Each span of the structure will then have like members.

4-33. Connections for standard construction and material combinations are typical. However, problems such as connecting timber stringers to steel floor beams may require special solutions in the field. See *Chapter 9* for additional information.

REPAIRING CONTINUOUS SPANS

4-34. When stringers that are continuous over two or more spans have been damaged, they can be replaced with noncontinuous stringers that function as simply supported stringers. Slightly heavier (and in some cases deeper) stringers may be required since the maximum moments under loads are higher near the midspan for simply supported spans than for continuous spans. No additional strength will be required for shear because end shear is less in simple spans than in continuous spans. Simply supported stringers should be designed the same as for new bridges (*Chapter 6*).

4-35. Follow these steps to repair a bridge deck that is supported by steel stringers.

Step 1. Jack up the deck to clear the stringers.

Step 2. Place new stringers alongside the existing stringers.

Step 3. Remove the existing stringers.

Step 4. Move the new stringers laterally into the correct position.

Step 5. Lower the bridge deck to rest on the new stringers.

4-36. Bridge decks constructed of reinforced concrete T-beams are not usually salvageable because the slab is destroyed if it separates from the stem. Replace this type of structure if the damage is extensive. To avoid removing the damaged structure, place a new steel-stringer deck on top of the existing concrete deck, with at least 1 inch of clearance between the stringers and the concrete (add bearing plates on the concrete deck over the supports). This expedient method can only be used when there are adequate end bearings for the new stringers. Substructures adequate for continuous structures also will be adequate for simple spans, assuming that the dead load causes no further settling.

REINFORCING TRESTLE BENTS

4-37. After strengthening the superstructure, consider whether the substructure bents need strengthening to carry the increased load. Reinforce posts by nailing 2- x 6- or 2- x 8-inch planks to the posts *(Figure 4-4)* and by adding another post if necessary *(Figure 4-5)*. Drive solid, tapered wedges between the top of the new post and the cap beam, and nail them in place to prevent dislodgment.

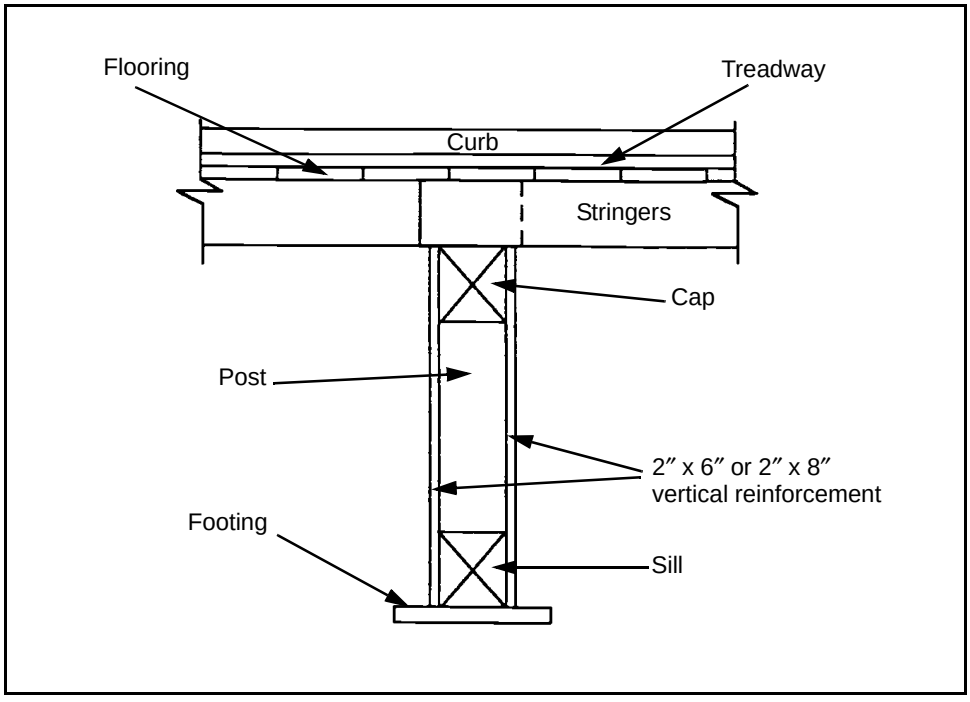

Figure 4-4. Timber-Trestle Reinforcement Post

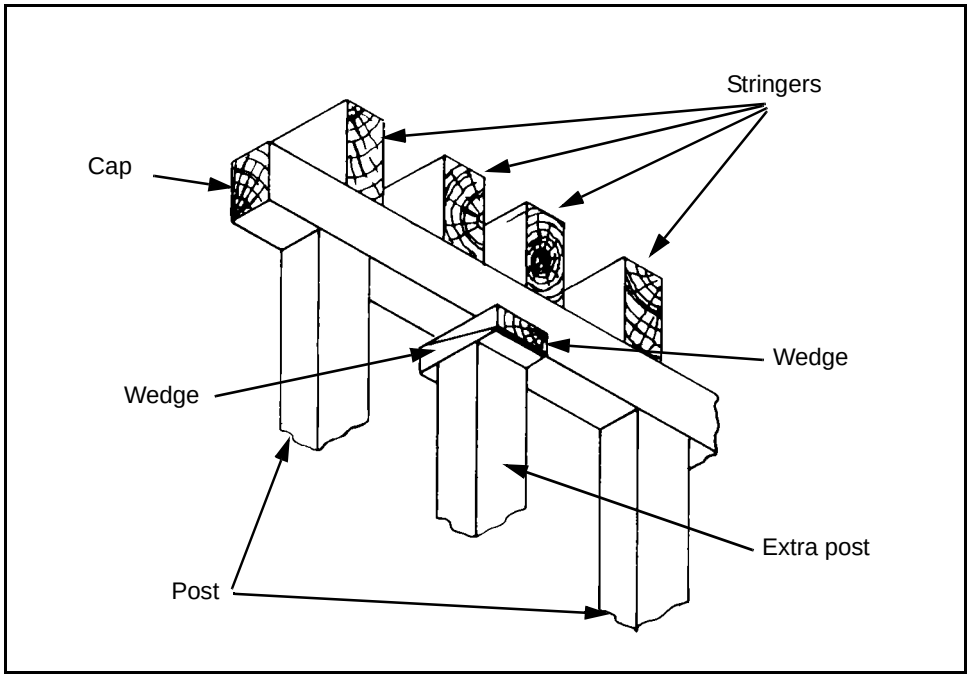

Figure 4-5. Installation of an Extra Post

STRINGER REINFORCEMENT

4-38. Stringer reinforcement can be accomplished in several different ways. The paragraphs below describe various methods.

EXTRA FLOOR BEAM

4-39. An extra floor beam can be added on a truss or girder bridge if the beam can be supported and connected at the panel points. Place the beam beneath the stringers so that it carries the stringer loads by bearing only instead of with a shear connection, which is typical of regular construction. Installing the floor beam in a truss involves special problems, unless the bottom chord has been designed to carry loads between the panel points. In most cases, suspend the new floor beam from the tension rods that are connected at the panel points of the chord. The new stringer capacity depends on the moment and the shear capacities.

KING OR QUEEN TRUSS

4-40. An inverted king or queen truss can supply additional stringer support *(Figure 4-6, page 4-10)*. This type of support does not require a bent or pier, which is advantageous where a new support would be excessively tall or when footing conditions or stream velocity would create additional problems. The disadvantage of this method is that the truss requires the stringer to function as a member of the truss, which causes it to become a compression member resisting both direct and stress bending. All stringers used in the span should provide equal load-carrying capacities. The most practical king truss is one made of a short section of a standard timber bent, with a cap and sill.

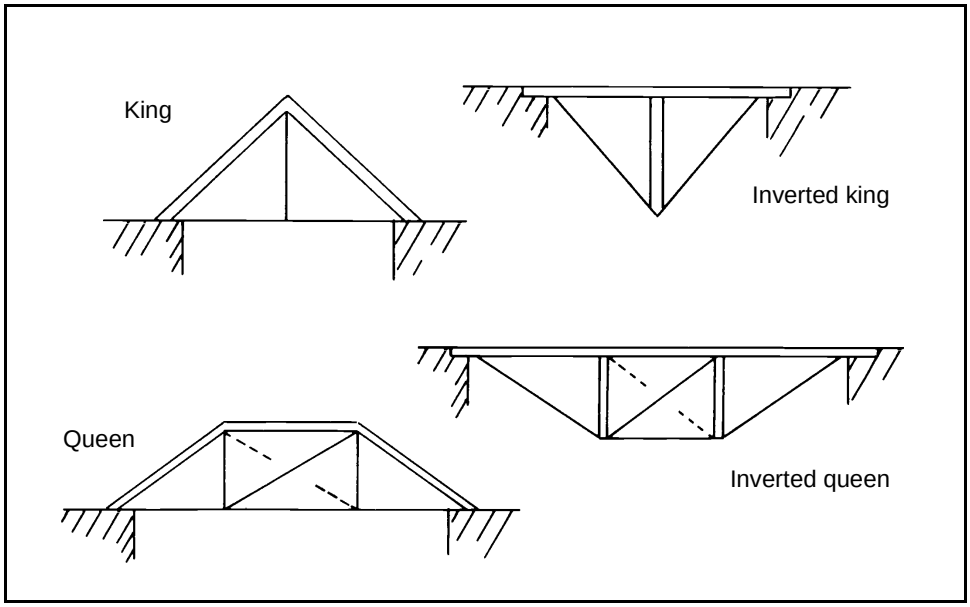

Figure 4-6. King and Queen Trusses

A-FRAME

4-41. Several types of A-frames are effective for providing additional stringer support *(Figure 4-7)*. A-frames may not require additional footings. Adequately brace substructure bents longitudinally for spans adjacent to those in which an A-frame is placed. Doing this helps the bridge resist the horizontal forces acting through the members of the frame.

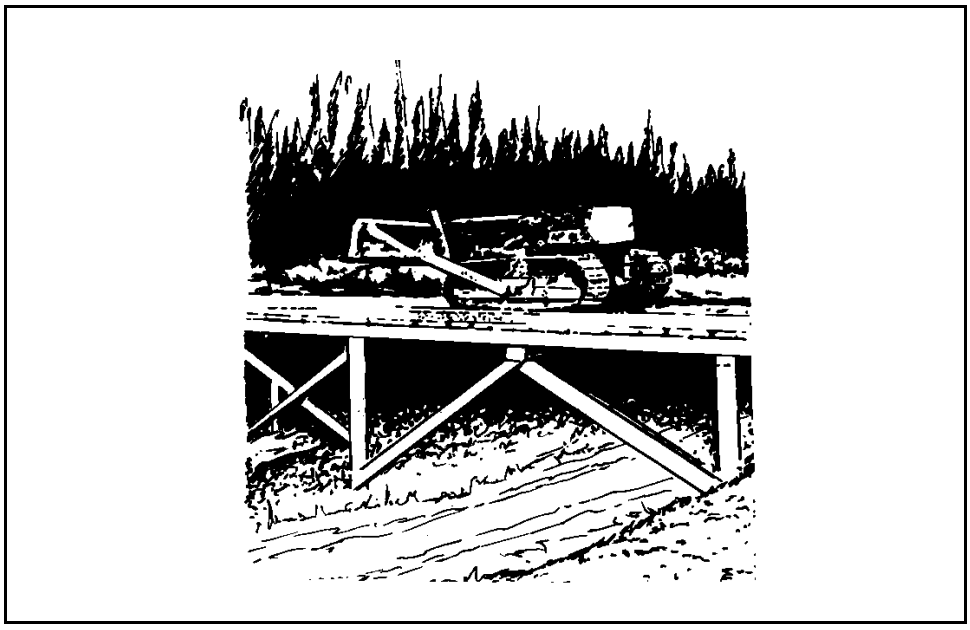

Figure 4-7. A-Frame

KNEE BRACES

4-42. Use knee braces *(Figure 4-8)* the same as for A-frames. Firmly anchor the piers against lateral movement for this arrangement.

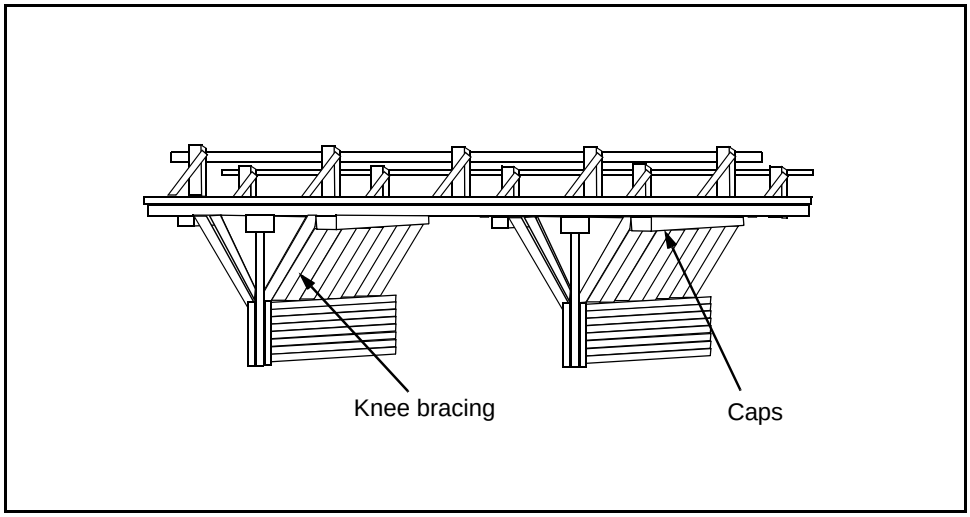

Figure 4-8. Knee Brace

BENTS, PIERS, AND TOWERS

4-43. Bents, piers, and towers may also provide stringer support. See *Chapter 7* for additional information. The main consideration is the economy of time and material. The requirements for adequate footings or for tall structures may take more time and material than adding stringers to the superstructure.

STEEL FLOOR-BEAM REINFORCEMENT

4-44. Floor beams are exceptionally difficult to reinforce because of the construction details and loading characteristics. Steel stringers connected to the webs of the steel floor beams prohibit placing additional beams beside the existing beams. One way to reinforce steel floor beams is to weld plates to the top and bottom flanges (if the two flanges can be exposed). Place additional beams (if necessary) below the existing floor beam if they can be adequately connected to the main supporting structure. If the stringers are above the existing floor beams, place additional floor beams beside the existing ones or on both sides of each (if necessary). The connections to the supporting structure may create a problem that must be solved according to the details of the particular structure involved.

TRUSS REINFORCEMENT AND REPAIR

4-45. A truss is a major load-carrying structure composed of straight members intersecting at panel points. The straight members form triangles in which the primary stresses are tensile or compressive rather than flexural. The bottom chord is ordinarily a tension member throughout its length,

whereas the top chord is a compression member. The chords resist the moment in the truss span, while the web members (verticals and diagonals) resist the shear. Each member is designed to provide for the maximum direct stress that it is expected to resist.

4-46. Trusses are advantageous for long spans because they are able to carry greater loads, in proportion to their weight, than would be possible with solid members such as plate girders. Although the fabrication cost of trusses is high, their use reduces the overall dead load of the structure. Truss analysis is discussed in *Chapter 3*.

4-47. Trusses are often intact and require little repair. If a single member has been damaged it should be repaired. In some cases, a truss may be intact; however, a pier fails and the truss dislodges from its piers. In such cases, jack the truss back up onto its original pier or onto a repaired pier. Seldom can trusses be completely replaced. They are usually repaired or reinforced. In most cases, reinforcing the flooring and the stringers is satisfactory. However, the truss members may need to be reinforced if stress analysis indicates that the structure is inadequate and additional supports are not practical. Truss-member reinforcement may consist of—

- Replacing existing members with heavier sections.
- Increasing the capacity of existing members by adding material.
- Adding additional supports at panel points.

INTERMEDIATE SUPPORTS

4-48. Additional intermediate supports are the simplest, most effective means of strengthening a truss (if the truss characteristics and the situation allow). The practicality of using intermediate supports will depend on the required height, spacing, footing conditions, stream characteristics, and so forth. Some situations could require more material and time than would be required for discarding the old span and building a new structure on the existing piers. The intermediate supports (pile piers, timber bents, towers, or any of the standard prefabricated steel components [such as the Bailey]) may be any of the various means of transferring loads to the ground.

4-49. Always locate intermediate supports at panel points. Supports located in other areas will produce bending stresses in the chord members, which will result in structure failure. Carefully select panel-point supports to avoid stress reversals. Determine the locations of the intermediate supports only after a structural engineer carefully analyzes the stresses resulting from the assumed location of supports. Should the analysis indicate that any members are inadequate to carry the resulting forces, change the support locations or strengthen the members.

CONNECTIONS

4-50. Reinforcing connections is just as important as reinforcing members to avoid failure. Connections between steel tension and compression members are usually made with splice plates that are welded, riveted, or bolted to the members.

REINFORCING COMPRESSION MEMBERS

4-51. The strength of a compression member depends on the cross-sectional area of the steel section and on the arrangement of the area about the section centroid. Considering buckling resistance, 1 square inch of steel that is 10 inches from the centerline is four times as effective as 1 square inch of steel that is 5 inches from the centerline. Member stiffness is a function of the member's smallest width. For example, the stiffness of a 12- x 16-inch rectangular section is governed by the 12-inch dimension. The stiffness is also affected by the ratio of the effective unsupported length of the least radius of gyration. The slenderness ratio is computed as follows:

$$R_s = \frac{KL}{r} \qquad (4\text{-}1)$$

where—

R_s = *slenderness ratio*
K = *effective length factor (Table D-9, page D-9)*
L = *member length, in inches*
r = *least radius of gyration, in inches (paragraph D-15)*

4-52. Increase the stress-carrying capacity of a compression member by adding plates or shapes on the outside of the section and by adding extra plates to the existing member *(Figure 4-9A)*. Assume that the added strength is proportional to the increase in area if the following conditions are observed:

- The plates or shapes are added on the outside of the section.
- The attachment (riveted or bolted) is designed to cause the new section and the old section to act together.
- The new member is continuous from one end to the other or is properly spliced.
- The end connections of the member are adequate for the new stress.

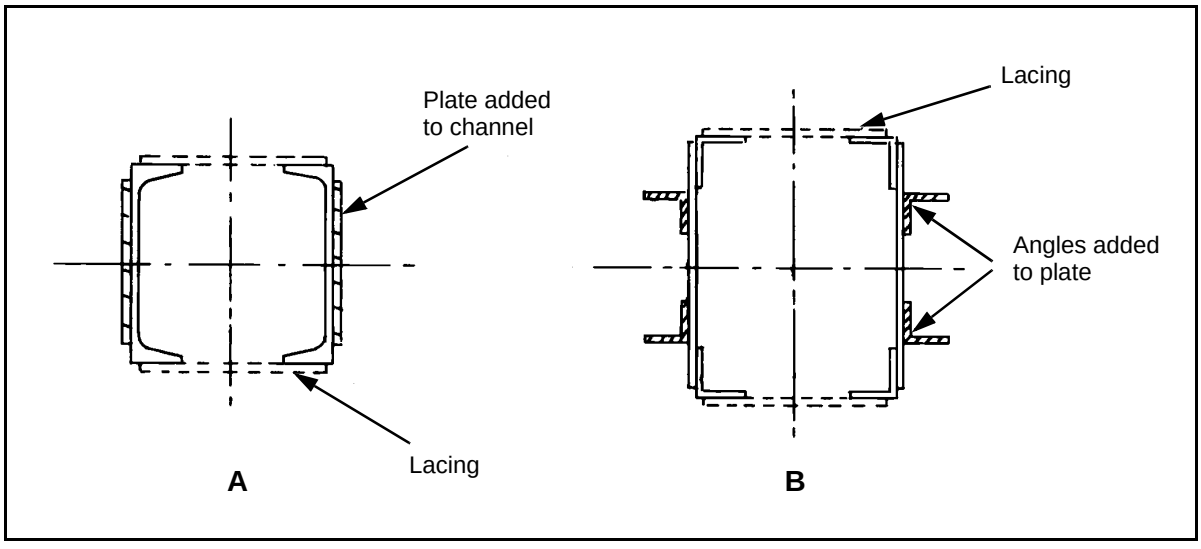

Figure 4-9. Strengthening Truss Members

4-53. Reinforce truss compression members as described in the example below. Reinforce an existing steel-truss compression member with riveted and bolted members *(Figure 4-9A, page 4-13)* to carry a total force of 350 kips. Each standard channel is 12 inches high and weighs 0.0207 kpf. The back-to-back distance of channels is 12 inches. The member length is 340 inches from panel point to panel point.

Load Capacity

4-54. Use the steps in the following example to determine load capacity:

Step 1. Find the area for the two channels using the web area *(Table D-2, pages D-3* and *D-4)*. For this example, the channel area is 12.2 square inches.

Step 2. Find the radius of gyration in *paragraph D-15*. For this example, the radius of gyration is 4.61 inches.

Step 3. Find the slenderness ratio as follows:

$$R_s = \frac{KL}{r} = \frac{0.75(340)}{4.61} = \frac{255}{4.61} = 55.31 \quad (4\text{-}2)$$

where—

R_s = *slenderness ratio*
K = *effective length factor (Table D-9, page D-9)*
L = *member length, in inches (paragraph 4-53)*
r = *radius of gyration, in inches (step 2)*

Step 4. Find the allowable unit stress for the column (assume American Society for Testing and Materials [ASTM] A36 steel) from *Table 3-6, page 3-25*. For this example, the allowable unit stress is 17.9 ksi.

Step 5. Find the maximum compressive load as follows:

$$P = F_a A = 17.9(12.2) = 218 \text{ kips} \quad (4\text{-}3)$$

where—

P = *maximum compressive load, in kips*
F_a = *allowable axial compressive stress, in ksi (step 4)*
A = *area of the two channels, in square inches (step 1)*

Plate Additions

4-55. Recompute for load capacity if plates are added to the members. For this example, use the numbers from the example in the previous paragraph. Compute as follows:

Step 1. Find the total channel area by adding two 11- x 1/4-inch plates to the original channel area:

$$A_t = A + A_p = 12.2 + 2[11(0.25)] = 17.7 \text{ sq in} \quad (4\text{-}4)$$

where—

A_t = *total channel area, in square inches*
A = *original channel area, in square inches (paragraph 4-54, step 1)*
A_p = *plate area, in square inches*

Step 2. *Use 4.61 inches for the radius of gyration (paragraph 4-54, step 2).*
Step 3. Use 55 for the slenderness ratio *(paragraph 4-54, step 3).*
Step 4. Use 17.9 ksi for allowable unit stress *(paragraph 4-54, step 4).*
Step 5. Find the maximum compressive load as follows:

$$P = F_a A_t = 17.9(17.7) = 316.8 \text{ kips} \quad (4\text{-}5)$$

where—

P = *maximum compressive load, in kips*
F_a = *maximum compression, in ksi (step 4)*
A_t = *total area of the two channels, in square inches*

4-56. The result is an increase of 45 percent over the original capacity of 218 kips. Bolt, rivet, or weld the added 1/4-inch plates rigidly to the channels to make them part of the member. Connect the reinforcing plates with sufficient strength to develop the plates. With the length as the center-to-center spacing of the bolts, rivets, or welds, space the connecting elements between the ends so that the slenderness ratio is not greater than the entire member.

REINFORCING TENSION MEMBERS

4-57. Tension members are often steel bars, rods, wire, or cable. Arrangement of the area has no great effect on a tension member. Increase the area by placing the rods or the cables alongside the existing members and tightening them with turnbuckles. The truss tension member shown in *Figure 4-9B* consists of two 18- x 3/8-inch plates and four 3- x 3- x 3/8-inch angles. The example below further explains reinforcing tension members.

Area of the Tension Member

4-58. Compute the area of the tension member as follows:

$$A_1 = N_{pl}A_{pl} + A_a N_a = 2(18)\left(\frac{3}{8}\right) + 4(2.11) = 21.94 \text{ sq in} \quad (4\text{-}6)$$

where—

A_1 = *area of the tension member, in square inches*
N_{pl} = *number of plates*
A_{pl} = *plate area, in square inches*
A_a = *angle area, in square inches*
N_a = *number of angles*

Maximum Tensile Load

4-59. Compute the maximum tensile load as follows:

$$P_1 = F_t A_1 = 27(21.94) = 592.38 \text{ kips} \quad (4\text{-}7)$$

where—

P_1 = *maximum tensile load, in kips*
F_t = *allowable tensile strength for the steel, in ksi (Table 3-6, page 3-25). For this example,* $F_t = 0.75F_y$. *Using A36 steel,* $I_y = 36$; *therefore,* $F_t = 27$.
A_1 = *total area of the tension member, in square inches*

Angle Addition

4-60. Add four 2 1/2- x 2 1/2- x 1/4-inch angles and recompute.

Step 1. Find the tensile area of the angles as follows:

$$A_2 = N_a A_a = 4(1.19) = 4.76 \text{ sq in} \quad (4\text{-}8)$$

where—

A_2 = *total area of the angles, in square inches*
N_a = *number of added angles*
A_a = *area of each angle, in square inches*

Step 2. Find the total member area as follows:

$$A = A_1 + A_2 = 21.94 + 4.76 = 26.7 \text{ sq in} \quad (4\text{-}9)$$

where—

A = *total member area, in square inches*
A_1 = *area of the tension member, in square inches*
A_2 = *area of the angles, in square inches*

Step 3. Find the maximum tensile load as follows:

$$P = F_t A = 27(26.7) = 720.9 \text{ kips} \quad (4\text{-}10)$$

where—

P = *maximum tensile load, in kips*
F_t = *allowable tensile strength for the steel, in ksi (Table 3-6). For this example,* $F_t = 0.75F_y$. *Using A36 steel,* $I_y = 36$; *therefore,* $F_t = 27$.
A = *total member area, in square inches*

The result is a 22 percent increase over the original force of 636 kips. End connections must develop the full strength of each reinforcing angle, but intermediate connections may be located at nominal spacing.

REPLACING DAMAGED MEMBERS

4-61. Bent or twisted steel-truss members may be impossible to repair while they remain in the truss. Remove such members from the truss by dislodging them from the end gusset-plate connections. Straighten bent and twisted parts or repair damaged and broken parts, if possible. It is usually best to replace such members with identical fabricated sections. A truss member with bolted connections is relatively easy to remove. In riveted trusses, cut off the rivet heads and force the rivet shank out. Truss members with welded end connections are nearly impossible to remove. If the truss is to remain in position while the damaged members are replaced, try to prevent truss failure when removing the damaged members. Use cribbing under the truss where the replacements are being made (if the site conditions permit crib construction). Otherwise, use straps or cables to carry the dead-load stress of the removed member.

FLOORING REPAIR

4-62. The flooring of existing civilian bridges is usually designed to conform to the bridge's capacity. However, the difference of military loads and wheel arrangements of military vehicles may require heavier floors than those assumed for a given stringer design. The reinforcement of the main bridge members may require that the flooring be strengthened for the desired MLC. Further, bridge floors in existing structures may have considerable wear or damage that greatly reduces its usefulness. For example, many timber floors in civilian structures consist of a single layer of decking, without a tread to protect the deck from wear. Always check the floors during a bridge analysis or classification.

TIMBER

4-63. Timber is the most common bridge flooring in foreign countries. A popular form consists of one layer of decking, perpendicular to the bridge centerline, without an added wearing surface. When wearing surfaces exist, they may be of several types (ribbon tread or a tread covering the entire surface) that are similar to US standard military construction for semipermanent bridges. Other surfaces may consist of bituminous macadam that is applied monolithically or is in preformed planks. The use of treated or untreated wood blocks is also common.

4-64. Another method is to reinforce existing timber floors with an additional layer of decking and tread. This method may require removing the original wearing surface. The most practical solution in most cases is to replace the existing floor with a timber floor. If standard lumber is not available, use local lumber or squared logs.

STONE MASONRY

4-65. In some parts of the world, bridges are built almost exclusively of stone. Often they are a simple masonry-arch bridge with a horizontal deck. The flooring for these bridges is often cobblestone or larger stones set over a rubble fill between the supporting arch and the road surface. Failure may occur because of wear, stone dislodgment, failure of supporting fill, military

demolition, or accidents. If the bridge is in place, the floor is likely to be intact except for potholes, which may be patched with concrete. Bituminous macadam or concrete topping makes an ideal wearing surface. Flooring reinforcement for this type of bridge is not necessary except for installing a wearing surface.

CONCRETE

4-66. In Europe, some concrete bridge floors have thinner sections than those in the US. Stringer and floor replacements are frequently required to repair these bridges.

MASONRY-PIER AND -ABUTMENT REPAIR

4-67. Permanent masonry piers and abutments are seldom destroyed. Use them to the fullest extent possible in bridge repair. First, clear damaged piers and abutments of all loose debris. Then clean them down to solid material, leaving a level platform. Some damaged structures may require two or more benched levels, depending on the details of the structure. Standard steel panels and trestle units make ideal combinations for either constructing new piers and abutments or repairing existing structures.

4-68. Large cracks in masonry may not be serious, depending on the type of crack and the direction of the forces on the structure. For example, a horizontal crack in a massive masonry pier may not be serious, but it may be critical in an abutment. Vertical cracks may be permissible under certain conditions. Large diagonal cracks are usually highly undesirable, unless they are in the wing walls of an abutment where they are easily repaired.

4-69. Repair cracks by banding the structure with straps (steel or iron) or beams pulled tightly (by straps) in the direction that tends to close the crack. Grout or seal cracks to allow bearing and shear stresses to transfer and to prevent the accumulation of water inside the structure.

BAILEY-TYPE COMPONENT

4-70. The Bailey-type component is ideal to use in repairing destroyed and damaged piers and abutments. The basic unit and the various special parts lend themselves to an infinite number of combinations that provide the desired capacity, height, or arrangement. *FM 5-277* describes the components and their uses for these purposes. *Figures 4-10* and *4-11* show ways to use the Bailey panels for repairing damaged piers and abutments.

HYDRAULIC EFFECTS OF ADDITIONAL SUPPORTS IN WATERWAYS

4-71. Waterways usually adjust themselves to existing piers or abutments. However, new piers and abutments may have an immediate influence on the hydraulic behavior of a waterway. Any obstruction placed in flowing water creates turbulence and slows the flow near the obstruction proportionately greater than the actual width of the object. Some bridging situations require constructing many new piers, which appreciably restrict water flow. The volume of water that must pass through the bridge site cannot be altered except by diversion. If the area is constricted by piers, the waterway must

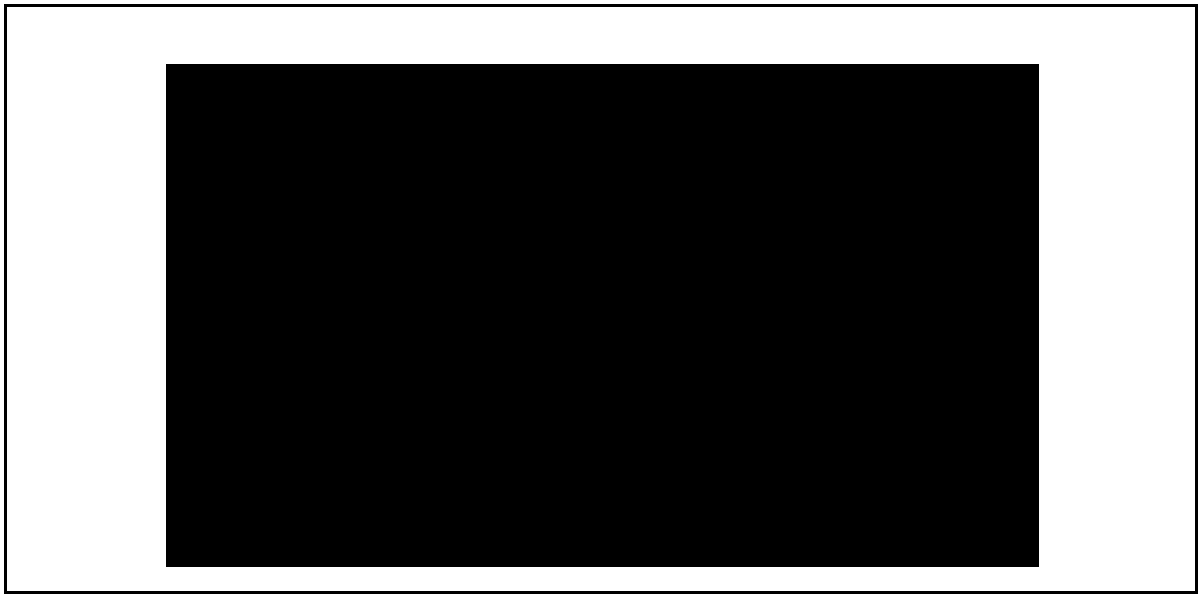

Figure 4-10. Bailey Panels Over a Broken Masonry Arch

Figure 4-11. Bailey Panels Over a Demolished Masonry Arch

retain its flow by increased water depth and velocity between obstructions. Turbulence and increased velocity cause scouring and require special protective measures such as those outlined in *Chapter 7*.

4-72. A stream's ability to carry sediment varies with the velocity. For streams with a high-sediment content, local velocity reduction may cause the sediment to drop. This deposited sediment creates an additional obstruction that modifies the water flow. Therefore, it is best to keep new obstructions to a minimum in flowing water. When bridging considerations require a large number of new piers, it may be necessary to divert part of the water through culverts that are placed in the approach fill.

MASONRY-ARCH-BRIDGE REPAIR

4-73. Masonry bridges present problems in reinforcement and repair different from other types of bridges. Piers of multiple-span masonry-arch bridges are designed so that the horizontal components of dead-load thrust from the two arches meeting on a pier balance each other. When a span is destroyed, the unbalanced horizontal forces from the remaining spans (arches) tend to overturn the piers on either side of the gap, causing collapse (unless suitable repairs are made). Many masonry-arch bridges have piers thick enough to eliminate reinforcing the piers that are adjacent to the demolished arches. If piers are thicker than one-fifth the span and are in good condition, test loadings are recommended before undertaking reinforcement.

4-74. *Figure 4-12* shows the forces in a masonry arch. If a standing pier is a massive structure, assume that it is stable enough to withstand the horizontal dead-load thrust of the arch. Therefore, design the new construction to resist only the horizontal live-load thrust plus impact. The total horizontal force required to resist the horizontal live-load thrust on a pier, including impact, is the total of the horizontal dead-load and live-load thrusts. Both components are computed as follows:

$$H_{DL} = \frac{W_{DL}L}{8R'} \qquad (4\text{-}11)$$

where—

H_{DL} = *horizontal dead-load thrust, in kips*
W_{DL} = *dead load of the pier, in kips*
L = *span length, in feet*
R' = *rise of the arch, in feet*

and—

$$H_{LL} = \frac{W_{LL}L}{4R'} \qquad (4\text{-}12)$$

where—

H_{LL} = *horizontal live-load thrust, in kips*
W_{LL} = *live load of the pier, in kips*
L = *pier length, in feet*
R' = *rise of the arch, in feet*

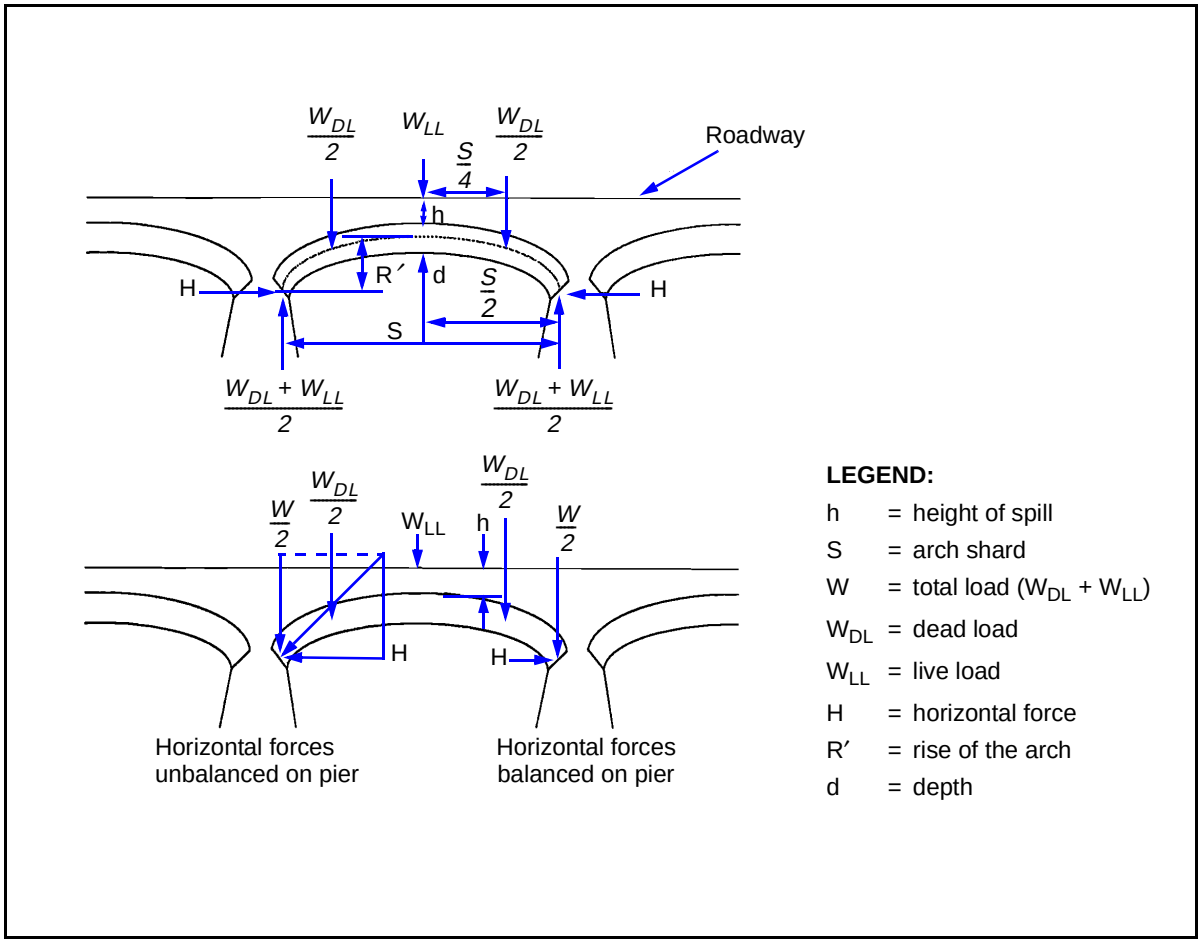

Figure 4-12. Forces in Masonry Arches

REPAIR METHODS

4-75. There is not a "most suitable" method of repairing masonry-arch bridges. After considering the acting forces, available materials, site conditions, and results of previous solutions, use the methods discussed below (individually or in combination) to solve the problem.

Demolition

4-76. Where all arches but one of a multispan bridge have been destroyed, demolish the remaining arch (especially if it is shattered). Complete the demolition before materials and equipment to be used for reconstruction arrive on the site.

Ties in Adjacent Arches

4-77. Unbalanced horizontal live-load thrust can be distributed to interior piers by placing tie rods across the spans next to the gap. This is the best method if rock drills are available. The tie rods allow a crane to repair the

main gap on the spans safely. Place the tie rods at about the level of the springing lines and anchor them to the piers by any of the following methods:

- **Tie rods through piers.** Connect the ends of the tie rods to the steel wall plates or the beams extending across the back face of the piers *(Figure 4-13)*. This method is not practical if heavy rock drills are not available.
- **Tie rods attached to steel plates.** Attach the tie rods to the steel plates that are anchored to the sides of the piers by the bolts that are set in concrete *(Figure 4-14)*. Clusters of light steel rails also make good tie rods *(Figure 4-15)*.
- **Tie rods around piers.** Bend the tie rods around the piers where they bear against a frame that is supported by pieces of rail set in the face of the pier *(Figure 4-14)*.
- **Tie rods attached to I-beams.** Attach the tie rods to the I-beams that extend across the back face of the pier *(Figure 4-16)*.
- **Turnbuckles and wedges.** Tighten and maintain the tension in tie rods with turnbuckles, tie rods with threaded ends, or wedges. Threaded connections should be as strong as the ties in tension. In a long span, use sag rods to support the rods that are under the arch *(Figure 4-13)*.

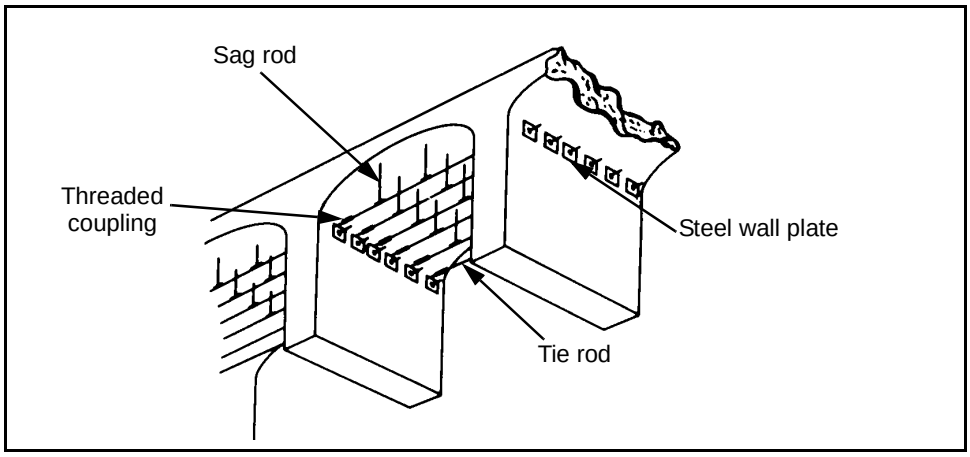

Figure 4-13. Tie Rods Connected to Wall Plates

Struts Across the Gap

4-78. **Spans Under 25 Feet.** When the main gap is short and materials are available, timber struts placed across the gap at the springing level provide resistance against the unbalanced horizontal thrust *(Figure 4-17, page 4-24)*. The struts bear against transverse wall beams that are supported on trestle bents erected against the inner face of the piers. Brace the structure longitudinally and laterally, and use wedges to obtain the full bearing of the strutting against the face of the piers.

4-79. **Spans Over 25 Feet.** Place trusses between the struts vertically *(Figure 4-18, page 4-24)*, place intermediate ground supports, or use horizontal bracing. Arrange the intermediate supports to allow the demolished piers in the gap to be rebuilt and to support rebuilt arches.

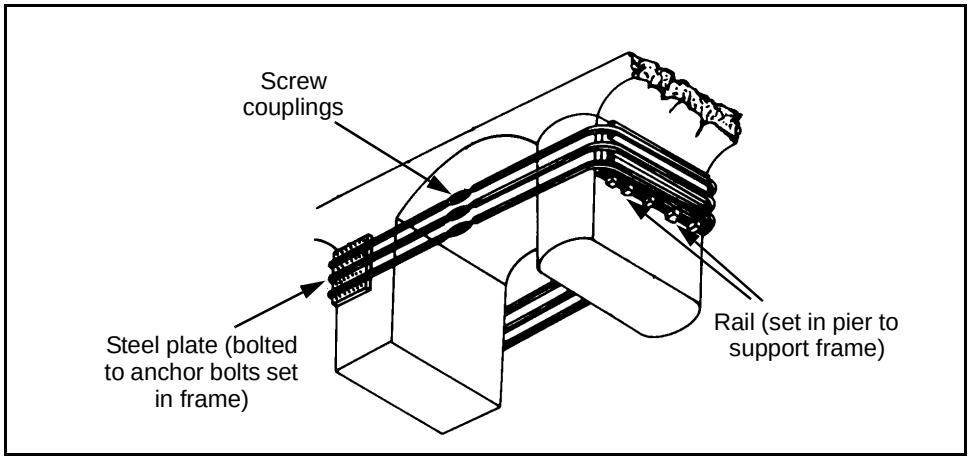

Figure 4-14. Bolts Set in Concrete

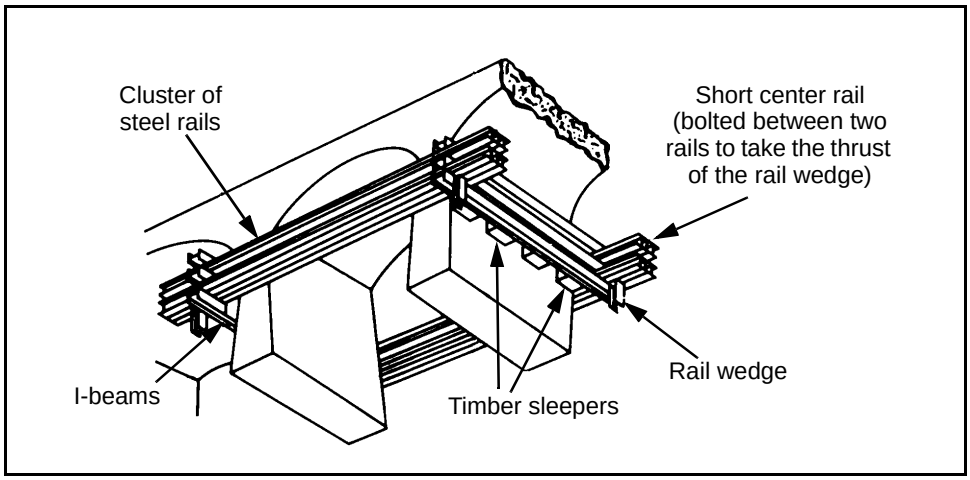

Figure 4-15. Tie-Rod Clusters

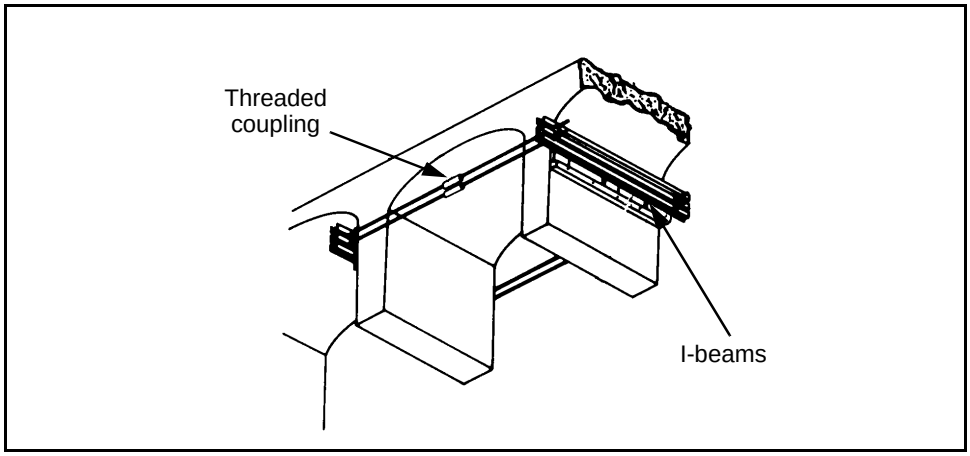

Figure 4-16. Tie Rods Attached to I-Beams

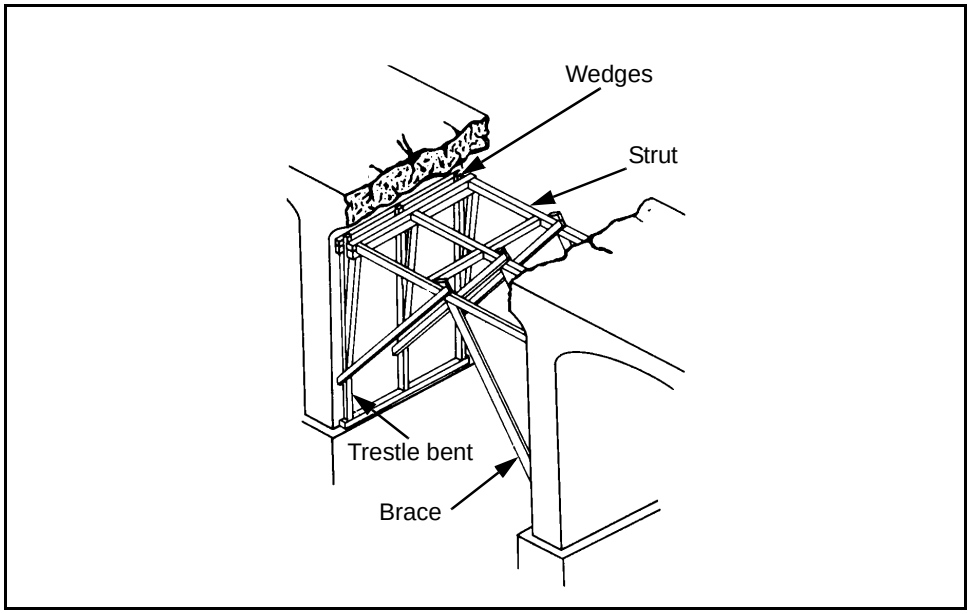

Figure 4-17. Timber Struts Across a Short Span

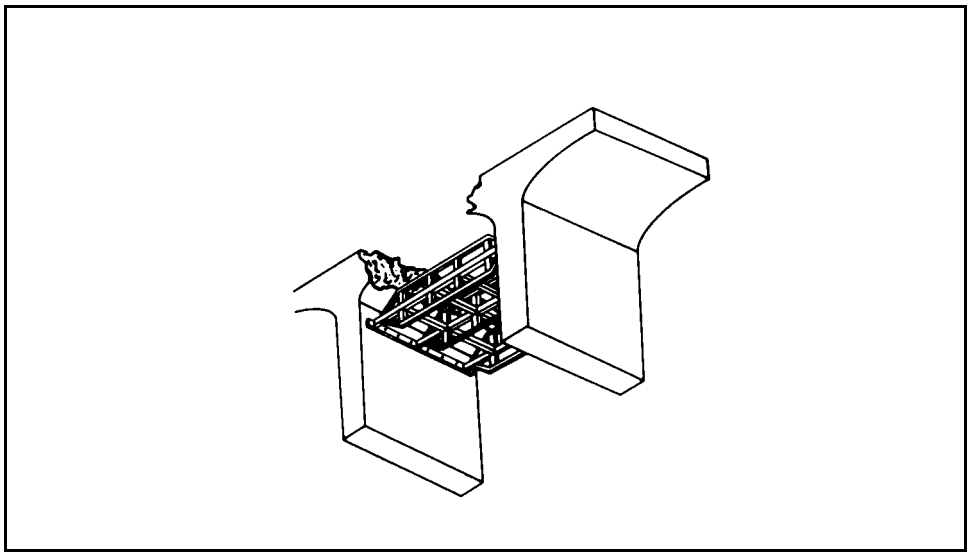

Figure 4-18. Trussed Struts Across a Long Span

4-80. **Buttresses and Shoring.** Demolishing several successive piers leaves a gap too wide for strutting. In such cases, construct a buttress wall or a shoring of mass concrete, rubble, masonry, or brickwork *(Figure 4-19)*.

4-81. **Relieving Girders.** One of the easiest repair methods is to bridge the span next to the gap with relieving girders *(Figure 4-20)*. Usually, the load will not have to be relieved from arches that are intact. However, in multiple-arch viaducts, relieving girders may be required on each side of the gap. Rail clusters; I-beam spans; plate-girder spans; or through-type, standard steel bridges are the best relieving girders, since low construction is essential.

Simple spans should meet on the centers of the piers. Continuous-span bridges are supported on the centers of the piers.

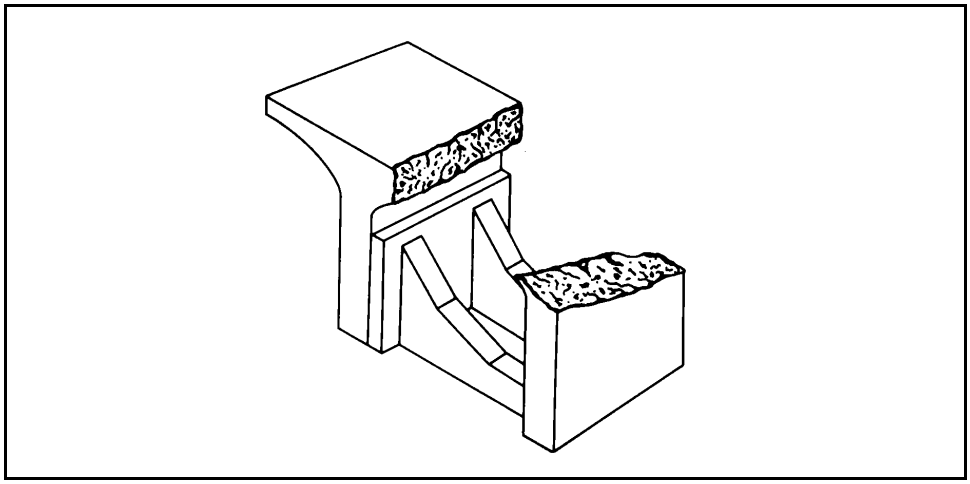

Figure 4-19. Masonry or Concrete Buttress

4-82. Unless there is time to provide even bearing and to grout anchor bolts, construct timber bridge seats with the ends of the girders resting on them, rather than directly on the masonry. Level the damaged masonry until all cracked portions are removed, and fill the holes with concrete. A perfect finish to the masonry surface under the timber is not necessary.

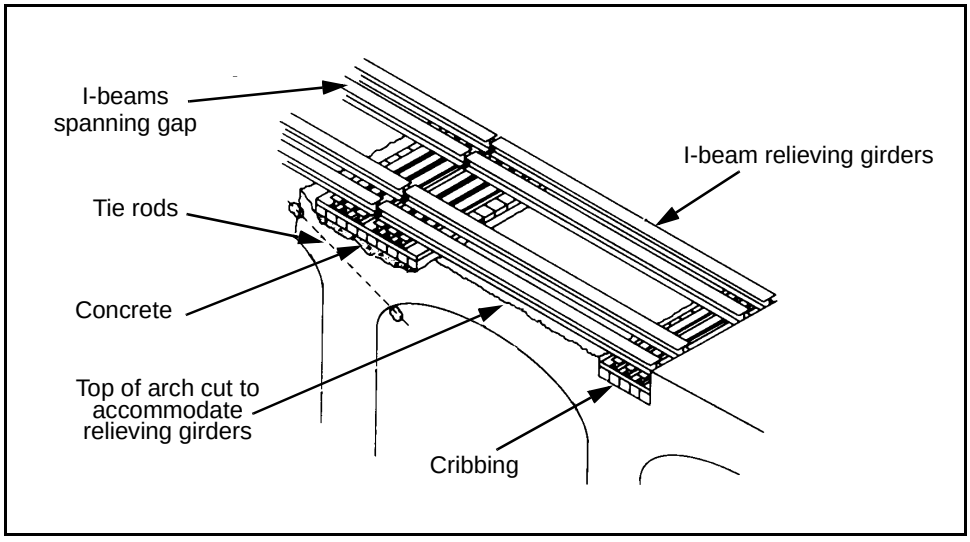

Figure 4-20. Relieving Girders

4-83. **Centering in Adjacent Arches.** Use timber framework (centering) where spans across the gap are shattered. This will prevent the spans from deforming and relieve the adjacent piers from horizontal thrust (*Figures 4-21* through *4-23, pages 4-26* and *4-27)*. Centering can be used in combination with tie rods and struts. If not using tie rods or struts to distribute the

horizontal thrust, ensure that the vertical framework supports are seated well down on the pier or independent of the pier under the arch. Design the framework to support the entire live load. The framework must support the arch in at least three places and must transmit the load to the piers. Do not wedge the framework too tightly against the arch because this may weaken the arch rather than strengthen it. Use only folding wedges to hold the bracing in place.

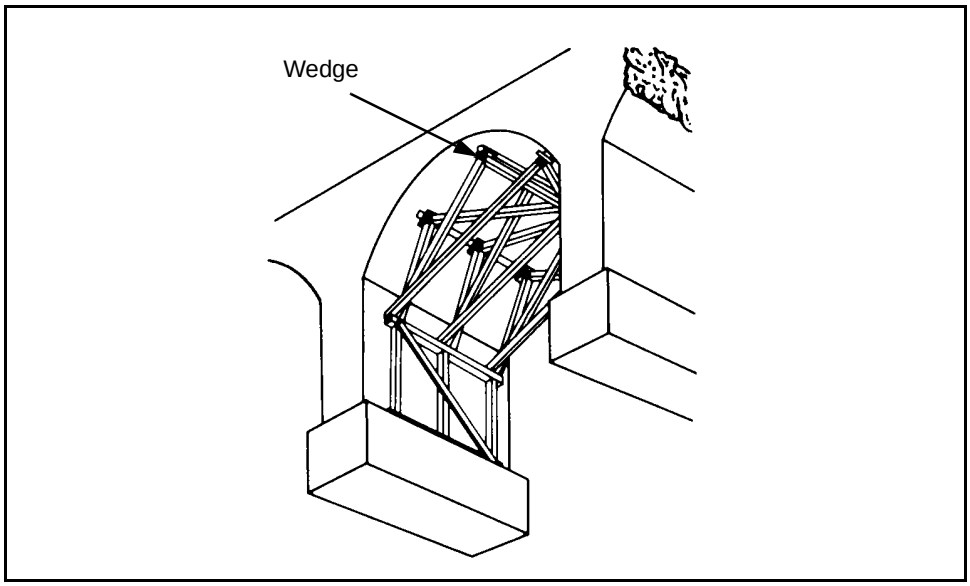

Figure 4-21. Pier Supports

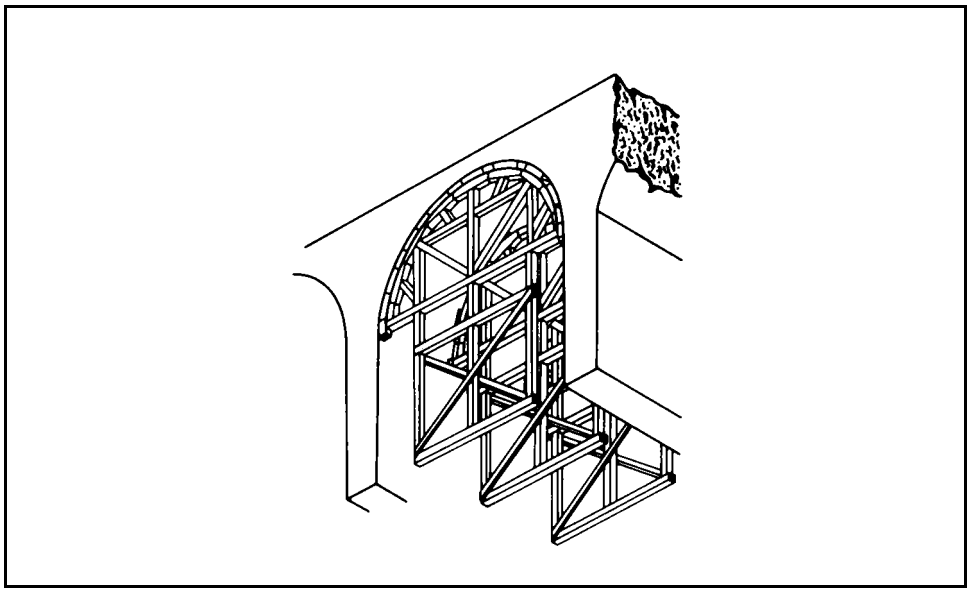

Figure 4-22. Intermediate Supports

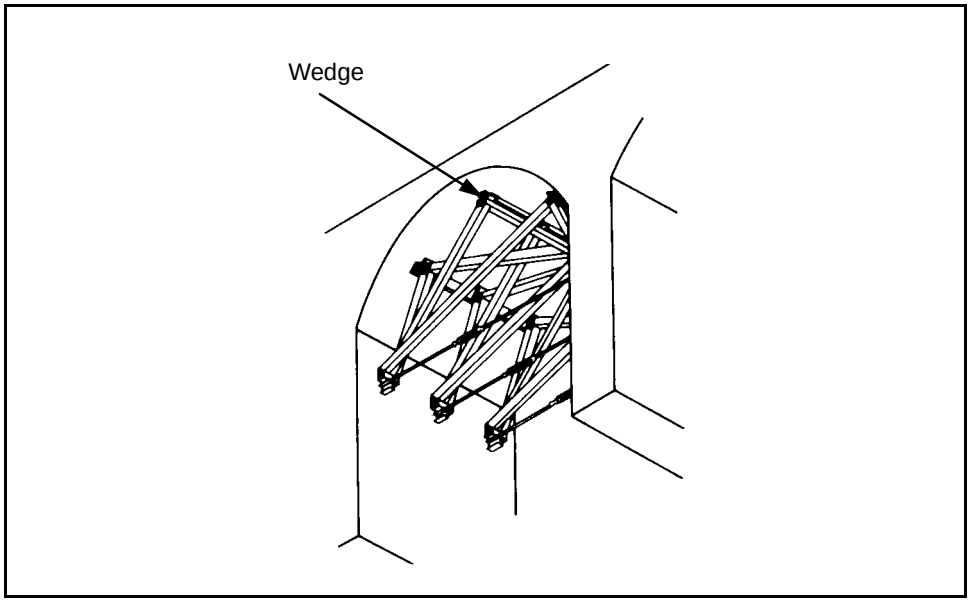

Figure 4-23. Tie Rods and Pier Supports

WIDENING MASONRY-ARCH BRIDGES

4-84. The main requirement for widening a roadway is that the existing structure has adequate strength to support the load of the additional roadway. Many arch bridges meet this requirement but are only wide enough for one lane.

4-85. *Figure 4-24, page 4-28,* shows a revision of a typical masonry-arch deck with a new concrete slab placed over it and supported by the existing bridge deck. Wheel loads on the cantilevered portion of the slab may be distributed over a 3-foot length of slab in the direction of traffic. Determine the slab thickness and the size and spacing of the reinforcing bars in the top of the slab from the dead- and live-load moments. Determine these moments at Section A-A *(Figure 4-24)*; do not rely on the concrete ribs for support. The ribs beneath the slab support the railing posts. Space these ribs 5 to 6 feet apart, center to center, and anchor them to the existing deck with anchored reinforcing rods set into drilled holes. Remove the existing railing or any portions of the existing structure that project above the roadway. Drill holes for the anchor rods and dowels, set the reinforcing steel in position, and place the concrete ribs and deck.

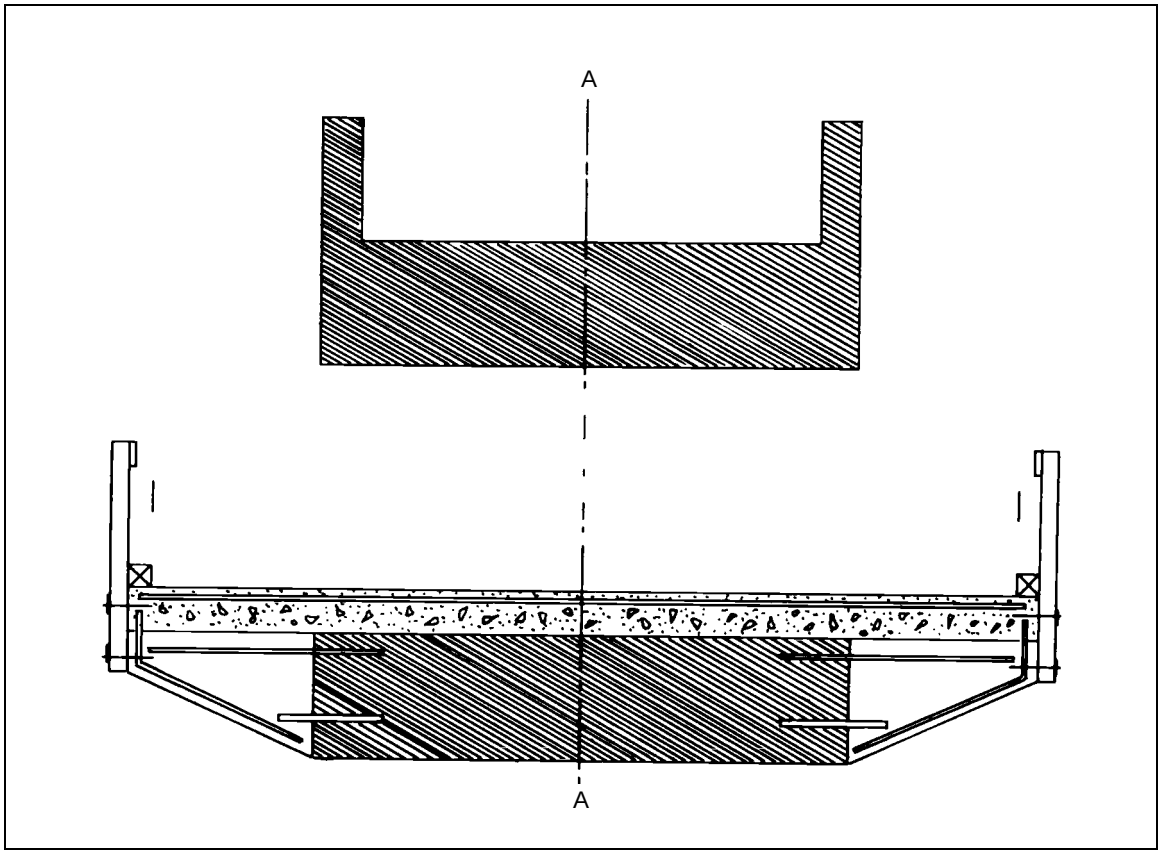

Figure 4-24. Widened Masonry-Arch Deck

Chapter 5

Posting

When a bridge is classified, it is assigned a bridge-classification number. This number represents the safe military load-carrying capacity of the bridge. Classifying units will post temporary classification markings on the bridges that they classify. If a nonengineer unit classifies a bridge, the responsible engineer unit will verify the classification as soon as possible and post the permanent bridge markings.

BRIDGE-CLASSIFICATION SIGNS

5-1. Do not post special classification numbers on standard bridge signs. Other signs, however, need to be placed where they will help maintain an even flow of traffic *(Figure 5-1)*. Place signs indicating height restrictions on the center of the obstruction (the same as civilian signs). The minimum overhead clearance is 15 feet 6 inches. Place advance warning signs on bridge approaches. Theater commanders may make special arrangements to indicate obstructions that will affect exceptionally wide vehicles or a low overhead.

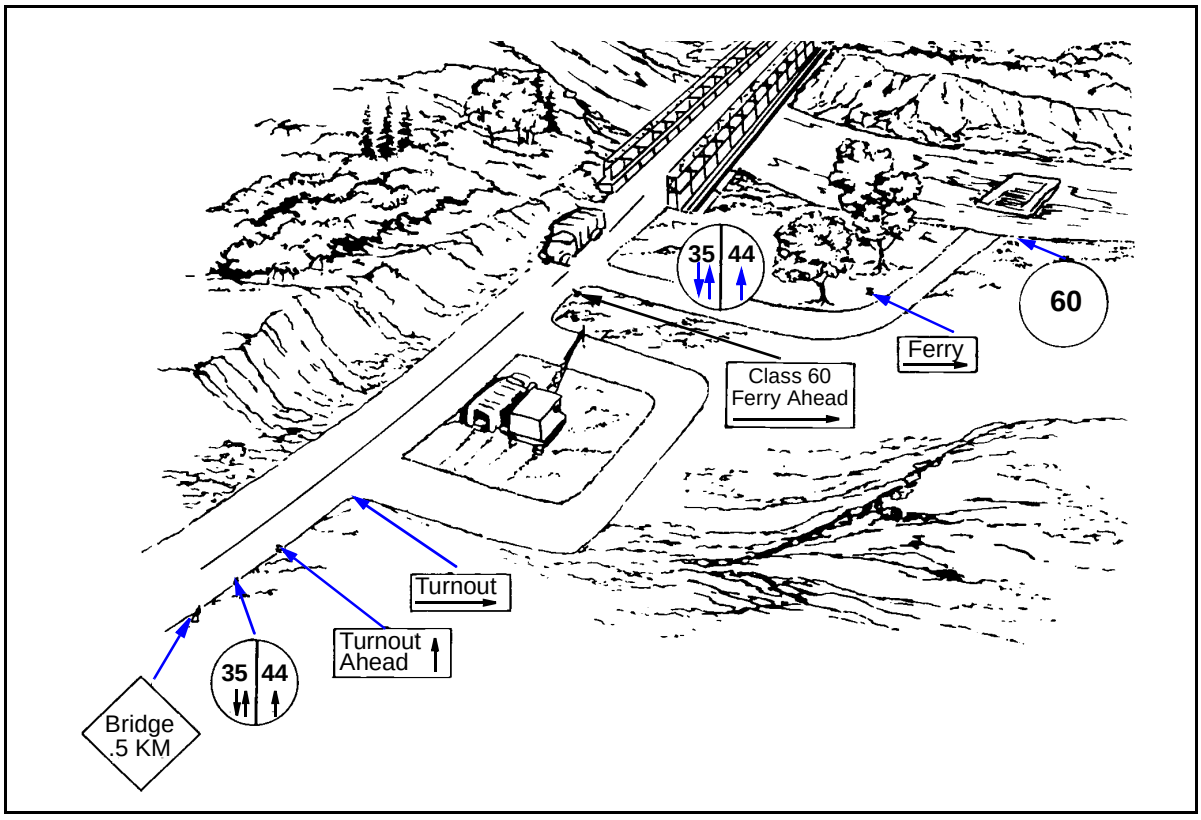

Figure 5-1. Standard Bridge Signs and Supplementary Signs

CIRCULAR-SHAPED SIGNS

5-2. All classified bridges in the TO are marked with circular signs to indicate the MLC. Place circular signs at both ends of the bridge so they are clearly visible to all oncoming traffic. These signs have a yellow background with black inscriptions as large as the sign allows. Circular signs come in two types—normal and dual-classification.

Normal

5-3. Signs for single-lane bridges are at least 16 inches in diameter *(Figure 5-2)*. Signs for dual-lane bridges are at least 20 inches in diameter and are divided into right and left sections by a vertical line (*Figure 5-3*). The classification for dual-lane traffic is on the left half of the sign with two parallel vertical arrows beneath the number. The classification for single-lane traffic is on the right half of the sign with one vertical arrow beneath the number.

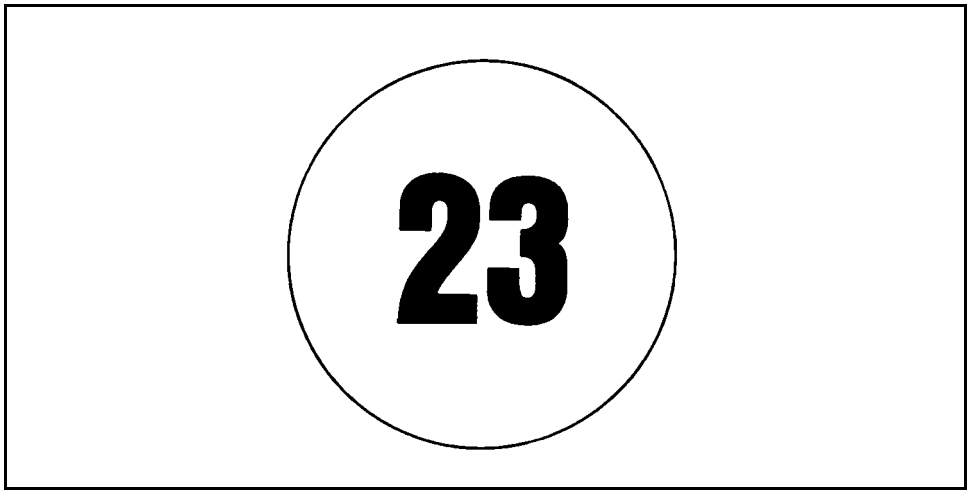

Figure 5-2. Typical Single-Lane, Bridge-Classification Sign

Dual Classification

5-4. A bridge may have a dual classification—wheeled and tracked. A special circular sign indicates both classifications *(Figure 5-4)*. For single-lane bridges, a single sign (20 inches in diameter) is divided into two sections by a horizontal line. The top section shows the wheeled class, and the bottom section shows the tracked class. Symbols representing wheeled and tracked vehicles appear to the left of the corresponding class. For dual-lane bridges, two signs (20 inches in diameter) show the wheeled class on the top and the tracked class on the bottom. As with normal signs, the dual-lane class is on the left and the single-lane class is on the right. Symbols representing wheeled and tracked vehicles appear at the top of the corresponding sign.

5-5. Full NATO bridge signs *(Figure 5-5, page 5-4)* are used to standardize double-flow bridges. The sign has a yellow background with black inscriptions. It is one square meter and contains a circle with a diameter of 20 inches. The right and bottom sides of the circle are 10 inches from the right and bottom

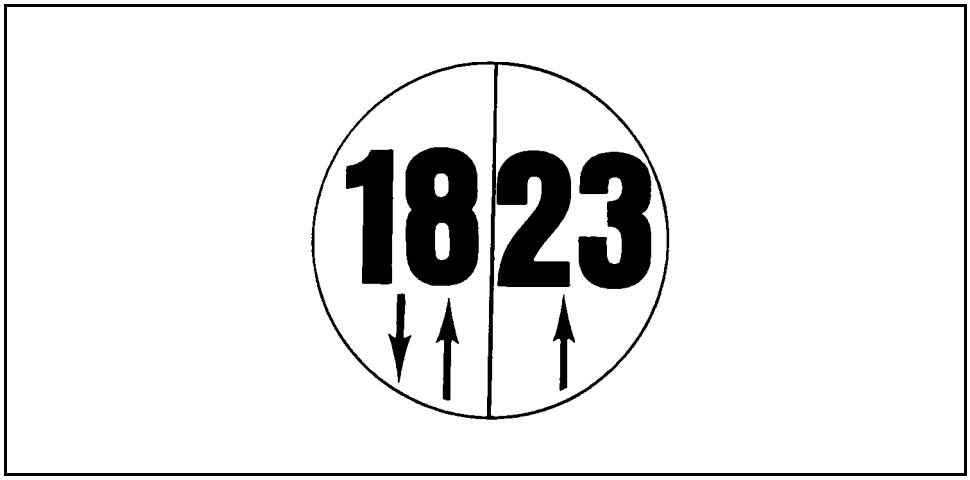

Figure 5-3. Typical Dual-Lane, Bridge-Classification Sign

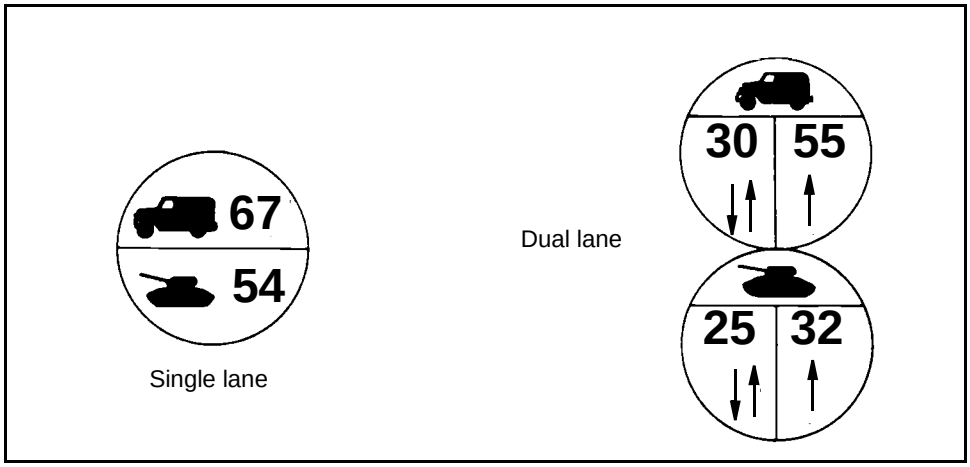

Figure 5-4. Typical Dual-Lane, Bridge-Classification Sign

edges of the square sign. The circle is divided into equal thirds. A small circle is centered in the upper third. The left half of the small circle is shaded and shows the two-way wheeled-vehicle classification. The right half of the small circle is unshaded and shows the one-way wheeled-vehicle classification. A small rectangle is centered in the middle third of the symbol. The left half of it is shaded and shows the two-way tracked-vehicle classification. The one-way tracked-vehicle classification is shown at the right of the unshaded side of the rectangle. The bridge serial number is shown in the lower third of the symbol, the bridge width is placed below the symbol, and the overall bridge length is shown at the right of the symbol.

Temporary

5-6. Temporary signs are posted to show expedient classifications. Post them as indicated in *Chapter 3* and *Appendix B.*

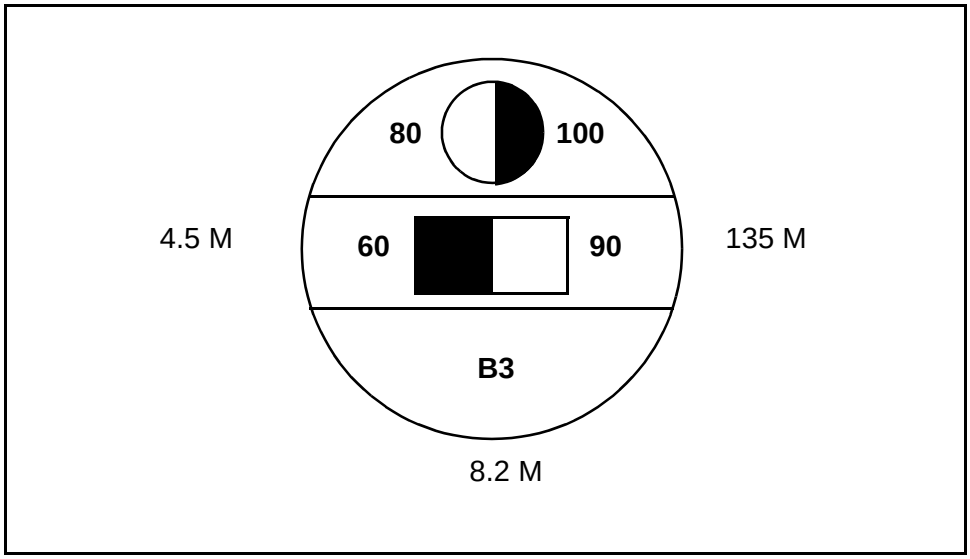

Figure 5-5. Full NATO Bridge Sign

RECTANGULAR-SHAPED SIGNS

5-7. Place rectangular signs (other than those indicating height restrictions) immediately below the circular signs. Rectangular signs show additional instructions and technical information. The signs are a minimum of 5 x 16 inches and have a yellow background with black inscriptions as large as the sign allows. Separate signs show height or width restrictions *(Figure 5-6)*. Height and width signs are not required on bridges where civilian signs clearly show the necessary information. Use international height and width signs in countries that conform to the Geneva Convention of 1949. Restrictions may be in English, metric, or both units of measure. The units of measure used must be clearly indicated on the sign.

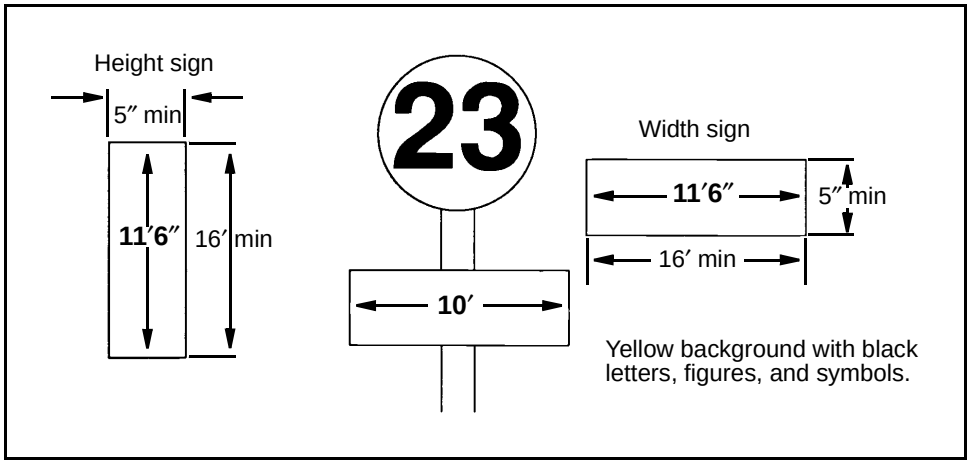

Figure 5-6. Height and Width Signs

MUTILANE SIGNS

5-8. Bridges with three or more lanes must have postings for each lane. Minimum widths for the respective MLC *(Table 3-4, page 3-18)* determine the number of lanes. Heavier loads can often be carried on a restricted lane, such as the center lane of a bridge or the line of rails on a combination road and rail bridge. In such cases, each lane has a bridge-classification sign. Rectangular multilane signs indicate the location and type of traffic allowed to use the restricted lanes (marked by paint, studs, or barricades) *(Figure 5-7)*.

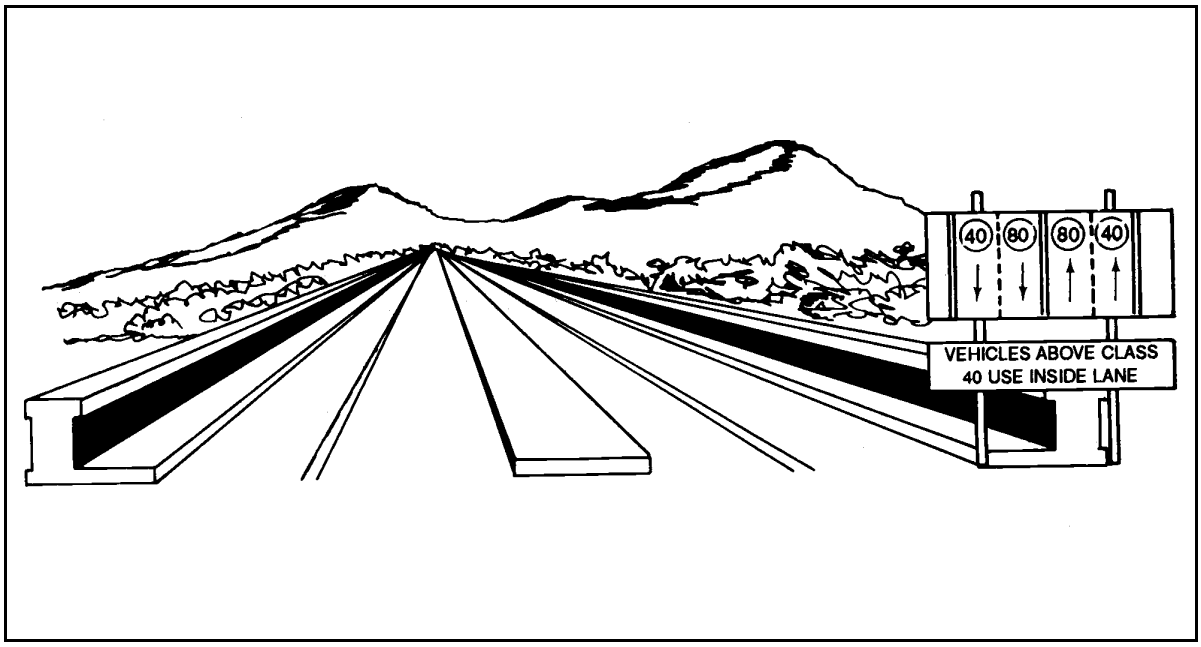

Figure 5-7. Typical Classification and Regulatory Signs for Multilane Bridges

TRAFFIC CONTROLS

5-9. Different types of traffic controls are established for different crossings. The paragraphs below discuss traffic controls for normal and special crossings.

NORMAL CROSSINGS

5-10. Normal crossings are possible when the vehicle's classification number is equal to or less than the bridge's classification number. Normal convoy discipline is imposed with a minimum spacing of 100 feet and a maximum speed of 25 miles per hour (mph).

One Way

5-11. One-way crossings are possible when the vehicle's classification number is equal to or less than the classification number posted on a single-lane bridge. If a one-way crossing on a dual-lane bridge is necessary, oncoming traffic is stopped and the vehicle is driven down the middle of the roadway.

Two Way

5-12. Two-way crossings are possible when the vehicles' classification number is equal to or less than the dual-lane classification number of a multiple-lane bridge. Dual-lane traffic may be in the same or in opposite directions.

SPECIAL CROSSINGS

5-13. Under exceptional conditions, the theater commander may authorize vehicles to cross bridges when the bridge's classification number is less than the vehicle's classification number. These special crossings carry restrictions on vehicle speed and spacing *(Table 5-1)*. Special crossings are limited to caution and risk crossings and are not posted on standard bridge signs.

Caution

5-14. Obtain the caution classifications for nonstandard fixed bridges by multiplying the normal one-way classification number by 125 percent. Obtain caution classifications from published NATO data for standard, prefabricated fixed and floating bridges. *Table 5-1* outlines these restrictions.

NOTE: Consider AFCS bridges as nonstandard for the purposes of special crossings.

Risk

5-15. Obtain risk classifications from the published data for standard, fixed and floating bridges. Risk crossings are not made on nonstandard fixed bridges. These crossings are made only in emergencies when authorized by the responsible commanders. *Table 5-1* outlines restrictions on travel under risk conditions. A qualified engineer officer must inspect the bridge for signs of failure after each risk crossing. Damaged parts must be replaced or repaired before the bridge is reopened.

Table 5-1. Special-Crossing Considerations

Considerations	Type of Crossing		
	Normal	Caution	Risk
Classification	As posted	Standard bridges: as published	Standard bridges: as published
		Nonstandard bridges: 125 percent of normal one-way classification	Nonstandard bridges: no crossing
Spacing	100 feet	150 feet	One vehicle on bridge at a time
Speed	25 mph	8 mph	3 mph
Location	In lane	Bridge centerline	Bridge centerline
Other	None	No stopping, braking, or accelerating	No stopping, braking, or accelerating; inspect the bridge after each crossing

PART THREE

Design

Military, semipermanent, nonstandard fixed highway bridges are designed for a given MLC. Simply supported stringer bridges are recommended since they are easy to design and construct. The materials available and the capabilities of the construction unit must be known before conducting the design process. The design should be economical in materials and construction effort but should not require excessive maintenance.

Chapter 6

Bridge Superstructures

Steel is not always readily available and requires special equipment for its use in construction. However, steel stringers are preferred over timber stringers because of their strength and capability for supporting longer spans. Use steel stringers for TO nonstandard fixed bridges whenever possible. The deck should normally be plank or laminated timber. The wearing surface should be either timber planks or asphalt. Use a concrete deck if concrete is available and a more durable structure is desired.

DESIGN PHASES

6-1. Design is a two-phase process. The first phase involves determining the design loads and their effects in terms of moment and shear forces. The second phase involves selecting members that have sufficient strength to resist the effects of the intended loads on the bridge. Before considering the design process complete, the failure modes (lateral buckling, excessive deflection, end bearing, and so forth) as well as moment and shear must be checked.

DESIGN SEQUENCE

6-2. A logical design sequence is necessary to prevent design omissions and to eliminate unnecessary effort. Select and design members and accessories to prevent any of the five modes of beam failure (excessive vertical deflection, bending, shear, lateral deflection, and bearing).

6-3. The superstructure design sequence is discussed below and includes beam failure as part of the design process. The first nine steps are discussed in this chapter, and *step 10* is discussed in *Chapter 9*.

Step 1. Perform a reconnaissance of the bridge site and determine the bridge's requirements.

Step 2. Determine the number of stringers.

Step 3. Design the deck.

Step 4. Design the stringers.

Step 5. Check the vertical deflection.

Step 6. Design the lateral bracing.

Step 7. Check the dead load.

Step 8. Check the shear forces.

Step 9. Design the end-bearing components.

Step 10. Design the connections.

RECONNAISSANCE

6-4. Perform a reconnaissance of the bridge site as outlined in *Chapter 2*. Before proceeding with the bridge design, determine the—

- Span length of the bridge (in feet).
- Design classification (wheeled, tracked, or both).
- Number of lanes.
- Available construction materials.
- Equipment and personnel required.
- Site constraints.

6-5. After determining the specifications, design the superstructure of the bridge as discussed below. Design the substructure according to the procedures outlined in *Chapter 7*.

NUMBER OF STRINGERS DETERMINATION

6-6. After determining the bridge specifications, estimate the minimum number of stringers required for a given span length. The total number of stringers depends on the moment capacity of an individual stringer, the roadway width, and the center-to-center stringer spacing. The goal is to produce the most economical, safe bridge design using the least number of stringers possible.

6-7. Determine the minimum number of stringers by using the maximum center-to-center stringer spacing and the roadway width *(Figure 6-1)*. Stringer spacing should not exceed 6 feet for timber-deck bridges and 8 feet for concrete-deck bridges. Use *Table 6-1* to determine the number of stringers required according to the bridge classification, the roadway width, and the deck type.

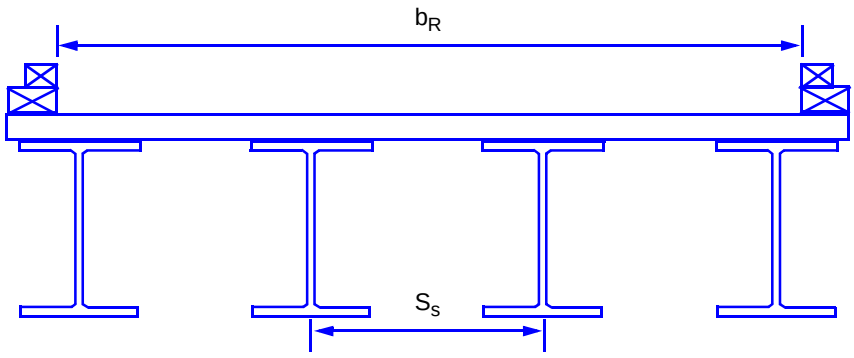

LEGEND:
b_R = roadway width
S_S = center-to-center stringer spacing
(≤6 ft for timber decks and ≤8 ft for concrete decks)

Figure 6-1. Stringer Spacing

Table 6-1. Number of Stringers Required

Bridge Classification	One Traffic Lane			Two or More Traffic Lanes		
	Curb-to-Curb Roadway Width (b_R)	Timber Deck	Concrete Deck	Curb-to-Curb Roadway Width (b_R)	Timber Deck	Concrete Deck
4 to 12	9 ft 0 in	4	4	18 ft	4	4
13 to 30	11 ft 0 in	4	4	18 ft	4	4
31 to 60	13 ft 2 in	4	4	24 ft	5	4
61 to 100	14 ft 9 in	4	4	27 ft	6	5
101 to 150	16 ft 5 in	4	4	32 ft	7	5

6-8. The number of stringers required can also be determined if the roadway width and the desired stringer spacing is known. Compute as follows:

$$N_s = \frac{b_R}{S_s} + 1 \qquad (6\text{-}1)$$

where—

N_S = *total number of stringers, raised to the next higher whole number if a noninteger*
b_R = *curb-to-curb roadway width, in feet*
S_S = *center-to-center stringer spacing, in feet*

6-9. After finding the number of stringers required (by either method), compute the actual stringer spacing as follows:

$$S_s = \frac{b_R}{N_s - 1} \quad (6\text{-}2)$$

where—

S_S = *actual center-to-center stringer spacing, in feet*
b_R = *curb-to-curb roadway width, in feet*
N_S = *total number of stringers, raised to the next higher whole number if a noninteger (equation 6-1)*

DECK DESIGN

6-10. The deck system includes the structural deck, the wearing surface, and the curb and handrail systems. The deck of a stringer bridge supports the vehicles and distributes the load to the stringers. In a deck design (for either timber or concrete decks), the effective span length over which the loads are distributed must be known. Use this measurement to compute the dead load that is supported by the stringers.

6-11. For a deck supported on timber stringers, first compute for the clear distance between the support stringers *(equation 6-3)* and then compute for the effective span length *(equation 6-4)*.

$$L_c = S_s - \frac{t_s}{12} \quad (6\text{-}3)$$

where—

L_c = *clear distance between supporting stringers, in feet*
S_S = *actual center-to-center stringer spacing, in feet (equation 6-2)*
t_S = *thickness of stringer, in inches (Table D-2, pages D-3 and D-4)*

$$S_{eff} = L_c + \frac{t_s}{24} \quad (6\text{-}4)$$

where—

S_{eff} = *effective span length, in feet*
L_c = *clear distance between supporting stringers, in feet (equation 6-3)*
t_S = *thickness of stringer, in inches*

6-12. For timber stringers, a standard stringer nominal width of 4 inches is suggested for initial design calculations. The effective span length should not exceed the distance between the edges of the top flange of the supporting stringers plus the thickness of the deck. If the deck is supported on steel stringers, compute for the distance between the edges of the top flange of the support stringers *(equation 6-5)* and then for the effective span length *(equation 6-6)*.

$$L_e = S_s - \frac{b_f}{12} \quad (6\text{-}5)$$

where—

L_e = *distance between edges of top flange of supporting stringers, in feet*
S_S = *actual center-to-center stringer spacing, in feet (equation 6-2)*
b_f = *stringer-flange width, in inches*

$$S_{eff} = L_e + \frac{b_f}{24} \quad (6\text{-}6)$$

where—

S_{eff} = *effective span length, in feet*
L_e = *distance between edges of top flange of supporting stringers, in feet (equation 6-5)*
b_f = *stringer-flange width, in inches*

6-13. For steel stringers, assume an initial flange width of 12 inches for the deck computations. The effective span length should not exceed the distance between the edges of the top flange of the supporting stringers plus the thickness of the deck.

Timber Deck

6-14. Timber decks are constructed with the long dimension of the planks placed either horizontally (flat) (plank deck) or vertically (on edge) (laminated deck). The vertically oriented planks of a laminated deck are nailed to each other. *Figure 6-2* shows a sketch of both timber-deck orientations. Install a wearing surface to prevent wear. On timber-deck bridges, the wearing surface should consist of a 2- or 3-inch-thick timber treadway. On one-lane bridges, the treadway should be limited to the path of the wheels or tracks. On two-lane bridges, the treadway should fully cover the deck. Place the treadway between the curbs rather than under the curbs.

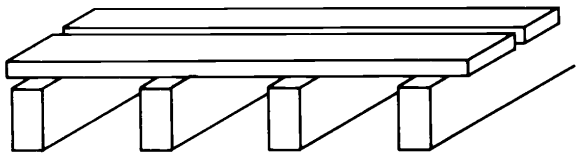

Plank decking

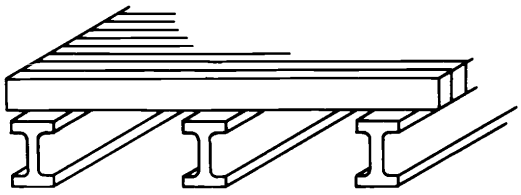

Laminated decking

Figure 6-2. Timber-Deck Orientations

Plank Deck

6-15. A plank deck is the simplest to design and construct. It consists of a series of sawn lumber planks placed flatwise across supporting beams. Each plank is normally 10 or 12 inches wide and 4 inches thick. Plank decks are used primarily on low-volume or special-use roads. They are not suitable for asphalt pavement because of large live-load deflections and movements from moisture changes in the planks.

6-16. Determine the required deck thickness by using *Figure 6-3*. Plot the effective span length *(equation 6-4)* and the desired MLC. The minimum deck thickness is 3 inches. Use a laminated deck when the required deck thickness exceeds 6 inches. Use deck planks made from dimensioned lumber having a thickness equal to or greater than the required deck thickness. If the available deck material is not thick enough, layer planks until achieving the required thickness plus 2 inches. The extra 2 inches will compensate for the structural inefficiencies of layered planks.

6-17. Normally, install the decking in a perpendicular direction to the bridge's centerline for ease and speed of construction. Install the decking with a 1/4-inch space between the planks for expansion, better drainage, and air circulation.

Laminated Deck

6-18. Large stringer spacing and high design classifications usually require a thicker decking (laminated decks are more economical in this case). Although layering strengthens the plank decks, laminated decks are much stiffer.

6-19. **Required Deck Thickness.** Loads are spread out more effectively in a laminated deck than in a conventional plank deck. Lamination has the effect of shortening the effective deck span between stringers by about 25 percent. To design a laminated deck—

- Adjust the effective span length *(equation 6-6)* by multiplying its value by a factor equal to 0.75. This value will now become the adjusted effective span length.
- Determine the required deck thickness of the laminated deck from *Figure 6-3* (assuming that it equals that for a plank deck). Use the adjusted effective span length and the MLC. The minimum deck thickness required is 3 inches.

6-20. **Lamination.** The performance of live-load deflections depends on the effectiveness of the nails in transferring loads between adjacent boards. To create a laminated deck, place the planks vertically. Make sure that the deck is well-nailed or -glued to the adjacent board over the full length. Nails should be placed at a minimum of 1 1/2 inches on center along the length of the boards. The nail pattern should be staggered to prevent splitting of the lumber.

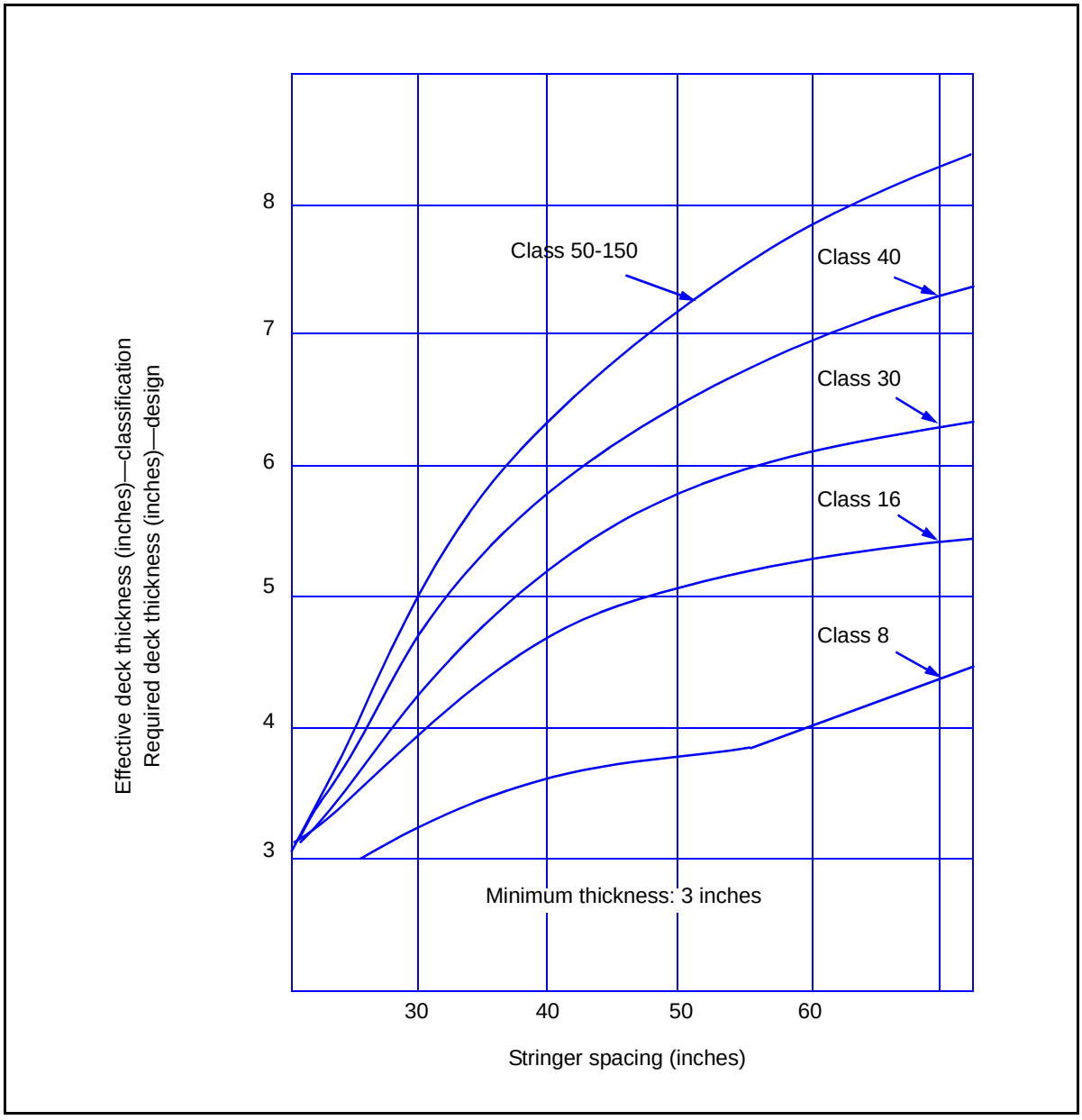

Figure 6-3. Required and Effective Deck Thicknesses (Timber Deck)

Reinforced Concrete Deck

6-21. To build a more permanent structure, use a concrete deck *(Figure 6-4, page 6-8)*. Reinforced concrete decks can span greater distances than timber decks. Concrete decks use fewer stringers, which can be spaced up to 8 feet apart. The construction process is more difficult because of the required formwork, procuring and setting of steel, placing of concrete, and curing. However, if material and time are available, use concrete decking for a stronger flooring system.

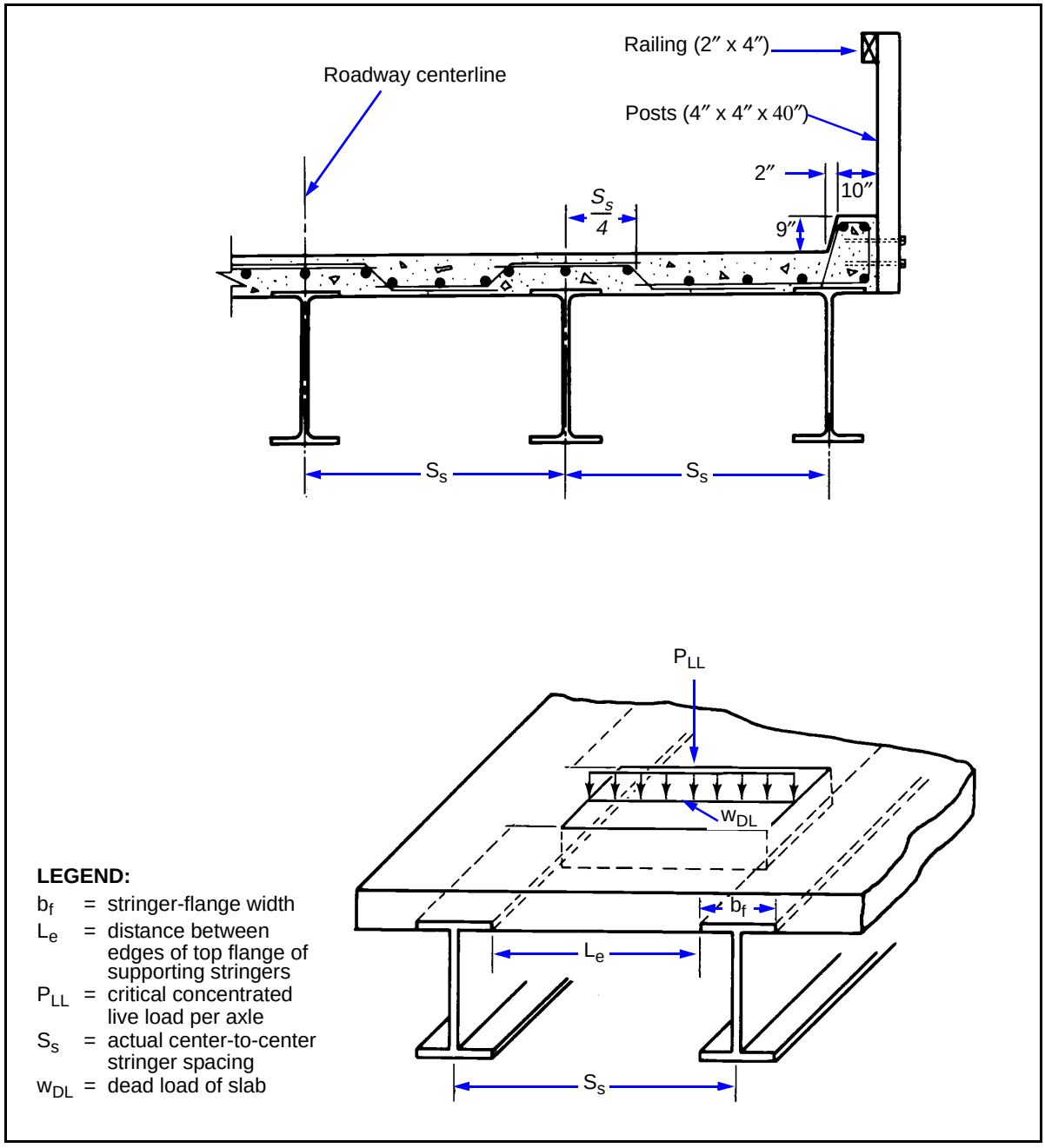

Figure 6-4. Cross Section of a Steel-Stringer Bridge With a Concrete Deck

6-22. **Concrete Compressive Strength.** In the US, the design strength of concrete corresponds to the compressive strength (in psi) of test cylinders that are 6 inches in diameter and 12 inches high and are measured on the 28th day after they are placed. *Table 6-2* lists various concrete compressive strengths used in structural design. In most situations, use a compressive strength equal to 3,000 psi for design purposes unless what will be available from the concrete source is known.

Table 6-2. Compressive Strength of Concrete

Concrete Type	f'c (in psi)
Nonprestressed	3,000 to 4,000
Prestressed	5,000 to 6,000
Special situations	6,000 to 12,000
High strength	10,000 to 15,000

6-23. **Reinforcing Steel Yield Strength.** Steel reinforcement may consist of bars, welded-wire fabric, or wires. In the US, reinforcing bars are available in sizes of 3/8 to 2 1/4 inches nominal diameter. *Table 6-3* lists various steel yield strengths for reinforcing steel used in structural design.

Table 6-3. Yield Strength of Reinforcing Steel

ASTM Designation	Grade	Bar Size No.	fy (in psi)
A615-94 (billet steel)	40	3 to 6	40,000
	60	3 to 18	60,000
A616-93 (rail steel)	50	3 to 11	50,000
	60	3 to 11	60,000
A617-93 (axle steel)	40	3 to 11	40,000
	60	3 to 11	60,000
A706-81 (low-alloy steel)	—	3 to 18	60,000

6-24. **Slab Dimensions.** Design a concrete deck as a one-way slab (continuous at both ends) with a design span equal to the effective span length *(equation 6-6)*. In designing a one-way slab, consider, for example, a typical 12-inch-wide strip. The continuous slab may be designed as a continuous beam having a known width of 12 inches; the slab thickness is now the only unknown. For design calculations, assume a slab thickness equal to 7 inches.

6-25. **Wearing Surface.** If desired, use a wearing surface such as asphalt. If asphalt is used, the wearing-surface thickness should be 1 1/2 inches.

6-26. **Dead Load.** Compute the dead-load weight of the slab by considering its own weight and any wearing surface for a 12-inch-wide strip. Compute the slab's dead-load weight and dead-load bending moment as follows:

$$w_{DL} = 1.4\left(\frac{t_s U_c + t_w U_w}{12{,}000}\right) \qquad (6\text{-}7)$$

where—

w_{DL} = *dead load of slab, in kpf of width*
t_S = *slab thickness, in inches (paragraph 6-24)*

U_c = *unit weight for concrete, in pounds per cubic foot (Table 6-4)*
t_w = *wearing-surface thickness, in inches (paragraph 6-25)*
U_w = *unit weight for wearing-surface material, in pounds per cubic foot (Table 6-4)*

$$M_{DL} = \frac{w_{DL} S_{eff}^{2}}{10} \quad (6\text{-}8)$$

where—

M_{DL} = *dead-load bending moment of the slab, in kip-feet per foot of width*
w_{DL} = *dead load of slab, in kip-feet per foot of width (equation 6-7)*
S_{eff} = *effective span length, in feet (equation 6-4)*

Table 6-4. Unit Weights for a Dead-Load Computation

Material	Unit Weight (lb/ft^3)
Steel or cast steel	490
Cast iron	450
Aluminum alloys	175
Timber (treated or untreated)	50
Concrete (plain or reinforced)	150
Compacted sand, earth, gravel, or ballast	120
Loose sand, earth, or gravel	100
Macadam or gravel (rolled)	140
Cinder filling	60
Asphalt pavement	150
Railway rails, guard rails, and fastenings (per linear foot of track)	200
Stone masonry	170

6-27. **Live Load.** Determine the live-load bending moment acting on a 12-inch-wide strip of slab with reinforcement perpendicular to the traffic. The live load is that for the desired wheeled vehicle *(Appendix B)* with the tire load positioned so that it produces the most critical loading between the stringers.

6-28. Compute the critical, concentrated live load per wheel used for design and the live-load moment for the slabs as follows:

$$P_{LL} = P_{max} \quad (6\text{-}9)$$

where—

P_{LL} = *critical concentrated live load per wheel, in kips*
P_{max} = *maximum single-axle load, in tons (Table B-1, pages B-2 through B-5, Column 4)*

and—

$$M_{LL} = 1.564\left(\frac{S_{eff} + 2}{32}\right)P_{LL} \quad (6\text{-}10)$$

where—

M_{LL} = *live-load bending moment of slab, in kip-feet per foot of width*
S_{eff} = *effective span length, in feet (equation 6-4)*
P_{LL} = *critical concentrated live load per axle, in kips (equation 6-9)*

6-29. **Required Nominal Strength.** Compute the required nominal strength as follows:

$$m = \frac{M_{DL} + M_{LL}}{0.9} \quad (6\text{-}11)$$

where—

m = *required nominal strength, in kip-feet per foot of width*
M_{DL} = *dead-load bending moment of the slab, in kip-feet per foot of width (equation 6-8)*
M_{LL} = *live-load bending moment of slab, in kip-feet per foot of width (equation 6-10)*

6-30. **Reinforcing Steel Ratio.** For a concrete compressive strength of 3,000 psi, use 0.85 for the B-factor to find the maximum reinforcement ratio in *Table 6-5*. Use the concrete compressive strength ($f'c$) and the B-factor to find the reinforcing steel ratio from *Table 6-5*.

Table 6-5. Reinforcing Steel Ratio (R_S)

Yield Strength (f_y)	f'c = 3,000 psi B = 0.85	f'c = 3,500 psi B = 0.85	f'c = 4,000 psi B = 0.85	f'c = 5,000 psi B = 0.80	f'c = 6,000 psi B = 0.75
40,000 psi	0.0139	0.0163	0.0186	0.0219	0.0246
50,000 psi	0.0103	0.0121	0.0138	0.0162	0.0182
60,000 psi	0.0080	0.0094	0.0107	0.0126	0.0142
Note: $R_S = 0.375R_{bs}$					

6-31. **Strength Coefficient of Resistance.** Compute the strength coefficient of resistance as follows:

$$R_n = R_s f_y - \left(\frac{R_s^2 f_y^2}{1.7f'c}\right) \quad (6\text{-}12)$$

where—

R_n = *strength coefficient of resistance, in psi*
R_S = *selected reinforcing steel ratio for design (Table 6-5)*
f_y = *yield strength of reinforcing steel, in psi (Table 6-3, page 6-9)*
f'_c = *compressive strength of concrete, in psi (Table 6-2, page 6-9)*

6-32. **Effective Depth.** Assuming that number (No.) 6 steel bars are used (nominal diameter of the bar equals 3/4 inch plus an additional 3/4 inch for protective concrete cover) and that the bars will fit in one layer, compute the required overall depth as follows:

$$req\ h = \sqrt{\frac{1{,}000m}{R_n}} + 1.125 \qquad (6\text{-}13)$$

where—

req h = required overall depth, in inches
m = required nominal strength, in kip-feet per foot of width (equation 6-11)
R_n = strength coefficient of resistance, in psi (equation 6-12)

6-33. Increase the required overall depth by about 1/2 inch (or by an amount that will round the required overall depth to the next complete inch or half-inch, whichever is closest). This will become the final thickness of the concrete deck. Compute the effective depth as follows:

$$d' = \sqrt{\frac{1{,}000m}{R_n}} + 0.5 \qquad (6\text{-}14)$$

where—

d' = effective depth, in inches
m = required nominal strength, in kip-feet per foot of width (equation 6-11)
R_n = strength coefficient of resistance, in psi (equation 6-12)

6-34. **Revised Reinforcing Steel Ratio.** Compute the required area of tension steel to be placed in the transverse direction of the slab. Compute the revised value of the reinforcing steel ratio and the required steel area as follows:

$$R_s = \frac{0.85f'c}{f_y}\left[1 - \sqrt{1 - \frac{2{,}350m}{f'c(d')^2}}\right] \qquad (6\text{-}15)$$

where—

R_S = revised reinforcing steel ratio
f'_c = compressive strength of concrete, in psi (Table 6-2, page 6-9)
f_y = yield strength of reinforcing steel, in psi (Table 6-3, page 6-9)
m = required nominal strength, in kip-feet (equation 6-11)
d' = effective depth, in inches (equation 6-14)

and—

$$A_{st} = 12R_s d' \qquad (6\text{-}16)$$

where—

A_{st} = required area of tension steel, in square inches
R_S = revised reinforcement ratio (equation 6-15)
d' = effective depth, in inches (equation 6-14)

6-35. **Bar Selection and Placement.** Select the actual number of bars that will meet the tension steel area *(equation 6-16)* using *Table 6-6*. Use at least two bars wherever flexural reinforcement is required. Do not use more than two bar sizes at a given location in the span. The selected bars should not be more than two standard sizes apart (for example, No. 7 and No. 9 bars may be acceptable, but No. 4 and No. 9 would not).

Table 6-6. Total Areas for Various Numbers of Reinforcing Bars

Bar-Size No.	Nominal Diameter (in)	Weight (lb/ft)	Number of Bars									
			1	2	3	4	5	6	7	8	9	10
3	0.375	0.376	0.11	0.22	0.33	0.44	0.55	0.66	0.77	0.88	0.99	1.10
4	0.500	0.668	0.20	0.40	0.60	0.80	1.00	1.20	1.40	1.60	1.80	2.00
5	0.625	1.043	0.31	0.62	0.93	1.24	1.55	1.86	2.17	2.48	2.79	3.10
6	0.750	1.502	0.44	0.88	1.32	1.76	2.20	2.64	3.08	3.52	3.96	4.40
7	0.875	2.044	0.60	1.20	1.80	2.40	3.00	3.60	4.20	4.80	5.40	6.00
8	1.000	2.670	0.79	1.58	2.37	3.16	3.95	4.74	5.53	6.32	7.11	7.90
9	1.128	3.400	1.00	2.00	3.00	4.00	5.00	6.00	7.00	8.00	9.00	10.00
10	1.270	4.303	1.27	2.54	3.81	5.08	6.35	7.62	8.89	10.16	11.43	12.70
11	1.410	5.313	1.56	3.12	4.68	6.24	7.80	9.36	10.92	12.48	14.04	15.60

6-36. Locate the bars symmetrically about the vertical axis of the beam section (in one layer if practical). Select a bar size so that no less than two and no more than five or six bars are put in one layer. When using several layers of different bar sizes, place the largest bars in the layer nearest to the face of the beam. When placing bars within the beam's width, follow these guidelines for determining the minimum clear spacing required between the bars that will allow for proper concrete placement around them:

- For one layer of bars, the minimum clear spacing is 1 inch or the nominal diameter of the larger bar *(Table 6-6)*, whichever is greater.
- For two or more layers of bars, the minimum clear spacing is equal to or greater than 1 inch.

6-37. Ensure that the bar spacing obtained with *equation 6-16* is greater than the minimum clear spacing obtained previously with *equation 6-15*. Compute the actual spacing between the bars as follows:

$$\textit{bar spacing (in)} = \frac{10.5 - (\textit{number of bars} \times d_b)}{\textit{total number of bars} - 1} \qquad (6\text{-}17)$$

where—

number of bars = *number of reinforcing bars selected from Table 6-6 that will accommodate the total area of steel (equation 6-16)*

d_b = *nominal diameter of the bar, in inches (Table 6-6)*

total number of bars = *total number of bars to be accommodated within the beam's width*

6-38. **Design Check.** Compute the depth of the equivalent rectangular stress block *(equation 6-18)* and then the design strength of the section *(equation 6-19)*. First compute—

$$d_o = \frac{A_{st} f_y}{10.2 f'c} \quad (6\text{-}18)$$

where—

d_o = *depth of the equivalent rectangular stress block, in inches*
A_{st} = *required area of tension steel, in square inches (equation 6-16)*
f_y = *yield strength of reinforcing steel, in psi (Table 6-3, page 6-9)*
f'_c = *compressive strength of concrete, in psi (Table 6-2, page 6-9)*

then compute—

$$m' = \left[A_{st} f_y \left(d' - \frac{d_o}{2}\right)\right] \frac{1}{12{,}000} \quad (6\text{-}19)$$

where—

m' = *design strength of the section, in kip-feet*
A_{st} = *required area of tension steel, in square inches (equation 6-16)*
f_y = *yield strength of reinforcing steel, in psi (Table 6-3)*
d' = *effective depth, in inches (equation 6-14)*
d_o = *depth of the equivalent rectangular stress block, in inches (equation 6-18)*

6-39. The section is acceptable in flexure if m' from *equation 6-19* is greater than or equal to m from *equation 6-11*. If the condition is not satisfied, go back to *equation 6-14* and increase the effective depth of slab slightly and redo all the necessary calculations until the condition is satisfied.

6-40. **Temperature and Shrinkage.** Reinforcing bars (parallel to traffic) are required in the top of the slab. Use the following guidelines for computing the minimum temperature reinforcement ratio (denoted by R_{temp}):

- The R_{temp} is 0.0020 when using grade 40 or 50 bars for the slabs.
- The R_{temp} is 0.0018 when using grade 60 bars for the slabs.

6-41. Compute the area of temperature and shrinkage steel as follows:

$$A_{temp} = 12 R_{temp} d' \quad (6\text{-}20)$$

where—

A_{temp} = *area of temperature and shrinkage steel, in square inches*
d' = *effective depth, in inches (equation 6-14)*
R_{temp} = *minimum temperature reinforcement ratio*

Place the temperature reinforcement bars at a minimum spacing equal to three times the slab thickness. Do not exceed a spacing of 18 inches.

6-42. **Shear Check.** Because of practical space limitations, shear reinforcement is not used in a slab. Slabs designed for bending moment should be considered satisfactory in shear.

Curbs and Handrails

6-43. A *curb system* guides traffic on the bridge. For timber-deck bridges, place 6- x 6-inch timbers on 5-foot centers on the curb risers. Risers of 6- x 12- x 30-inch material provide an adequate curb system. Rigidly attach the curbs to the decking. *Figure 6-5* shows the minimum specifications for a curb system on timber-deck bridges. The curb system will not withstand the impact of a heavy vehicle that is out of control. To design such a system would require a curb system of excessive size and cost. For concrete-deck bridges, form the curb as a part of the deck. Pour the curb at the same time as the main deck. Provide drain holes in the curb at 10-foot intervals on both sides of the bridge.

6-44. Include a *handrail system* if necessary. Place handrails on bridges with heavy foot traffic and where the danger of falling exists. If handrails are not used, mark the bridge edges. One marking method is to place 2- x 4-inch posts with reflectors at 10-foot intervals along both sides of the bridge. *Figure 6-5* shows the minimum specifications for handrails on timber-deck bridges.

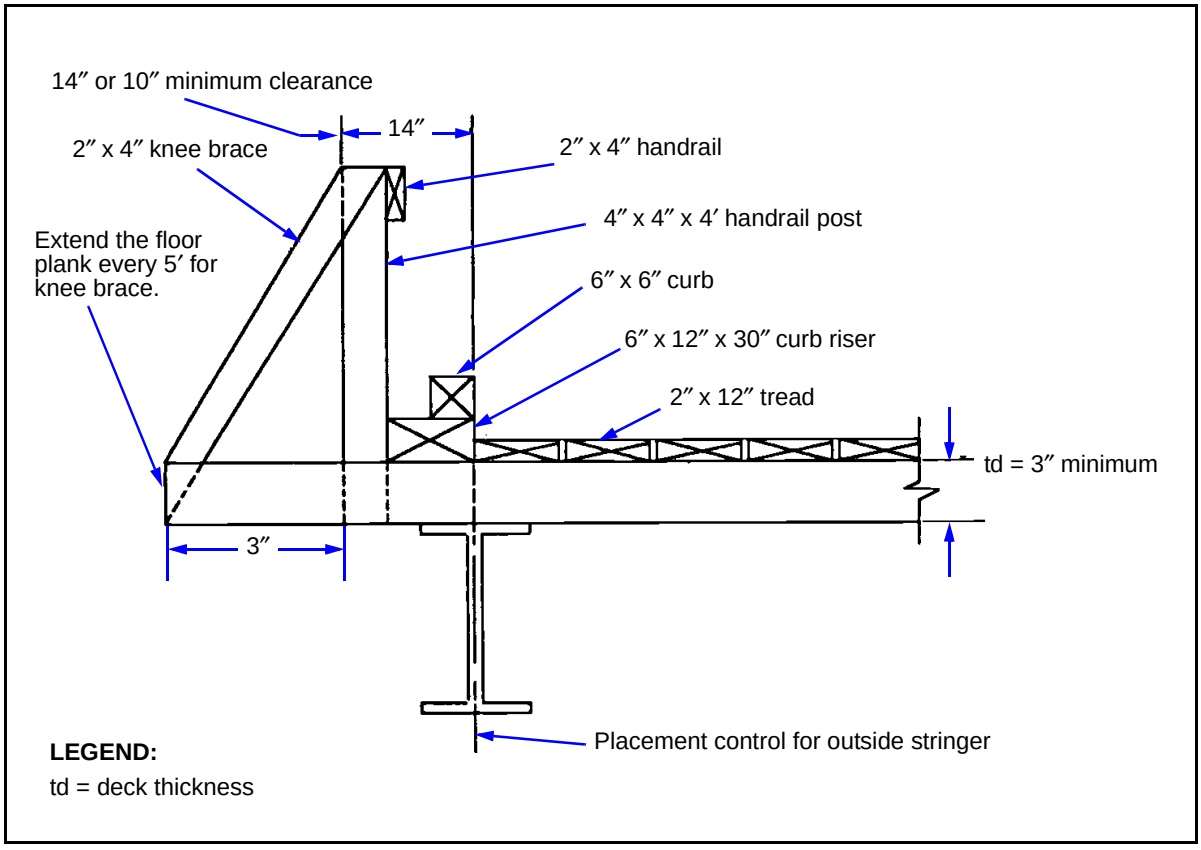

Figure 6-5. Curb and Handrail Systems for Timber-Deck Bridges

STRINGER DESIGN

6-45. Stringer design involves computing the dead-load weight, the live-load moment, and the total design moment. Various factors must be considered in the stringer selection (timber or steel).

Dead Load

6-46. The dead load includes the weight of all the parts of a structure, including the deck and accessories (railings, curbs, lateral bracing, and connections) as well as the stringers. Since the stringers are not yet sized, their weight must be estimated. The dead load is considered to be uniformly distributed along the span and equally shared by each stringer.

6-47. For the initial design calculations on a timber-deck bridge, assume a dead-load weight of 0.1 kpf for any accessories and a weight equal to 0.2 kpf per stringer. For a concrete-deck bridge, assume a dead-load weight of 0.4 kpf for any accessories (includes curbs and handrails) and a weight equal to 0.3 kpf per stringer. Compute the dead-load weight of the deck *(equation 6-21)* and the estimated design dead load *(equation 6-22)*. First compute:

$$w_{DL} = \left(\frac{b_s U_m t_s}{12{,}000}\right) + \left(\frac{b_R U_w t_w}{12{,}000}\right) \quad (6\text{-}21)$$

where—

w_{DL} = *dead-load weight of the deck, in kpf*
b_S = *deck width in the transverse direction, in feet*
U_m = *unit weight of the material, in pounds per cubic foot (Table 6-4, page 6-10)*
t_S = *timber deck or concrete-slab thickness, in inches*
b_R = *curb-to-curb width, in feet*
U_w = *unit weight for wearing-surface material, in pounds per cubic foot (Table 6-4)*
t_w = *wearing-surface thickness, in inches*

then compute—

$$W_{DL} = w_{DL} + w_{acc} + w_s N_s \quad (6\text{-}22)$$

where—

W_{DL} = *estimated design dead load of the span, in kpf*
w_{DL} = *dead-load weight of the deck, in kpf (equation 6-21)*
w_{acc} = *assumed dead-load weight of the accessories, in kpf*
w_S = *assumed dead-load weight per stringer, in kpf (paragraph 6-47)*
N_S = *total number of stringers (equation 6-1)*

6-48. Assume that the dead load of the bridge is equally shared by all of the stringers. Compute the design dead-load moment per stringer as follows:

$$m'_{DL} = \frac{W_{DL} L^2}{8 N_s} \quad (6\text{-}23)$$

where—

m'_{DL} = *design dead-load moment per stringer, in kip-feet*
W_{DL} = *estimated design dead load of the span, in kpf (equation 6-22)*
L = *design span length, in feet*
N_S = *total number of stringers (equation 6-1)*

Live Load

6-49. Vehicle loads are assumed to be the only live load acting on the bridge. Find the design values for the live load by using the moment and shear curves in *Appendix B*. Use the larger value of wheeled and tracked moment and both values of wheeled and tracked shear for further calculations. If the bridge is for civilian traffic, use the provisions in *Chapter 3, Section III*, and *Figure 3-1, page 3-4*, to determine the equivalent MLC of the civilian traffic for design calculations.

6-50. NATO traffic restrictions apply for design purposes, which is 25 mph and 100-foot spacing. Because of this long spacing, usually only one vehicle will be on any single span of a bridge at a time. If significant pedestrian traffic is expected (refugees and dismounted military units), treat these as line loads of 75 pounds per foot, each over a 1-foot width. Post these line loads in all locations that lines of people might be expected.

6-51. Determine the total live-load moment according to the design vehicle class *(Table B-2, pages B-6* through *B-9)*. Compute the live-load moment that a stringer must resist (including impact effects) as follows:

$$m'_{LL} = \frac{1.15M'_{LL}}{N_{1,2}} \qquad (6\text{-}24)$$

where—

m'_{LL} = *design live-load moment per stringer, in kip-feet*

M'_{LL} = *total design live-load moment according to vehicle class, in kip-feet (Table B-2)*

$N_{1,2}$ = *effective number of stringers (Table 3-3, page 3-14)*

Total Design Moment per Stringer

6-52. The total design moment that each stringer resists is the summation of the dead- and live-load moments per stringer. Compute as follows:

$$M = m'_{DL} + m'_{LL} \qquad (6\text{-}25)$$

where—

M = *total design moment per stringer, in kip-feet*

m'_{DL} = *design dead-load moment per stringer, in kip-feet (equation 6-23)*

m'_{LL} = *design live-load moment per stringer, in kip-feet (equation 6-24)*

Timber-Stringer Selection

6-53. If the species and grade of timber is known, use the allowable stresses from *Table C-1, pages C-3* through *C-6*, for the design. Convert these values from psi to ksi by dividing the tabulated stress by 1,000. Generally, the tabulated values assume that the material will be in continuously dry conditions. However, timber decking and stringers may retain moisture on their horizontal surfaces; therefore, consider its use under wet conditions.

6-54. Apply some modification factors (see the notes in *Table C-1, pages C-3* through *C-6,* toward the tabulated allowable bending stress to account for various effects (lumber thickness/width ratios, edgewise or flatwise use, repetitive member use, and moisture content). For military loads, apply an additional factor equal to 1.33 to account for lower traffic volume (see *Appendix I*). Whenever the species and grade of solid-sawn timber cannot be determined, assume an allowable bending stress equal to 1.75 ksi and an allowable horizontal-shear stress equal to 0.095 ksi. For glue-laminated timber, assume an allowable bending stress equal to 2.16 ksi and an allowable horizontal-shear stress equal to 0.2 ksi. These values must be adjusted for the various applicable conditions stated in the notes of *Table C-1*. The modification for lower traffic volume has already been considered in those assumed values.

Steel-Stringer Selection

6-55. The allowable bending stress for steel members is 0.75 times the steel yield strength *(Table 6-7),* assuming that the stringers are braced properly *(paragraph 6-59).* The allowable shear stress for steel members is 0.45 times the steel yield strength.

Table 6-7. Steel Yield Strength

Type	Structural Steel	High-Strength, Low-Alloy Steel		Quenched and Tempered, Low-Alloy Steel	High Yield Strength, Quenched and Tempered, Alloy Steel	
AASHTO designation	M 270 (Grade 36)	M 270 (Grade 50)	M 270 (Grade 50)	M 270 (Grade 70W)	M 270 (Grades 100/100W)	
ASTM designation	A 709 (Grade 36)	A 709 (Grade 50)	A 709 (Grade 50W)	A 709 (Grade 70W)	A 709 (Grade 100/100W)	
Plate thickness	Up to 4 in	Up to 4 in	Up to 4 in	Up to 4 in	$\leq$ 2 1/2 in	$>$ 2 1/2 to $\leq$ 4 in
F_y (ksi)	36	50	50	70	100	90

Required Section Modulus

6-56. Once the total moment each stringer must resist is known, compute the section modulus a stringer requires for a given allowable bending stress as follows:

$$S_{req} = \frac{12M}{F_b} \qquad (6\text{-}26)$$

where—

S_{req} = *required section modulus, in cubic inches*

M = *total design moment per stringer, in kip-feet (equation 6-25)*

F_b = *allowable bending stress, in ksi (paragraph 6-53 for timber and paragraph 6-55 for steel)*

6-57. Select a stringer *(Table C-2, page C-7,* for timber and *Table D-2, pages D-3* and *D-4,* for steel*)* with a section modulus greater than or equal to the required section modulus from *equation 6-26.* The available stringer sizes may not be large enough to provide sufficient section modulus. If this happens, add a stringer to the bridge section and recompute *(equation 6-23).* Compute the total design moment per stringer *(equation 6-25)* and the required section modulus *(equation 6-26)* until a suitable steel stringer size (as listed in *Appendix D)* is obtained.

VERTICAL-DEFLECTION CHECK

6-58. Compute the vertical deflection of the stringers due to the live load (including impact) as shown below. The deflection should not be greater than $d_{max} = (L/200) \times 12$ (in inches).

$$d_{LL} = \frac{331 M'_{LL} L^2}{N_{1,2} E S d_s} \qquad (6\text{-}27)$$

where—

d_{LL} = *deflection due to the live load plus impact, in inches*
M'_{LL} = *total design live-load moment according to vehicle class, in kip-feet (Table B-2, pages B-6 through B-9)*
L = *design span length, in feet*
$N_{1,2}$ = *effective number of stringers from Table 3-3, page 3-14*
E = *modulus of elasticity, in ksi (Appendix C for timber and Appendix D for steel)*
S = *section modulus of the selected stringer, in cubic inches*
d_S = *depth of the stringer, in inches*

LATERAL-BRACING DESIGN

6-59. When a beam is loaded and deflected downward, the upper portion of the beam shortens and the lower portion of the beam lengthens. This reshaping results from the internal moments induced by the loading. The beam will experience compressive forces in the upper portion and tensile forces in the lower portion of the section. The upper portion of the member tends to compress or buckle, just as a column does with respect to its weaker axis. The buckling effect is always accompanied by some lateral twisting. This action is called lateral buckling. *Figure 6-6, page 6-20,* shows the lateral-buckling effect in a beam (timber or steel).

6-60. To prevent lateral buckling in a beam, use cross frames or diaphragms and bracing systems for lateral support. One of the primary factors affecting lateral-beam stability is the distance between the points of a lateral support along the beam's length (the unsupported or unbraced length).

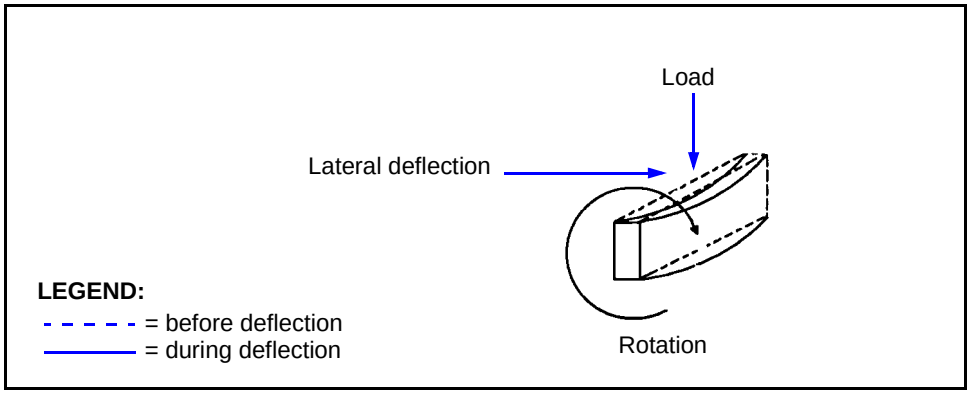

Figure 6-6. Lateral Buckling

Timber Stringers

6-61. For timber beams, provide lateral support by locating transverse bracing at the beam's end supports and at every one-third point along the beam span *(Figure 6-7)*. This distance (spacing) between the lateral braces along the length of the beam is the unbraced length. For simple-span beams and any loading condition, compute the effective beam length and then the beam slenderness factor as follows:

$$If\ \frac{12L_u}{d_s}\ is \geq 14.3, use\ L_e = 22.1L_u \qquad (6\text{-}28)$$

or—

$$If\ \frac{12L_u}{d_s}\ is < 14.3, use\ L_e = 19.6L_u + 3d_s \qquad (6\text{-}29)$$

where—

L_u = *unbraced length, in inches*
d_S = *depth of the timber stringer, in inches*
L_e = *effective beam length, in inches*

$$C_s = \sqrt{\frac{L_e d_s}{b_s^2}} \leq 50 \qquad (6\text{-}30)$$

where—

C_S = *slenderness factor (nondimensional)*
L_e = *effective beam length, in inches (equation 6-28 or 6-29)*
d_S = *depth of the timber beam, in inches*
b_S = *stringer width, in inches*

6-62. If the result of *equation 6-30* is not ≤50, increase the number of braces along the beam's span to reduce the unsupported length and then recompute. When the unbraced length varies substantially along the beam's span, check the slenderness factor for each unsupported length. Typically, the slenderness

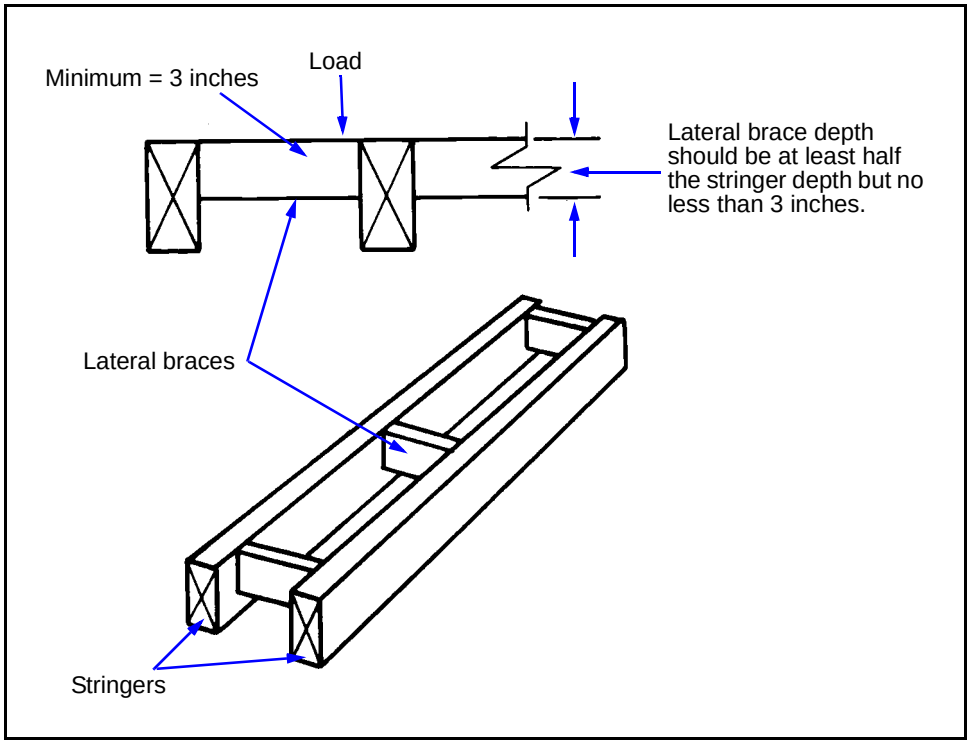

Figure 6-7. Lateral Bracing for Timber Stringers

factor at the center portion of the beam (where bending stress is higher) will control the lateral-bracing design.

Steel Stringers

6-63. A steel beam should be braced laterally, perpendicular to the plane of the web. Lateral bracing provides adequate lateral stability of the compression flange so that the beam section can develop its maximum design bending strength.

6-64. **Maximum Allowable Unbraced Length.** Establish the maximum allowable unbraced length for a steel stringer by using the smaller of the values obtained from the following equations:

$$L_c = \frac{6.33 b_f}{\sqrt{F_y}} \qquad (6\text{-}31)$$

or—

$$L_c = \frac{1{,}667}{\left(\frac{d_s}{A_f}\right) F_y} \qquad (6\text{-}32)$$

where—

L_c = *maximum allowable unbraced length for a steel stringer, in feet*
b_f = *flange width of the steel section, in inches (Appendix D)*

F_y = *yield strength of steel, in ksi (Table 6-7, page 6-18)*
d_S = *depth of the steel section, in inches (Appendix D)*
A_f = *area of the compression flange, in square inches (Appendix D)*

6-65. **Number of Braces.** The number of lateral braces needed will depend on the length of the beam's span and the maximum unbraced length for a given steel section. Compute for the number of lateral braces needed as follows:

$$N_b = \frac{L}{L_c} + 1 \qquad (6\text{-}33)$$

where—

N_b = *number of lateral braces (rounded to the next higher whole number)*
L = *design span length, in feet*
L_c = *maximum allowable unbraced length for a steel stringer, in feet (the smaller of the value's from equations 6-31 and 6-32)*

6-66. **Spacing of Lateral-Bracing.** Distribute the number of lateral braces by spacing them along the beam span at the distance computed below. Locate a lateral brace at each end support and the remaining braces along the beam's length.

$$L_u = \frac{L}{N_b - 1} \qquad (6\text{-}34)$$

where—

L_u = *spacing of lateral bracing , in feet*
L = *design span length, in feet*
N_b = *number of lateral braces (rounded to the next higher whole number) (equation 6-33)*

6-67. **Bracing-System Selection.** The type of lateral bracing depends on the availability of materials. Diaphragms or cross frames are satisfactory braces. Diaphragms are generally more economical for rolled shapes that are less than 32 inches deep. Cross frames are generally more economical for built-up beams that are 32 inches and deeper.

6-68. Diaphragms are rolled shapes used in a lateral-bracing system *(Figure 6-8)*. The diaphragm depth should be at least half the depth of the steel stringer. Construct diaphragms from the lightest materials available. Although the most suitable diaphragms are constructed using channel sections, any rolled shape (such as an I-beam) is satisfactory. Precut ends of stringers are available for fabricating diaphragms. Structural Ts can be used as diaphragms. Form these shapes by cutting the excess stringer material in half, along the centerline of the web. When using structural Ts, place the flange as close as possible to the stringer's compression flange (which is the top flange) and weld the connections. A bolted connection (with 3/4-inch or 7/8-inch bolts at a minimum spacing along a single row) may also be used. See *Chapter 9* for more information.

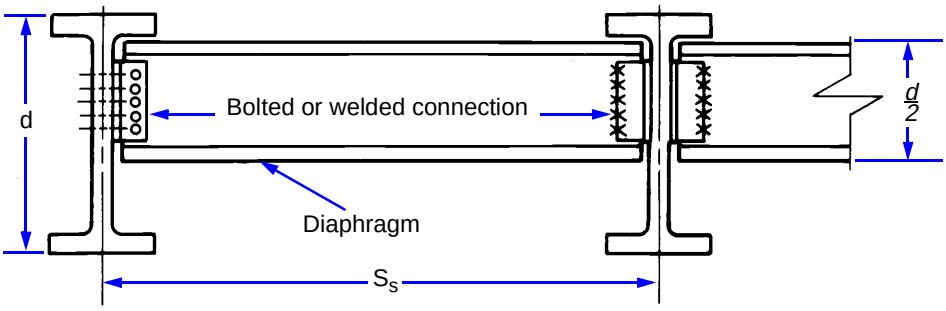

LEGEND:
d = depth of stringer
S_s = center-to-center stringer spacing

Figure 6-8. Highway-Bridge Diaphragm

6-69. Cross frames are used when the depth of the stringer exceeds 32 inches. Use equal leg angles configured into a cross frame as a more economical alternative to using diaphragms *(Figure 6-9).* However, the increased cost of cutting and fabrication outweighs any material savings. Minimum requirements of the angles are that—

- The dimensions of the member should not be smaller than 3 x 3 x 3 1/8 inches.
- The thickness of the member should be greater than one-tenth the length of the longer leg.
- The ratio of the span length to the radius of gyration of the section used for bracing *(12L / r,* where L is in feet and r is in inches) must be less than or equal to 200.

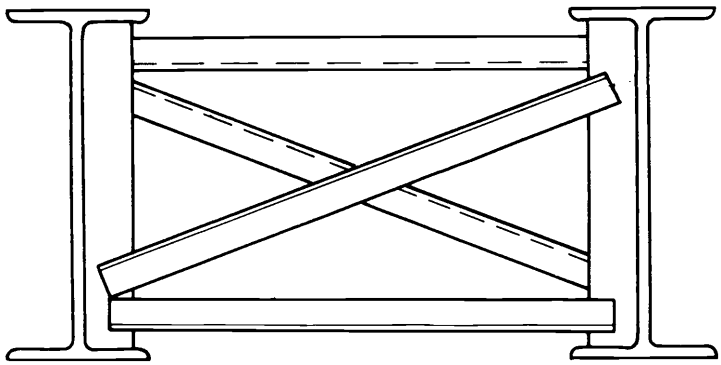

Figure 6-9. Cross-Frame Beam Bracing

DEAD-LOAD CHECK

6-70. After designing the deck and selecting the stringer size, check the initial dead-load assumption for any necessary corrections. The total dead load per stringer consists of the combined dead loads of the deck system, the stringers, the lateral bracing, and any accessories. Any changes in the total dead-load value may result in an increase or decrease of the required section modulus.

Component Loads

6-71. Compute the dead load for the deck as follows:

$$w_d = \frac{b_s U_m t_s}{12{,}000} \quad (6\text{-}35)$$

where—

w_d = *dead load due to the deck, in kpf*
b_S = *slab width in the transverse direction, in feet (usually* $b_R + 4$*)*
U_m = *unit weight of the material, in pounds per cubic foot (Table 6-4, page 6-10)*
t_S = *slab thickness, in inches*

6-72. Compute the dead load for the wearing surface as follows:

$$w_w = \frac{b_R U_w t_w}{12{,}000} \quad (6\text{-}36)$$

where—

w_w = *dead load due to the wearing surface, in kpf*
b_R = *curb-to-curb width, in feet*
U_w = *unit weight for wearing-surface material, in pounds per cubic foot (Table 6-4)*
t_w = *wearing-surface thickness, in inches*

6-73. Compute the dead load for the stringers as follows:

$$w_s = \frac{A_t U_m N_s}{144{,}000} \quad (6\text{-}37)$$

where—

w_S = *weight of the timber stringers, in kpf*
A_t = *cross-sectional area of one timber stringer, in square inches*
U_m = *unit weight of the material, in pounds per cubic foot (Table 6-4)*
N_S = *total number of stringers in the span*

6-74. For steel stringers, the last number in the nomenclature of a steel section corresponds to its weight (in pounds per foot). For example, as shown in *Appendix D*, a W27x94 would indicate that this section weighs 94 pounds per foot. Compute the weight due to the steel stringers as follows:

$$w_s = \frac{W_s N_s}{1{,}000} \quad (6\text{-}38)$$

where—

w_S = *weight of steel stringers, in kpf*
W_S = *weight of the steel section, in pounds per foot (Appendix D)*
N_S = *total number of stringers in the span*

6-75. Compute the dead load due to accessories as follows:

$w_{acc} = 0.1$ for timber-deck bridges (6-39)

or—

$w_{acc} = 0.4$ for concrete-deck bridges (6-40)

where—

w_{acc} = *dead load due to the accessories, in kpf*

6-76. Compute the length of the lateral bracing as follows:

$$L_b = (N_s - 1)\left(S_s - \frac{t_{ws}}{12}\right) \quad (6\text{-}41)$$

where—

L_b = *length of the lateral braces, in feet*
N_S = *number of stringers in the transverse direction of the bridge*
S_S = *actual center-to-center stringer spacing, in feet (equation 6-2)*
t_{ws} = *thickness of the web of the stringer, in inches*

and—

$$w_b = \frac{(N_b - 2)L_b U_m}{L} \quad (6\text{-}42)$$

where—

w_b = *weight of the lateral braces, in kpf*
N_b = *total number of lateral braces in the span*
L_b = *length of the lateral braces, in feet (equation 6-41)*
U_m = *unit weight of the lateral-bracing material, in kpf (the last number in the nomenclature is the kpf for steel and 0.1 kpf for timber)*
L = *design span length, in feet*

Actual Dead Loads

6-77. Compute the total actual dead load as follows:

$$W'_{DL} = w_d + w_w + w_s + w_{acc} + w_b \quad (6\text{-}43)$$

where—

W'_{DL} = *total actual dead load, in kpf*
w_d = *dead load due to the deck, in kpf (equation 6-35)*
w_w = *dead load due to the wearing surface, in kpf (equation 6-36)*

w_S = *weight of the stringer, in kpf (equation 6-37 for timber and equation 6-38 for steel)*

w_{acc} = *dead load due to the accessories, in kpf (equation 6-39 for timber-deck bridges and equation 6-40 for concrete-deck bridges)*

w_b = *weight of the lateral braces, in kpf (equation 6-42)*

6-78. Compute the actual dead load carried per stringer as follows:

$$w'_{DL} = \frac{W'_{DL}}{N_s} \quad (6\text{-}44)$$

where—

w'_{DL} = *actual dead load carried per stringer, in kpf*

W'_{DL} = *total actual dead load, in kpf (equation 6-43)*

N_S = *total number of stringers in the span*

6-79. Compare the actual dead load to the estimated design dead load per stringer as follows:

$$w'_{DL} \leq \frac{W_{DL}}{N_s} \quad (6\text{-}45)$$

where—

w'_{DL} = *actual dead load carried per stringer, in kpf (equation 6-44)*

W_{DL} = *estimated design dead load, in kpf (equation 6-22)*

N_S = *total number of stringers in the span*

6-80. If the results of *equation 6-45* work, then the selected bridge components are considered adequate based on the estimated dead load. Complete the design and classify the bridge as described in *Chapter 3*. If the results of *equation 6-45* do not work, adjust the stringer size by redoing all the necessary calculations as follows:

- Replace the estimated design dead load *(equation 6-22)* with the total actual dead load *(equation 6-43)*.
- Recompute all related equations to obtain a new section modulus, and select a new stringer section.
- Check the dead-load requirements with the values and continue recomputing until the results of *equation 6-45* work.

SHEAR-FORCE CHECK

6-81. After selecting a stringer size, check the stringer's shear capacity. In most timber-stringer bridges with spans of less than 20 feet, shear controls the design. In steel-stringer bridges with a high design classification and short spans (20 feet or less), shear may be a critical factor.

Dead-Load Shear per Stringer

6-82. Assume that the design dead-load shear is equally distributed among all the stringers. Compute the design dead-load shear per stringer as follows:

$$v'_{DL} = \frac{w'_{DL}L}{2N_S} \quad (6\text{-}46)$$

where—

v'_{DL} = *design dead-load shear per stringer, in kips*
w'_{DL} = *actual dead load carried per stringer, in kpf (equation 6-44)*
L = *design span length, in feet*
N_S = *total number of stringers*

Design Live-Load Shear

6-83. Determine the design live-load shear. Use *Table B-3, pages B-10 through B-13.*

6-84. **Effective Live-Load Shear per Stringer.** The effective live-load shear must account for the loads at the abutments or intermediate supports and for those further out on the span. Since steel-stringer bridges act very similarly to glue-laminated timber bridges, the equations used to compute the effective live-load shear per stringer are the same. The live-load shear per stringer corresponds to the largest value from the following equations:

- **Wheeled vehicle, one traffic lane.**

$$v_{LL} = \left(0.5 + \frac{S_s}{32}\right)V_A + \left(\frac{V'_{LL} - V_A}{N_{1,2}}\right) \quad (6\text{-}47)$$

where—

v_{LL} = *effective live-load shear per stringer, in kips*
S_S = *actual center-to-center stringer spacing, in feet (equation 6-2)*
V_A = *heaviest axle load, in kips (Table B-1, pages B-2 through B-5, Column 4)*
V'_{LL} = *design live-load shear for wheeled vehicles, in kips (paragraph 6-83)*
$N_{1,2}$ = *effective number of stringers (Table 3-3, page 3-14)*

- **Wheeled vehicle, two or more traffic lanes.**

$$v_{LL} = \left(\frac{S_s - 2}{S_s}\right)V_A + \left(\frac{V'_{LL} - V_A}{N_{1,2}}\right) \quad (6\text{-}48)$$

where—

v_{LL} = *effective live-load shear per stringer, in kips*
S_S = *actual center-to-center stringer spacing, in feet (equation 6-2)*
V_A = *heaviest axle load, in kips (Table B-1, Column 4).*
V'_{LL} = *design live-load shear for wheeled vehicles, in kips (paragraph 6-83)*
$N_{1,2}$ = *effective number of stringers (Table 3-3)*

- **Tracked vehicle, one traffic lane.**

$$v_{LL} = \frac{V'_{LL}}{2} \quad (6\text{-}49)$$

where—

v_{LL} = *effective live-load shear per stringer, in kips*

V'_{LL} = *design live-load shear for tracked vehicles, in kips (paragraph 6-83)*

- **Tracked vehicle, two or more traffic lanes.**

$$v_{LL} = \left(\frac{S_s - 2}{S_s}\right)V'_{LL} \quad (6\text{-}50)$$

where—

v_{LL} = *effective live-load shear per stringer, in kips*
S_S = *actual center-to-center stringer spacing, in feet (equation 6-2)*
V'_{LL} = *design live-load shear for tracked vehicles, in kips (paragraph 6-83)*

6-85. **Design Live-Load Shear per Stringer.** Compute the design live-load shear per stringer as follows:

$$v'_{LL} = \left(\frac{L - 0.0833d_s}{L}\right)v_{LL} \geq 0.75v_{LL} \quad (6\text{-}51)$$

where—

v'_{LL} = *design live-load shear per stringer, in kips*
L = *design span length, in feet*
d_S = *depth of the steel stringer, in inches (Appendix D)*
v_{LL} = *effective live-load shear per stringer, in kips (the largest value of wheeled or tracked classification from equations 6-47 through 6-50)*

6-86. **Design Shear per Stringer.** Compute the design shear per stringer and the actual shear stress acting on the stringer as follows:

$$v = v'_{DL} + 1.15v'_{LL} \quad (6\text{-}52)$$

where—

v = *design shear per stringer, in kips*
v'_{DL} = *dead-load shear per stringer, in kips (equation 6-46)*
v'_{LL} = *design live-load shear per stringer, in kips (equation 6-51)*

and—

$$f'_v = \frac{3v}{2A_s} \leq F_v \quad (6\text{-}53)$$

where—

f'_v = *actual shear stress, in ksi*
v = *design shear per stringer, in kips (equation 6-52)*
A_S = *area of a stringer, in square inches (Appendix C for timber and Appendix D for steel)*
F_v = *allowable shear stress, in ksi (paragraph 6-53 for timber and paragraph 6-55 for steel)*

6-87. If the actual shear stress *(equation 6-53)* is less than or equal to the allowable shear stress, the stringer will not have to be adjusted. However, if the actual shear stress is greater than the allowable shear stress, select a larger stringer size that satisfies the shear strength and moment capacity requirements.

END-BEARING DESIGN (TIMBER STRINGERS)

6-88. Although bearing failure in timber stringers is rare, the bearing stress should still be checked. The minimum width of the cap (or sill) required for timber stringers is 6 inches *(Figure 6-10)*. Compute the actual bearing stress as follows:

$$f'_b = \frac{v}{b_s b_c} \qquad (6\text{-}54)$$

where—

f'_b = *actual bearing stress, in ksi*
v = *design shear per stringer, in kips (equation 6-52)*
b_S = *width of the timber stringer, in inches*
b_c = *cap or sill width, in inches (which should be ≥ 6 inches)*

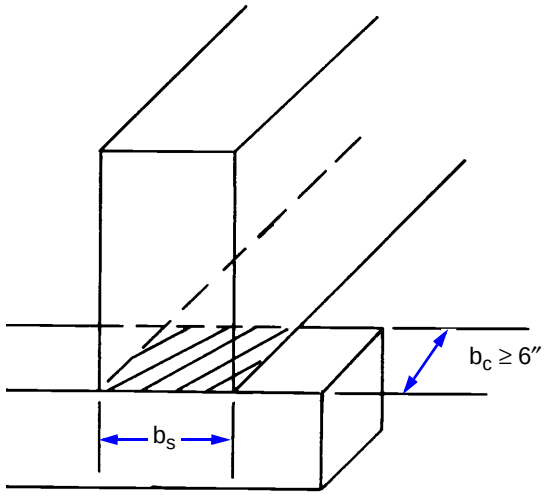

LEGEND:
b_c = width of cap
b_s = width of stringer

Figure 6-10. End-Bearing Timber Stringer

6-89. The actual bearing stress should not exceed the allowable bearing stress. The values for allowable bearing stress for timber are shown in *Table 6-8, page 6-30*. These design values are given for the wet- and dry-service conditions and were obtained as the average stress value from various species combinations. If the actual bearing stress exceeds the allowable

bearing stress, then increase either the width of the cap or the width of the stringer to provide a sufficient bearing area.

Table 6-8. Allowable Bearing Stress for Timber

Service Conditions	Allowable Bearing Stress (ksi)
Sawn lumber (wet condition)	1.15
Sawn lumber (dry condition):	
5 x 5 inches or larger	1.32
2 x 4 inches thick	1.73
Glue-laminated (wet or dry)	2.04

END-BEARING DESIGN (STEEL STRINGERS)

6-90. Bearing plates are designed to transmit the loads from the superstructure into the substructure. If the bearing-seat area is insufficient to carry the load, failure will occur. Bearing failure causes the materials that bear together to crush, which may lead to stringer-flange failure. Another type of failure is web crippling (failure of the web portion of the stringer). Web crippling occurs due to the stress concentrations at the junction of the flange and the web where the beam is trying to transfer compression from a wide flange to a narrow web. *Figure 6-11* shows various types of end-bearing failures. Bearing plates are designed to prevent flange failure and crushing of the supports. Web crippling can be prevented by designing end-bearing stiffeners.

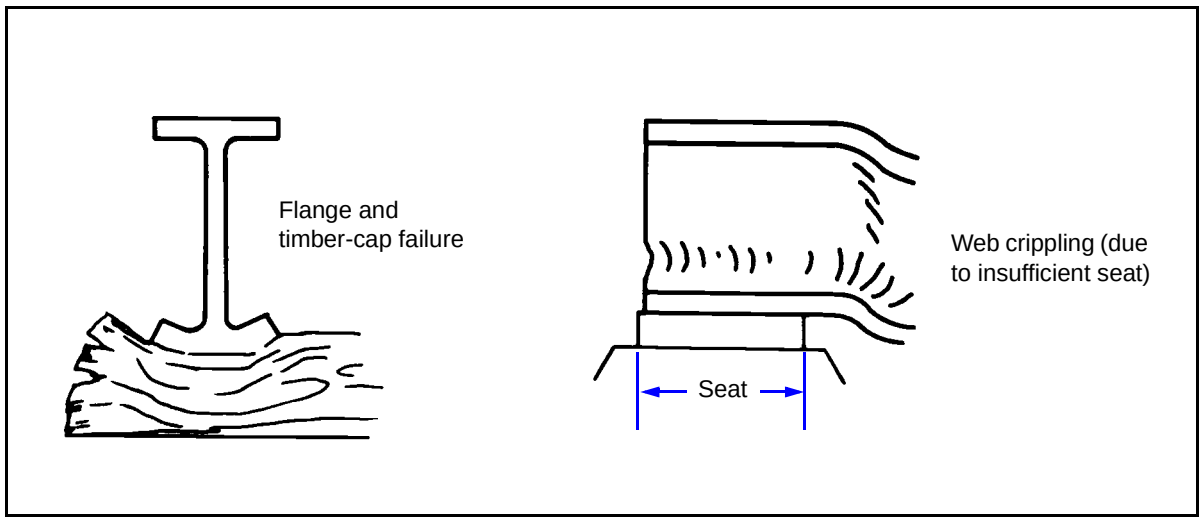

Figure 6-11. End-Bearing Failures

Bearing Plates

6-91. End-bearing plates are typically required when steel stringers rest on concrete or timber supports. Their design is based on the design shear transmitted to the support (adjusted if the actual dead load *[equation 6-45]* is greater than the estimated design dead load *[equation 6-22]*).

6-92. **Bearing-Plate Area.** The required bearing-plate area is determined by the allowable bearing stress of the support and the design shear that is carried to the support. Compute as follows:

$$A_{pl} = \frac{v}{F_B} \tag{6-55}$$

where—

A_{pl} = *bearing-plate area, in square inches*
v = *design shear per stringer, in kips (equation 6-52)*
F_B = *allowable bearing stress of the support material, in ksi (equal to* $0.75F_y$*)*

6-93. **Plate Width and Length.** The most economical plate design results when the seat width (which is the length of the plate) is increased while the plate width is minimized. The minimum width of the plate should be equal to the stringer-flange width. The minimum seat length is 6 inches. Therefore, the minimum plate area is six times the flange width.

6-94. **Plate Thickness.** Use these steps to determine the plate thickness.

Step 1. Compute the actual bearing stress as follows:

$$f'_B = \frac{v}{b_{pl} b_c} \tag{6-56}$$

where—

f'_B = *actual bearing stress, in ksi*
v = *design shear per stringer, in kips (equation 6-52)*
b_{pl} = *plate width, in inches (paragraph 6-93)*
b_c = *cap or sill width, in inches (should be greater than or equal to 6 inches)*

Step 2. Compute the required thickness of the bearing plate as follows:

$$t_{pl} = \sqrt{\frac{3f'_B\left(\frac{b_{pl}}{2} - t_f\right)^2}{F_b}} \tag{6-57}$$

where—

t_{pl} = *required plate thickness, in inches*
f'_B = *actual bearing stress, in ksi (equation 6-56)*
b_{pl} = *plate width, in inches (paragraph 6-93)*
t_f = *flange thickness, in inches*
F_b = *allowable bending stress, in ksi (paragraph 6-53 for timber and paragraph 6-55 for steel)*

Step 3. Select a bearing-plate thickness from the following available standard thicknesses:

- 1/32-inch increments (up to 1/2 inch).
- 1/16-inch increments (from 1/2 up to 1 inch).
- 1/8-inch increments (from 1 up to 3 inches).
- 1/4-inch increments (for 3 inches or greater).

Step 4. Build the bearing plate to the required thickness by laminating the plates. Fully weld the perimeters of the plate.

6-95. **Web Crippling.** Check for web crippling. If the actual bearing stress in the web exceeds the allowable bearing stress, use end-bearing stiffeners or increase the length of the bearing plate. Compute the actual bearing stress as follows:

$$f'_{bw} = \frac{v}{t_w(b_c + t_f)} \leq F_B \qquad (6\text{-}58)$$

where—

f'_{bw} = *actual bearing stress in the web, in ksi*
v = *design shear per stringer, in kips (equation 6-52)*
t_w = *web thickness, in inches*
b_c = *cap or sill width, in inches (should be greater than or equal to 6 inches)*
t_f = *flange thickness, in inches*
F_B = *allowable bearing stress, in ksi (equal to $0.9F_y$)*

End-Bearing Stiffeners

6-96. End-bearing stiffeners are normally not required for standard, rolled shapes unless abutment or intermediate-support dimensions restrict the length of the bearing plate. However, the web may have to be stiffened to prevent it from buckling. If end-bearing stiffeners are needed, construct them of angles or plates on each side of the stringer web. Position them over the center of the bearing at the end of each stringer. Ensure that they fit tightly against the flanges being loaded. Mill the top and bottom of the stiffener to bear against the flanges of the stringer, and extend them out as far as possible toward the edges of the flange *(Figure 6-12)*. Compute the minimum required thickness of the end-bearing stiffeners as follows:

$$t = \frac{L_e}{12}\sqrt{\frac{F_y}{33}} \qquad (6\text{-}59)$$

where—

t = *required thickness of end-bearing stiffeners, in inches*
L_e = *effective stiffener width, in inches (Figure 6-12)*
F_y = *yield strength of steel, in ksi (Table 6-7, page 6-18)*

6-97. Provide sufficient welding (or bolting) to transfer the total end shear through the web. Do not crimp the angles used as end stiffeners to fit over the flange angles. Instead, use filler plates between the web and the stiffeners.

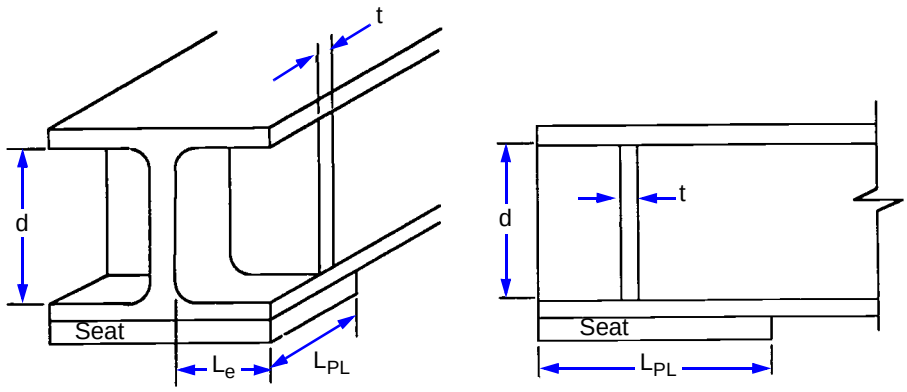

End View **Side View**

LEGEND:

d = stiffener depth (web depth)
L_e = effective stiffener length
L_{PL} = seat length
t = stiffener thickness

Figure 6-12. End-Bearing Stiffener

Chapter 7

Substructure Design

To design a substructure properly, a designer must know or assume the loads acting on the substructure. Assumed loads must be verified before completing the final design. Since many loads can act on the substructure, not all loads will act with full intensity at the same time. To apply the appropriate loads to the substructure design, the designer must determine the critical combination of loads for given conditions.

ABUTMENT DESIGN PROCEDURE

7-1. There are separate design procedures depending on the type of load acting on the abutment. Determine the vertical or horizontal load as discussed below.

VERTICAL LOADS

7-2. For abutments constructed of piles or posts and footings, determine the total loads acting on the entire abutment. For continuous abutments (such as mass or reinforced concrete) *(Figure 7-1)*, determine the load per foot of abutment length. The dead load acts vertically through the centerline of the bearing plate *(Figure 7-2, page 7-2)*.

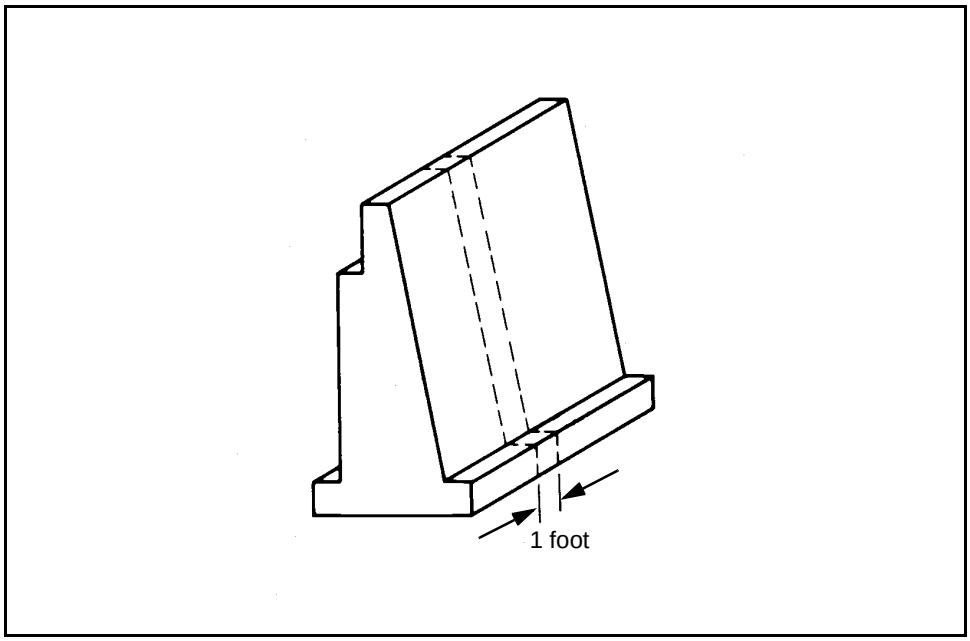

Figure 7-1. Typical Concrete Abutment

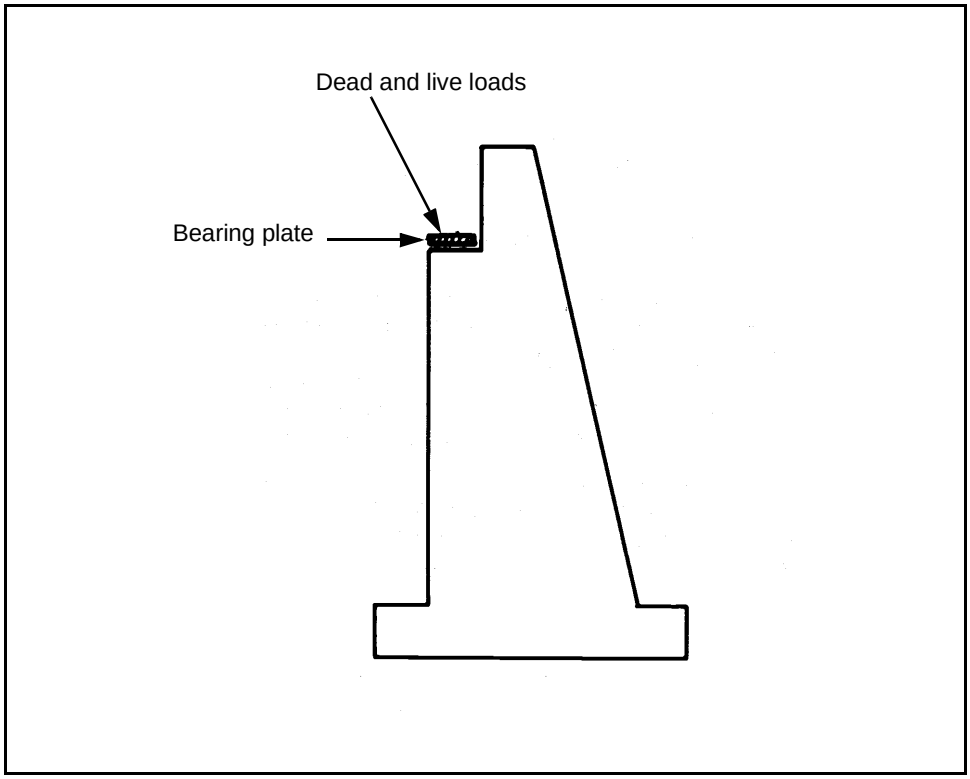

Figure 7-2. Dead- and Live-Load Action on an Abutment

Superstructure Dead Load

7-3. Compute the superstructure dead load as follows:

- **Piles or posts.**

$$P_{DL} = W'_{DL}\frac{L}{2} \quad (7\text{-}1)$$

where—

P_{DL} = *dead load on the piles or posts, in kips*
W'_{DL} = *total actual dead load, in kpf (equation 6-43)*
L = *span length, in feet*

- **Concrete.**

$$P_{DL} = W'_{DL}\frac{L}{2L_a} \quad (7\text{-}2)$$

where—

P_{DL} = *dead load on concrete, in kpf*
W'_{DL} = *total actual dead load, in kpf (equation 6-43)*
L = *span length, in feet*
L_a = *abutment length, in feet*

Live Load

7-4. The live load acts vertically through the centerline of the bearing plate *(Figure 7-2)*. Impact loads are not included. Compute the live load as follows:

- **Piles or posts.**

$$P_{LL} = V_{LL}N \quad (7\text{-}3)$$

where—

P_{LL} = *live load on piles or posts, in kips*
V_{LL} = *maximum live-load shear per lane, in kips (larger value from Figure B-3 or B-4, pages B-17 and B-18)*
N = *number of lanes*

- **Concrete.**

$$P_{LL} = \frac{V_{LL}N}{L_a} \quad (7\text{-}4)$$

where—

P_{LL} = *live load on concrete, in kpf*
V_{LL} = *maximum live-load shear per lane, in kips (larger value from Figure B-3 or B-4)*
N = *number of lanes*
L_a = *abutment length, in feet*

Abutment Weight

7-5. The weight of timber or steel abutments is negligible since it is small in comparison to other vertical abutment loads. However, the weight of concrete abutments should be included in the design loads. Divide the cross-sectional shape of an abutment into sections of known size, shape, and cross-sectional area *(Figure 7-3, page 7-4)*. The weight of any section acts vertically through the centroid of that section. Compute the weight of any section per foot of abutment length as follows:

$$w = Au \quad (7\text{-}5)$$

where—

w = *weight of any abutment section (1-foot-wide strip), in kpf*
A = *area of the abutment section, in square feet*
u = *unit weight of abutment material (concrete weighs 0.15 kips per cubic foot)*

Soil Forces

7-6. Use *equation 7-5* and compute the weight of soil acting on the rear face and heel of the abutment (*Appendix I*). To account for vehicular traffic approaching the abutment, assume placing a hypothetical layer of soil

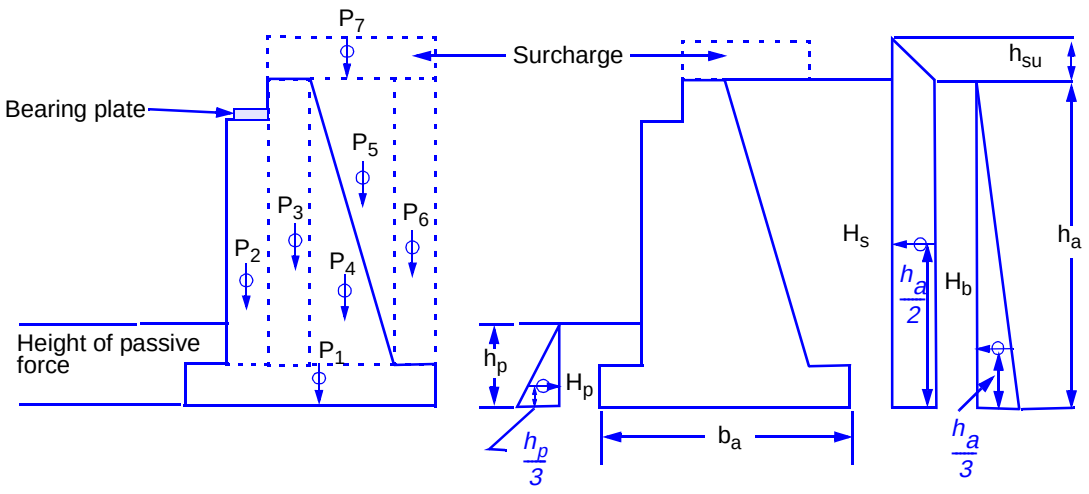

LEGEND:

b_a = abutment width, in feet	h_p = height of soil providing passive resistance
h_a = abutment height	H_s = horizontal force due to surcharge
H_b = horizontal force due to active earth pressure	h_{su} = height of surcharge
H_p = horizontal force due to passive earth pressure	P_{1-7} = vertical loads for Sections 1-7

Figure 7-3. Abutment Sectioning, Load Centers, and Soil Forces

(surcharge) over the backfill at the abutment. *Figure 7-3* shows vertical soil forces. Compute the height of the surcharge as follows:

$$h_{su} = \frac{MLC}{20} \qquad (7\text{-}6)$$

where—

h_{su} = *surcharge height, in feet*
MLC = *military load classification*

Hydrostatic Uplift

7-7. Properly locate the abutment, and provide drainage to avoid hydrostatic uplift forces on the abutment. Eliminate hydrostatic uplift forces by locating the abutment well above the flood stage, by providing granular material behind and under the abutment, and by installing weep holes in the abutment. Methods for draining water from behind and under abutments are discussed in *paragraphs 7-31* and *7-44*.

HORIZONTAL LOADS

7-8. Horizontal loads acting on abutments are created by soil, water, temperature, and vehicles. These loads are computed per foot of abutment length.

Soil Forces

7-9. Use the Rankine equations from *Introductory Soil Mechanics and Foundations: Geotechnic Engineering* to compute the horizontal surcharge and backfill forces as shown below. *Figure 7-3* shows the actions of these forces. In most cases, passive pressure is so negligible that it is not considered, resulting in a somewhat conservative design.

- **Coefficient of active earth pressure.**

$$K_a = \tan^2\left[45° - \left(\frac{\theta}{2}\right)\right] \quad (7\text{-}7)$$

where—

K_a = *coefficient of active earth pressure*
θ = *angle of internal friction (Table H-1, page H-1)*

- **Coefficient of passive earth pressure.**

$$K_p = \tan^2\left[45° + \left(\frac{\theta}{2}\right)\right] \quad (7\text{-}8)$$

where—

K_p = *coefficient of passive earth pressure*
θ = *angle of internal friction (Table H-1)*

- **Soil forces and point of application.**
  - **Horizontal surcharge force.**

$$H_s = (K_a u h_{su}) h_a \,@\, \frac{h_a}{2} \quad (7\text{-}9)$$

where—

H_s = *horizontal surcharge force, in kpf*
K_a = *coefficient of active earth pressure (equation 7-7)*
u = *unit weight of backfill, in kips per cubic foot (Table H-1)*
h_{su} = *surcharge height, in feet (equation 7-6)*
h_a = *abutment height, in feet*

  - **Horizontal backfill force.**

$$H_b = (K_a u h_a)\left(\frac{h_a}{2}\right) @ \frac{h_a}{3} \quad (7\text{-}10)$$

where—

H_b = *horizontal backfill force, in kpf*
K_a = *coefficient of active earth pressure (equation 7-7)*
u = *unit weight of backfill, in kips per cubic foot (Table H-1)*
h_a = *abutment height, in feet*

- **Horizontal force due to passive earth pressure.**

$$H_p = K_p u h_p\left(\frac{h_p}{2}\right) \quad (7\text{-}11)$$

where—

H_p = *horizontal force due to passive earth pressure, in kpf*
K_p = *coefficient of passive earth pressure (equation 7-8)*
u = *unit weight of backfill, in kips per cubic foot (Table H-1, page H-1)*
h_p = *height of passive force, in feet (Figure 7-3, page 7-4)*

Water Forces

7-10. Water that collects behind an abutment will create a horizontal force that can be eliminated by proper drainage. See *paragraph 7-45* for methods of draining water from behind and under abutments.

Temperature Forces

7-11. Temperature forces are negligible in simply supported stringer bridges designed for military purposes. Bearing plates support each end of every steel stringer. One end of the stringer is rigidly attached so that there is no movement between the stringer and the support. The other end is attached so that movement is allowed along the length of the stringer. As the stringer expands or contracts due to temperature changes, temperature forces are dissipated at the free end. The fixed bearing plate is normally placed on the abutment end of the stringer.

Vehicular Longitudinal Forces

7-12. As vehicles accelerate or brake on a bridge span, a longitudinal force is transmitted to the substructure through the fixed bearing plates. Compute the vehicular force as follows:

$$H_v = \frac{0.05WN}{L_a} \quad (7\text{-}12)$$

where—

H_v = *vehicle force per foot of abutment length, in kips*
W = *vehicle weight, in kips*
N = *number of vehicles per lane*
L_a = *abutment length, in feet*

7-13. The number of vehicles allowed per lane is based on the span length and the vehicle spacing (at least 100 feet). Since vehicles traveling in opposite directions have canceling effects on loads, the worst loading conditions occur when vehicles move in only one direction. Therefore, the number of vehicles on a span is for one lane only. At the expansion bearing plate, the vehicle force is zero. The vehicle force acts horizontally on the fixed bearing plate *(Figure 7-4)*.

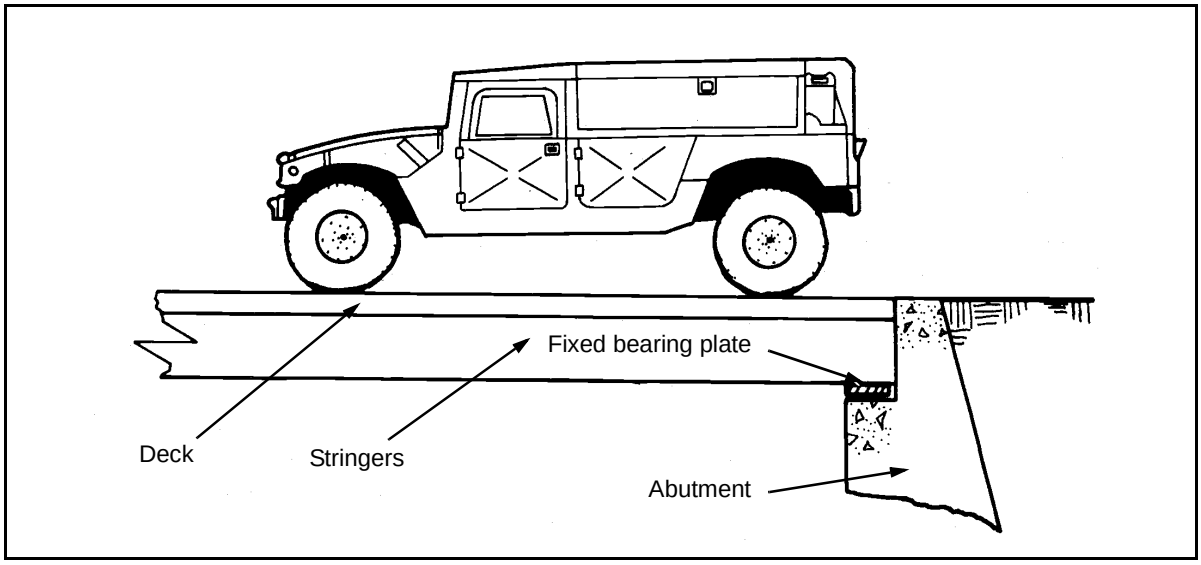

Figure 7-4. Vehicular Longitudinal Force

LATERAL LOADS

7-14. Lateral loads acting on abutments are negligible.

ABUTMENT SELECTION

7-15. Abutments may be timber, steel, concrete, or a combination of these materials. The abutments may rest directly on the soil (as in the case of concrete), or they may rest on footings or piles. *Figure 7-5* and *Figures 7-6* through *7-11, pages 7-8* through *7-10,* show typical abutments. *Table 7-1, page 7-11,* gives a general guide to the types of abutments used under various conditions.

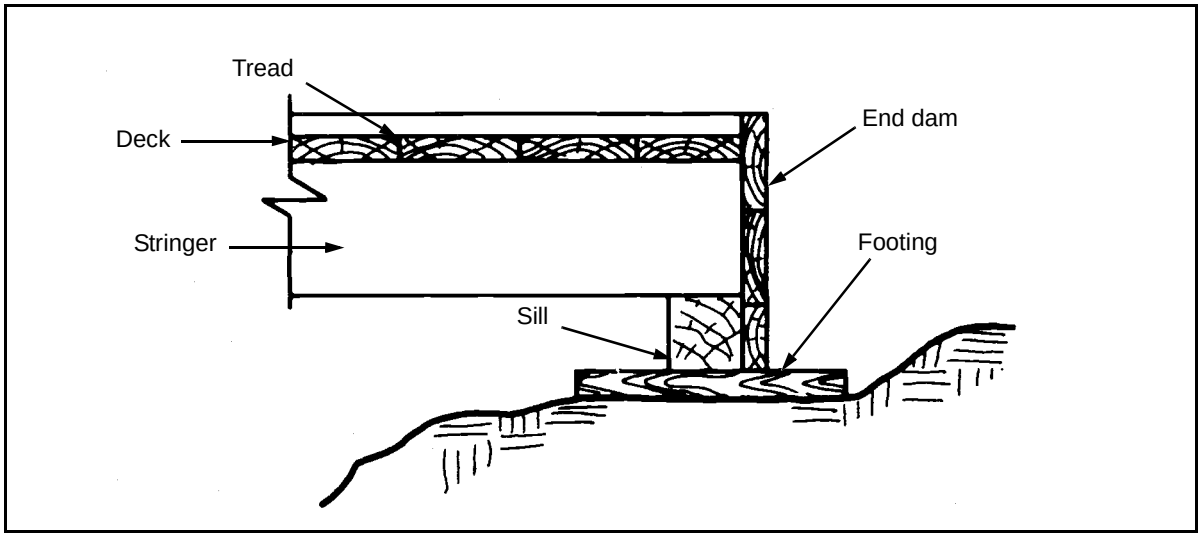

Figure 7-5. Timber-Sill Abutment

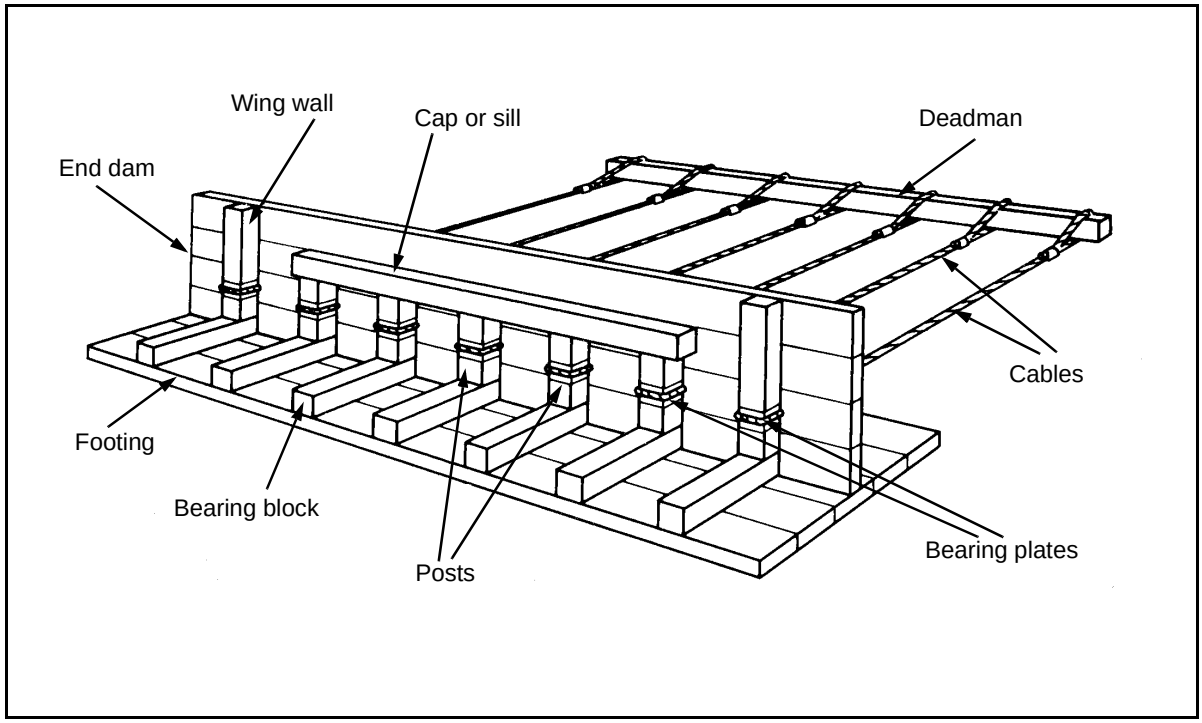

Figure 7-6. Timber-Bent Abutment

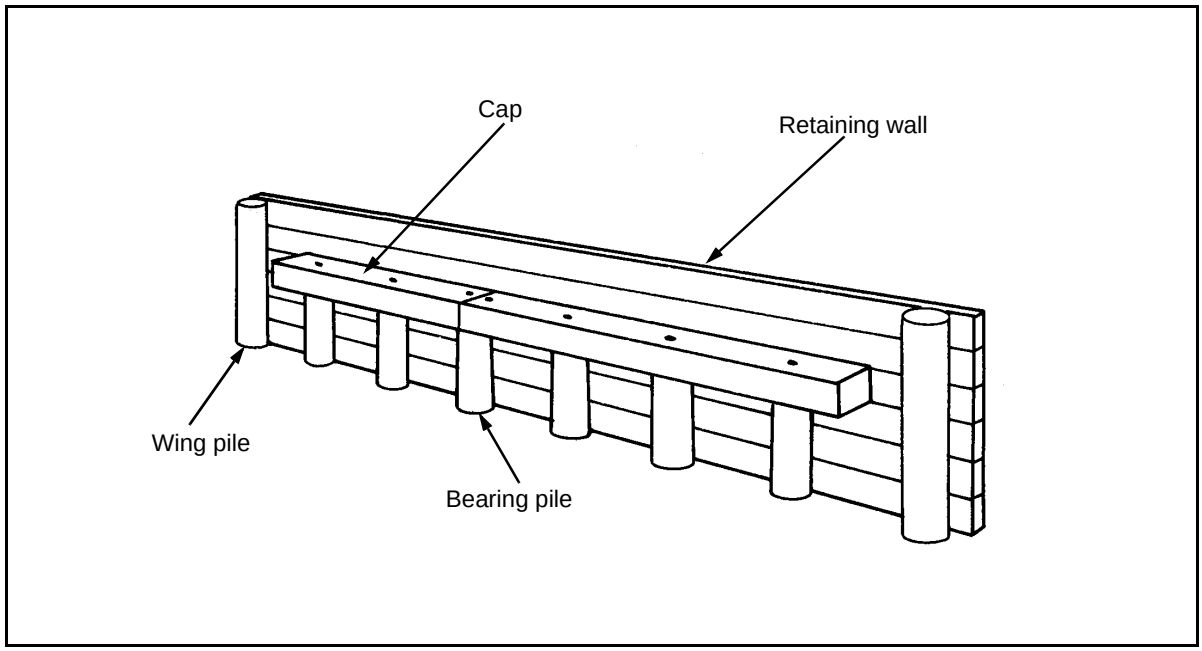

Figure 7-7. Timber-Pile Abutment

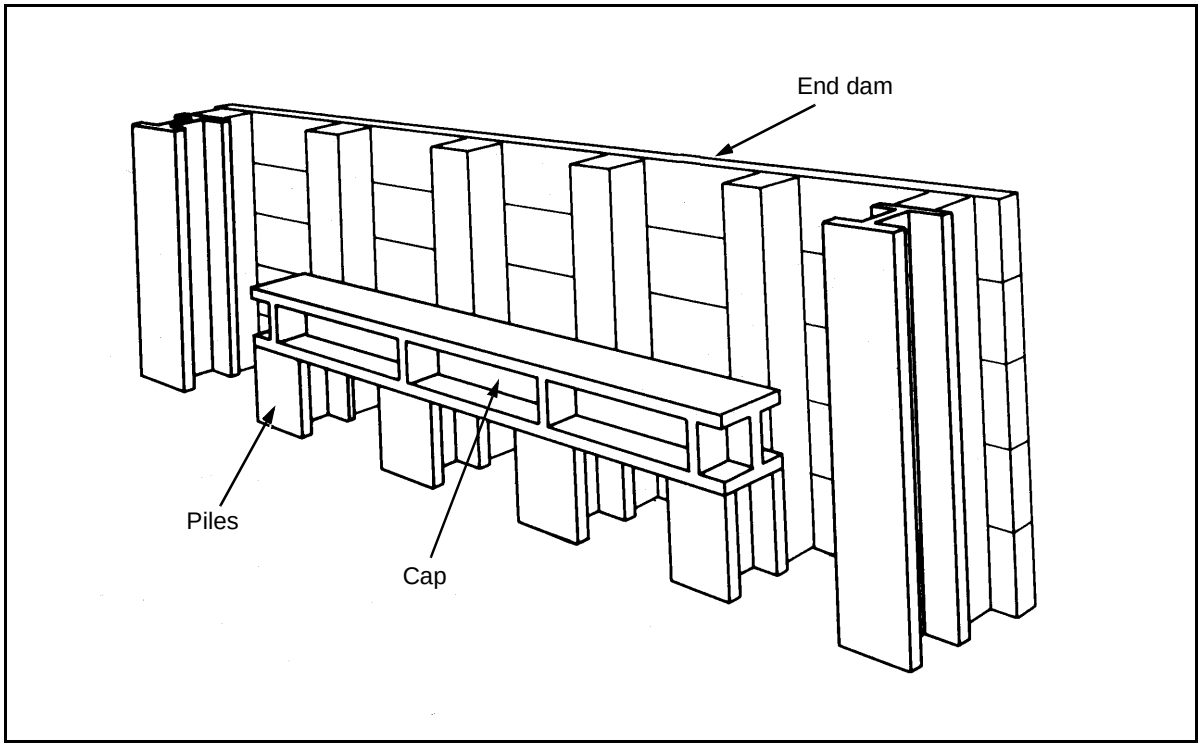

Figure 7-8. Steel-Pile Abutment

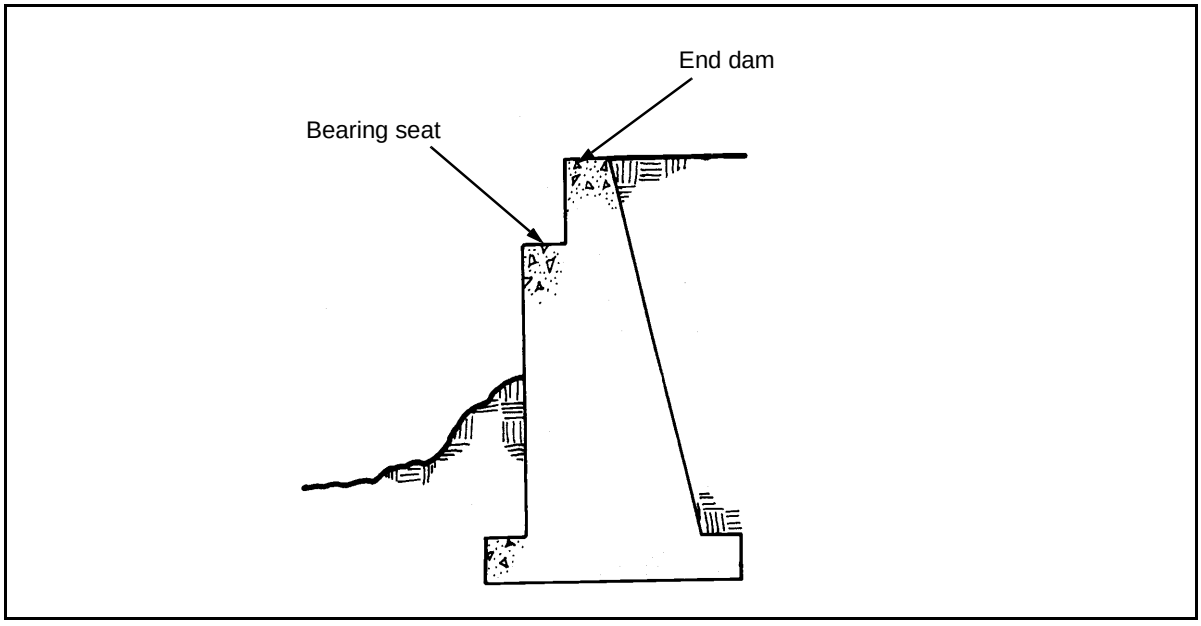

Figure 7-9. Mass-Concrete Abutment

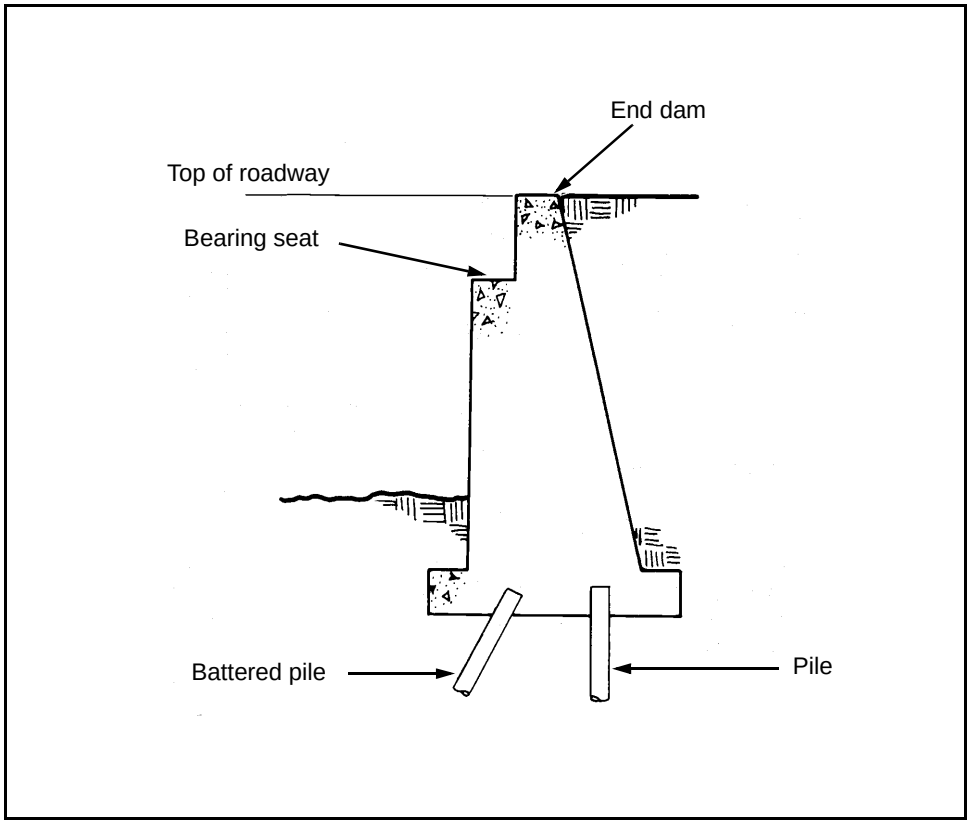

Figure 7-10. Concrete Abutment on Piles

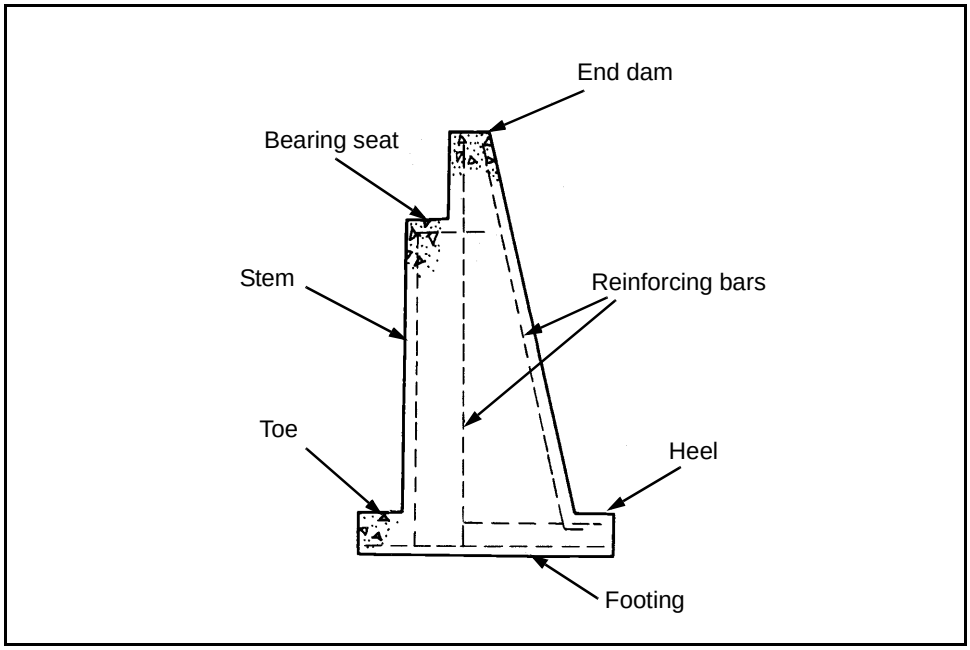

Figure 7-11. Reinforced Concrete Abutment

Table 7-1. Abutment Types

Type	Span	Height	Remarks
Timber sill	≤ 25 feet	≤ 3 feet	Highway bridges only. Designed for vertical loads only and steel or timber stringers.
Timber bent	≤ 30 feet	≤ 6 feet	High bridges only. Designed for vertical loads. Deadman used for horizontal stability. Used with steel or timber stringers.
Timber or steel pile	Any length	≤ 10 feet	Designed for vertical and longitudinal loads and steel or timber stringers.
Mass or reinforced concrete	Any length	≤ 20 feet	Most permanent type. Designed for vertical and longitudinal loads and steel or timber stringers.

7-16. The general principles of abutment design are applicable to any type of abutment resting on the ground or on footings, with only a few modifications for abutments resting on piles. These principles also apply directly to the design of retaining walls. Abutments must be designed to avoid the following types of failure:

- Overturning.
- Sliding.
- Soil bearing.
- Soil shear.
- Material.

7-17. Since abutments are subjected to various types of loadings during construction and use, the load cases must be considered *(Table 7-2)*. *Figure 7-12, page 7-12*, shows a sample chart of abutment loads and moments.

Table 7-2. Load Cases

Case	Description	Vertical Loads	Horizontal Loads
I	Unloaded	Abutment weight plus the soil weight (including the surcharge)	Soil forces (including the surcharge)
II	Dead load	Case I plus the superstructure's dead load	Case I
III	Live load	Case II plus the live load minus the surcharge	Case II plus the vehicular longitudinal force minus the surcharge

Case	Load (kips)	Arm (ft)	M_r (kip-ft)	Load (kips)	Arm (ft)	M_o (kip-ft)
—	P_1 = 1.425	2.375	3.384	H_s = 0.902	4.000	3.608
—	P_2 = 0.438	1.500	0.657	H_b = 1.202	2.667	3.206
—	P_3 = 0.900	2.500	2.250	—	—	—
—	P_4 = 0.450	3.333	1.500	—	—	—
—	P_5 = 0.390	3.667	1.430	—	—	—
—	P_6 = 0.585	4.375	2.559	—	—	—
—	P_7 = 1.073	3.375	3.621	—	—	—
I	$\sum P$ = 5.261 P_{DL} = 0.821	1.500	$\sum M_r$ = 15.401 1.232	$\sum H$ = 2.104	—	$\sum M_o$ = 6.814
II	$\sum P$ = 6.082 P_{LL} = 6.171	1.500	$\sum M_r$ = 16.633 9.527	$\sum H$ = 2.104 H_v = 0.250	4.920	$\sum M_o$ = 6.814 1.230
	$-P_7$ = 1.073	3.375	-3.621	$-H_s$ = 0.902	4.000	-3.608
III	$\sum P$ = 11.180	—	$\sum M_r$ = 22.269	$\sum H$ = 1.452	—	$\sum M_o$ = 4.436

LEGEND:

H = horizontal load
H_b = horizontal backfill force, in kpf
H_s = horizontal surcharge force, in kpf
H_v = vehicle force per foot of abutment length, in kips
M_o = overturning moment, in kpf
M_r = minimum resisting moment per pile, in kip-feet
P = total load, in kips
P_{1-7} = vertical loads for Sections 1-7
P_{DL} = dead load of the substructure, in kips
P_{LL} = live load of the substructure, in kips

Figure 7-12. Sample Chart of Abutment Loads and Moments

ABUTMENT DESIGNS

TIMBER-FOOTING AND TIMBER-BENT ABUTMENTS

7-18. Determine the loads using the procedures in *paragraphs 7-2* through *7-4*. Consider only live and dead loads. Compute the total load for the abutment as follows:

$$P = P_{DL} + P_{LL}\left(\frac{N_s}{4}\right) \quad (7\text{-}13)$$

where—

P = *total load, in kips*
P_{DL} = *dead load of the substructure, in kips (equation 7-1 or 7-2)*
P_{LL} = *live load of the substructure, in kips (equation 7-3 or 7-4)*
N_s = *number of stringers supported by the abutment (equation 6-1)*

Abutments

7-19. Choose the abutment length so that the following requirement is met:

$$b_R < L_a \leq (b_R + 4\ ft) \quad (7\text{-}14)$$

where—

b_R = *curb-to-curb roadway width, in feet*
L_a = *abutment length, in feet*

Posts

7-20. Compute the allowable bearing capacity per post and the required number of posts as follows:

- **Allowable bearing capacity per post.**

$$P_B = F_c A \quad (7\text{-}15)$$

where—

P_B = *allowable bearing capacity of the pile or post, in kips*
F_c = *allowable compression, parallel to the grain of the post material, in ksi (Table C-1, pages C-3 through C-6)*
A = *cross-sectional area of the post, in square inches (Table C-5, page C-10)*

- **Required number of posts.** The number of posts must be greater than or equal to the number of stringers.

$$N_p = \frac{P}{P_B} \quad (7\text{-}16)$$

where—

N_p = *number of posts in the abutment (the number of posts is greater than or equal to the number of stringers*
P = *total load, in kips (equation 7-13)*
P_B = *allowable bearing capacity of the post, in kips (equation 7-15)*

Caps and Sills

7-21. The following equations apply to both caps and sills. The absolute minimum size for a cap or sill is 6 x 8 inches. If a sill is used, it should be the same size as the cap.

- **Width.** After determining the cap or sill width for stringers, substitute the post size for the stringer size in the following equation and use the larger of the two results as the cap or sill width:

$$b_c = \frac{P}{N_p b_s F_c} \quad (7\text{-}17)$$

where—

b_c = *cap or sill width, in inches*
P = *total load, in kips (equation 7-13)*
N_p = *number of posts in the abutment (equation 7-16 or DA Form 1249)*
b_s = *stringer or post width, in inches*
F_c = *allowable compression of the supports perpendicular to the grain of the support material, in ksi (Table C-1, pages C-3 through C-6)*

- **Depth.** Compute the depth as follows:

$$d = \frac{L_a 12}{(N_p - 1)5} \quad (7\text{-}18)$$

where—

d = *cap depth, in inches*
L_a = *abutment length, in feet*
N_p = *number of posts (equation 7-16)*

Footings

7-22. Each post or stringer (whichever is used) must rest on a footing. Compute the allowable length, the area, the capacity, and the number of footings as follows:

- **Allowable length.**

$$L_f = b_c + K \quad (7\text{-}19)$$

where—

L_f = *footing length, in inches. (Round the footing length down if desired.)*
b_c = *cap or sill width, in inches (equation 7-17)*
K = *soil-bearing-capacity coefficient (Figure H-1, page H-3)*

- **Area.**

$$A_f = L_f b_f \quad (7\text{-}20)$$

where—

A_f = *footing area, in square inches*
L_f = *actual footing length, in inches (equation 7-19)*
b_f = *actual footing width, in inches*

- **Capacity.**

$$F_f = A_f F_{Bs} \quad (7\text{-}21)$$

where—

F_f = *footing capacity, in kips*

A_f = *footing area, in square feet (equation 7-20)*
F_{Bs} = *soil bearing capacity, in kips per square foot (ksf) (Table H-1)*

- **Number of footings.** The required number of footings will be greater than or equal to the number of posts or stringers.

$$N_f = \frac{P}{F_f} \quad (7\text{-}22)$$

where—

N_f = *number of footings*
P = *total load, in kips (equation 7-13)*
F_f = *footing capacity, in kips (equation 7-21)*

End Dam and Deadmen

7-23. Material used in an end dam should be at least 3 inches thick to prevent failure from earth pressure. Install deadmen if using a timber bent (see *paragraph 7-58* for a deadman design).

TIMBER- AND STEEL-PILE ABUTMENT DESIGNS

7-24. Follow the procedures described for the design of pile foundations in *paragraph 7-100*.

MASS-CONCRETE ABUTMENT DESIGN

7-25. Mass-concrete abutments are used when the abutment will or is expected to be in contact with the stream or if the required height is greater than ten feet. Design mass-concrete abutments by trial and error.

Dimensions

7-26. Base the estimate of the overall height of an abutment on local site conditions. An abutment should extend far enough below the ground's surface so that it rests on firm soil. If the overall height exceeds 20 feet, a mass-concrete structure becomes uneconomical and a pile foundation should be considered. Once the abutment height is determined, use the following guidelines to estimate other dimensions *(Figure 7-13, page 7-16)*. Always check the safety of any abutment designed by these guidelines. Assume the following dimensions and loads:

- The abutment width is 40 to 60 percent of the abutment height, in feet.
- The footing height is 1 to 2 feet.
- The toe and heel width are ¾ to 1 ½ feet and are less than or equal to 75 percent of the footing height.
- The seat width is greater than or equal to the cap or sill width, and the cap or sill width is greater than or equal to ¾ foot.
- The superstructure height is measured from the bottom of the bearing plate to the top of the deck, in feet.

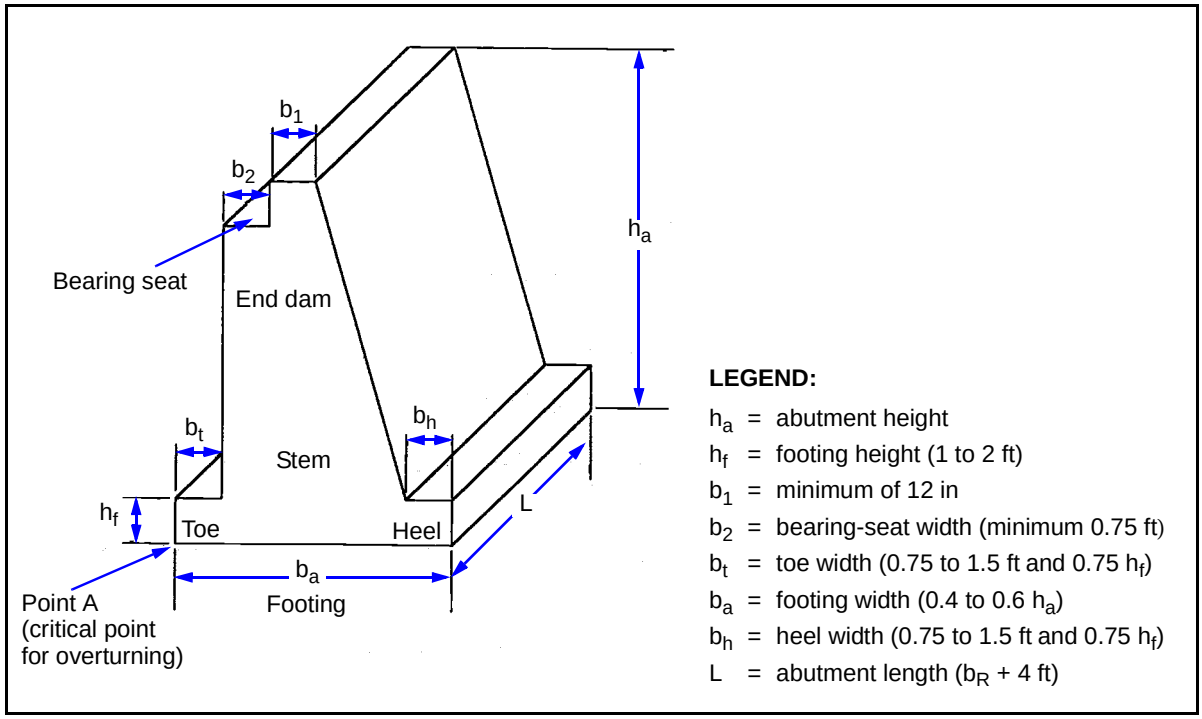

Figure 7-13. Mass-Concrete-Abutment Design Dimensions

7-27. If any of the safety criteria fail, choose new dimensions. A heel and toe are not mandatory for mass-concrete abutments, but they are recommended because they provide additional stability and aid in drainage. Once the preliminary dimensions are selected, determine all the loads that act on the abutment, using the methods described in *paragraphs 7-2* and *7-8*.

Loading Case Values

7-28. For easy computations, set the values for the loads, lever arms, and moments as shown in *Figure 7-12, page 7-12*. The moment arm is the perpendicular distance from the abutment toe to the line of action of the given load. Determine the moments about the toe, since this is the critical point for overturning. Use the tabulated values to check the safety of the abutment against sliding, overturning, and soil-bearing failure.

Sliding Check

7-29. Compute the safety factor of sliding for loading Cases I and III as follows:

$$SF = \frac{\Sigma P(K_f)}{\Sigma H} \geq 1.5 \qquad (7\text{-}23)$$

where—

SF = *safety factor (if the safety factor is less than 1.5 for any loading case, take steps to prevent sliding [as discussed below])*

ΣP = *total of the vertical loads, in kips (paragraph 7-2)*

K_f = *friction coefficient, (Table H-2, page H-2)*
ΣH = *total of the horizontal forces, in kips (paragraph 7-8)*

Overturning Check

7-30. Compute the safety factor of overturning for loading Cases I and III as follows:

$$SF \frac{\Sigma M_r}{\Sigma M_o} \geq 2 \quad (7\text{-}24)$$

where—

SF = *safety factor for overturning (if the safety factor is less than 2, take steps to prevent overturning [as discussed below])*
ΣM_r = *total of the resisting moments, in kip-feet (Figure 7-12)*
ΣM_o = *total of the overturning moments, in kip-feet (Figure 7-12)*

Sliding and Overturning Prevention

7-31. Do one or more of the actions discussed below to prevent sliding and overturning.

7-32. **Modify the Abutment or Heel.** Increase the size of the abutment or the length of the heel so that more weight acts vertically.

7-33. **Modify the Superstructure Placement.** If sliding or overturning is critical for Case I (unloaded) only, place the superstructure onto the abutment before backfilling the space behind the abutment.

7-34. **Modify the Friction Coefficient.** Increase the friction coefficient by adding a layer of gravel under the abutment. Use a filter layer to prevent fine material from washing out through the gravel.

7-35. **Install a Deadmen.** Install a deadmen behind the abutment. *Paragraph 7-58* describes a deadman design.

7-36. **Construct a Key.** Construct a key as shown in *Figure 7-14, page 7-18*. This key will develop passive earth forces that will help resist sliding. Use half the value of the horizontal force in safety computations, since the full value will probably never be developed.

- **Compute the horizontal force due to passive earth pressure.** Compute as follows:

$$H_f = \frac{K_p u (h_1^2 - h_2^2)}{2} \quad (7\text{-}25)$$

where—

H_f = *horizontal force due to the passive earth pressure, per foot of abutment, in kips*
K_p = *coefficient of passive earth pressure (equation 7-8)*
u = *unit weight of backfill, in kips per cubic foot (Table H-1, page H-1)*
h_1 = *passive force height, including the key, in feet (Figure 7-14)*
h_2 = *original passive force height, in feet (Figure 7-14)*

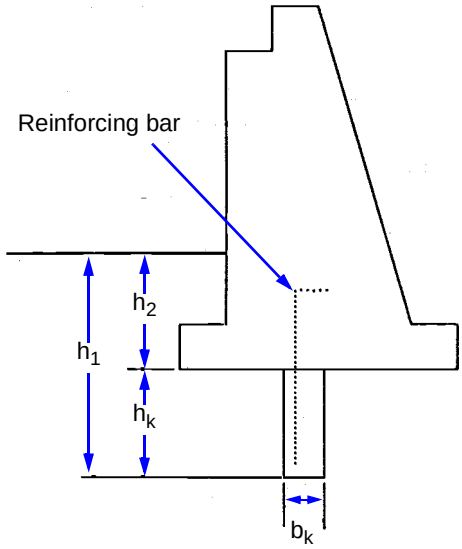

LEGEND:

h_1 = passive force
h_2 = original passive-force height
h_k = height of key
b_k = width of key

Figure 7-14. Abutment Key

- **Compute the dimensions.** If necessary, choose and modify the preliminary key dimensions as follows:

$$h_k \approx \frac{h_a}{4} \quad (7\text{-}26)$$

where—

h_k = *key height, in feet*
h_a = *abutment height, in feet*

and—

$$b_k \approx \frac{h_k}{3} \quad (7\text{-}27)$$

where—

b_k = *key width, in feet (greater than or equal to 1 foot)*
h_k = *key height, in feet*

- **Reinforce the key to prevent failure due to concrete stresses.** Use No. 4 bars with 1-foot, center-to-center spacing. Extend the bars 1 foot into the body of the abutment. Use a concrete cover (minimum of 3 inches) over the reinforcing steel.

- **Modify the design.** If placing the abutment on piles, design the piles to carry the full load (including the abutment weight). *Paragraph 7-100* describes pile foundations.

Soil Bearing Capacity

7-37. Determine the allowable soil bearing capacity for the specific site, if possible. Otherwise, use *Appendix H* to estimate the soil bearing capacity. The criteria for proper soil bearing capacity are the—

- Eccentric distance is less than or equal to one-sixth the abutment width for all three cases.
- Minimum pressure of eccentricity is less than or equal to the soil bearing capacity for Case III.

7-38. **Eccentric Distance.** Since horizontal and vertical forces act on an abutment, the pressure it exerts on the soil varies. The resultant force due to soil pressure acts at an eccentric distance from the geometric center of the abutment.

7-39. Compute the eccentric distance as follows:

$$e = \frac{b_a}{2} - \frac{\Sigma M_r - \Sigma M_o}{\Sigma p} \quad (7\text{-}28)$$

where—

e = *eccentric distance, in feet*

b_a = *abutment width, in feet*

ΣM_r = *total of all resisting moments for the specific case, in kip-feet (Figure 7-12, page 7-12)*

ΣM_o = *total of all overturning moments for a specific case, in kip-feet (Figure 7-12)*

ΣP = *total of the vertical forces acting downward for a specific case, in kips (Figure 7-12)*

7-40. If the sign of the eccentric distance is positive, the resultant force is to the left of the centerline and maximum pressure occurs at the toe *(Figure 7-15A, page 7-20).* If the sign of the eccentric distance is negative, the resultant force is to the right of the centerline and maximum pressure occurs at the heel *(Figure 7-15B).*

7-41. **Load Eccentricity.** The resultant force must be within the middle third of the abutment. If the eccentric distance is less than one-sixth of the abutment width, the resultant force is within the middle third of the abutment. If the eccentric distance is greater than one-sixth of the abutment width, the resultant force is outside the middle third, indicating that the soil is in tension *(Figure 7-16, page 7-20).* However, since soil cannot take tension, the resultant load is spread over a smaller area, which increases the maximum pressure and possibly leads to failure. Determine the eccentricity of load for each loading case to ensure that the eccentric distance is less than or equal to one-sixth of the abutment width. To correct excessive load eccentricity, increase the toe or heel length so that the eccentric distance is within the middle third of the abutment.

7-42. **Maximum Soil Pressure.** The maximum soil pressure must not exceed the allowable soil bearing capacity. Determine the maximum pressure for Case III only, since the worst loading condition occurs for this case.

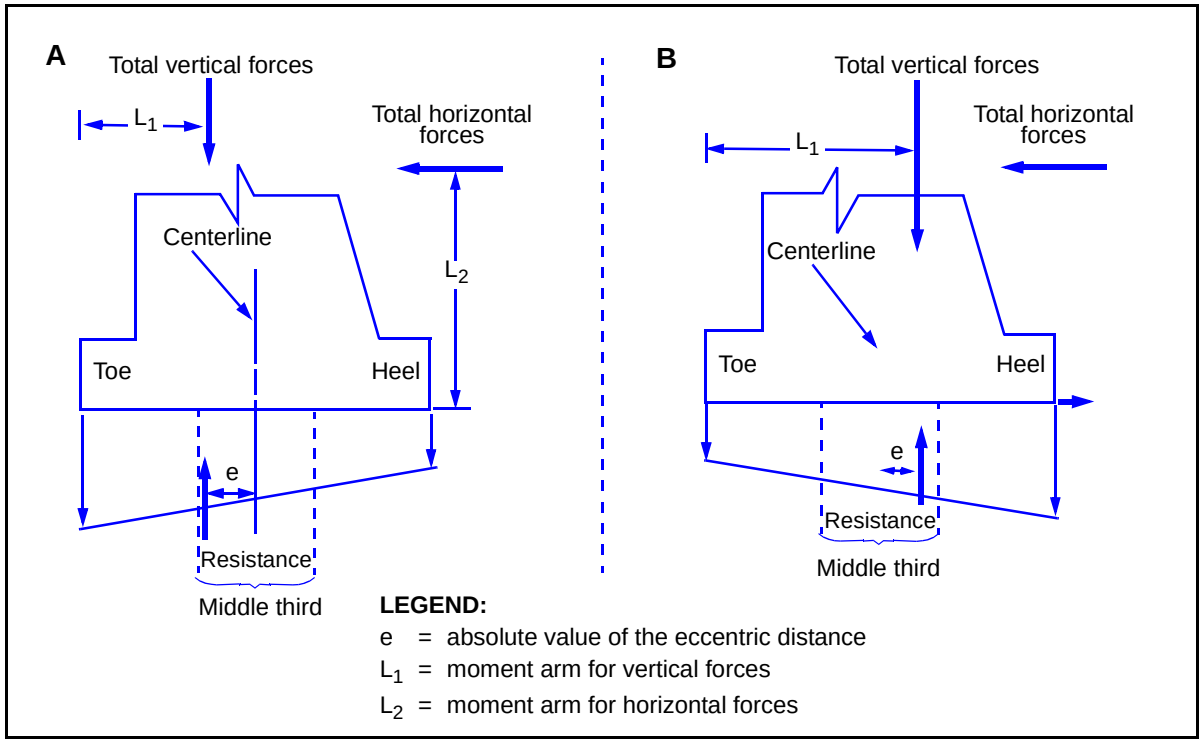

Figure 7-15. Eccentric Distance

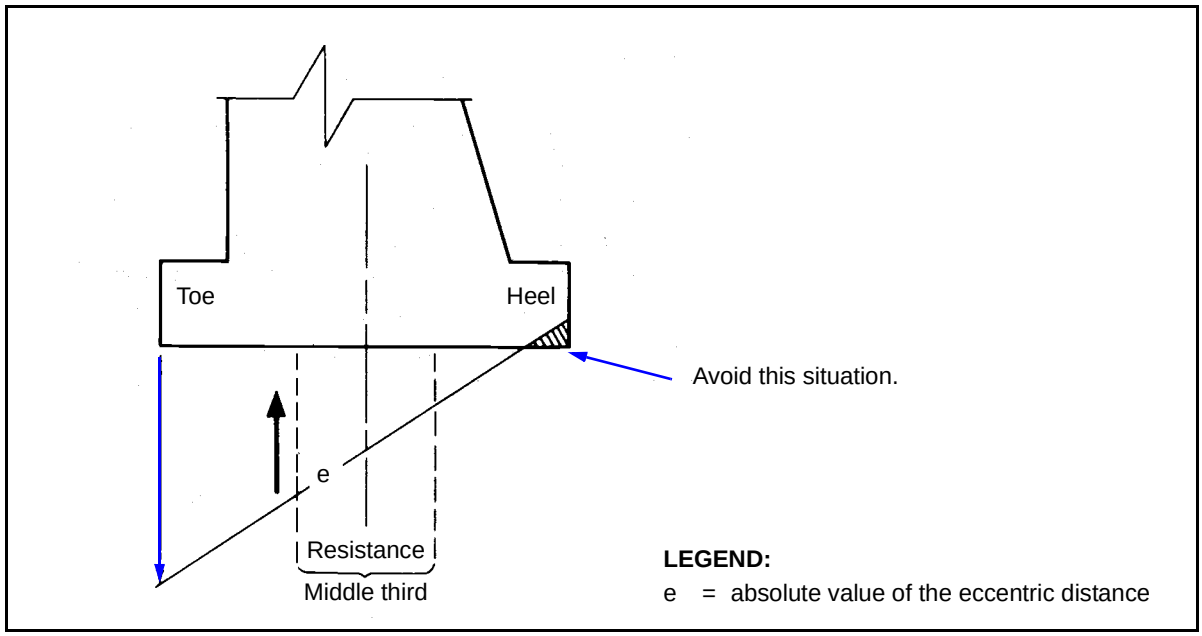

Figure 7-16. Eccentricity Outside the Middle Third of the Abutment

Compute the maximum pressure for eccentricity within the middle third of the abutment as follows:

$$P_{mx} = \frac{\Sigma P}{b_a}\left(1 + \frac{6_e}{b_a}\right) \quad (7\text{-}29)$$

where—

P_{mx} = *maximum pressure exerted on the soil, in ksf*
ΣP = *total of the vertical loads, in kips (paragraph 7-2)*
e = *absolute value of the eccentric distance, in feet (equation 7-28)*
b_a = *abutment width, in feet*

7-43. **Minimum Soil Pressure.** Compute the minimum soil pressure for eccentricity within the middle third of the abutment as follows:

$$P_{mn} = \frac{\Sigma P}{b_a}\left(1 - \frac{6_e}{b_a}\right) \quad (7\text{-}30)$$

where—

P_{mn} = *minimum pressure exerted on the soil, in ksf*
ΣP = *total of the vertical loads, in kips (paragraph 7-2)*
e = *absolute value of the eccentric distance, in feet (equation 7-28)*
b_a = *abutment width, in feet*

Soil Shear Failure

7-44. Soil shear failure is a landslide-type failure involving the abutment and the mass of earth under and behind the abutment. *Figure 7-17* shows typical soil shear failure. The primary causes of soil shear failure are—

- The slope in front of the abutment is too steep.
- Scour occurs under the abutment.
- The backfill is saturated with water or eroded from the sides of the abutment.

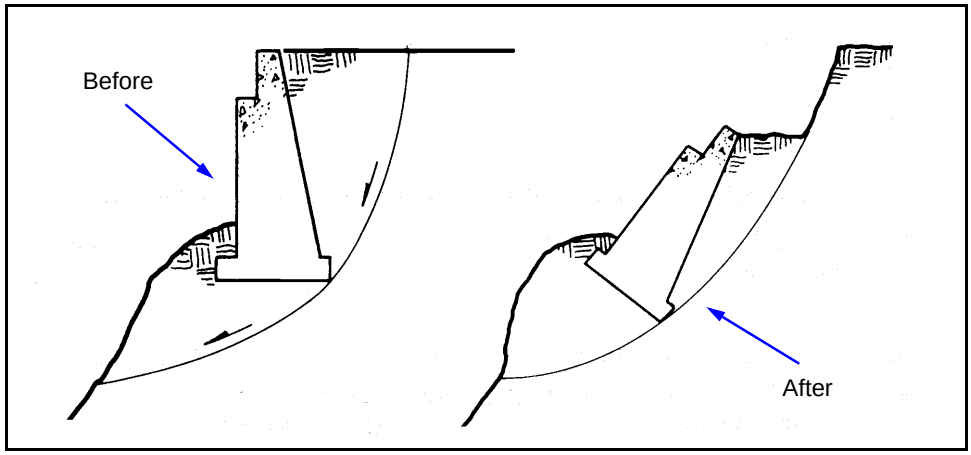

Figure 7-17. Soil Shear Failure

7-45. To prevent soil shear failure, ensure that the slope in front of the abutment is no more than 45 degrees and preferably less than 35 degrees *(Figure 7-18A)*. Place riprap in front of the abutment to prevent scour. If riprap is not available or the slope cannot be made less than 45 degrees, drive sheet piles in front of the abutment. The sheet piles must extend below the bottom of the gap and be anchored near the top with a deadman *(Figure 7-18B)*. The abutment can be placed on friction or bearing piles. Backfill the abutment with sand and gravel and install weep holes for drainage. Protect weep holes with a filter. Also, install granular material under the abutment, especially if the soil contains clay. Install wing walls to prevent erosion of the earth from the sides of the abutment *(Figure 7-18C)*.

Concrete Failure

7-46. *Figure 7-19, page 7-24*, shows the critical sections in a mass-concrete abutment. Section A-A is especially critical because Point C is subject to vehicle impact loads if the backfill settles. To prevent failure, reinforce Section A-A with steel bars *(Figure 7-20, page 7-24)*. See *Figure 7-21, page 7-25*, for concrete-stress checkpoints.

REINFORCED CONCRETE ABUTMENT

7-47. Use reinforced concrete abutments if economy of materials is desired. Concrete abutments are subject to the same types of failure as other abutments. Preventing failure (except for concrete failure) requires the same procedures as for mass-concrete abutments. *Figure 7-22, page 7-25*, shows a typical reinforced concrete abutment. Check Sections A-A, B-B, D-D, and E-E for potential failure. Follow the procedures discussed below when designing reinforced concrete abutments.

Dimensions

7-48. Local soil conditions govern the abutment height. Choose a height that allows the footing to rest on firm soil. Choose the other dimensions using the following limits (check all critical sections for safety after choosing the dimensions):

- The curb-to-curb roadway width is less than the abutment length, and the abutment length is less than the roadway width plus 4 feet.
- The abutment width is 50 to 70 percent of the abutment height.
- The stem width is 15 percent of the abutment height.
- The toe and heel heights are 10 percent of the abutment height.
- The seat width is greater than or equal to the cap or sill width, and the cap or sill width is greater than or equal to ¾ foot.
- The superstructure depth is measured from the bottom of the bearing plate to the top of the deck.
- The toe width is 10 percent of the abutment height.

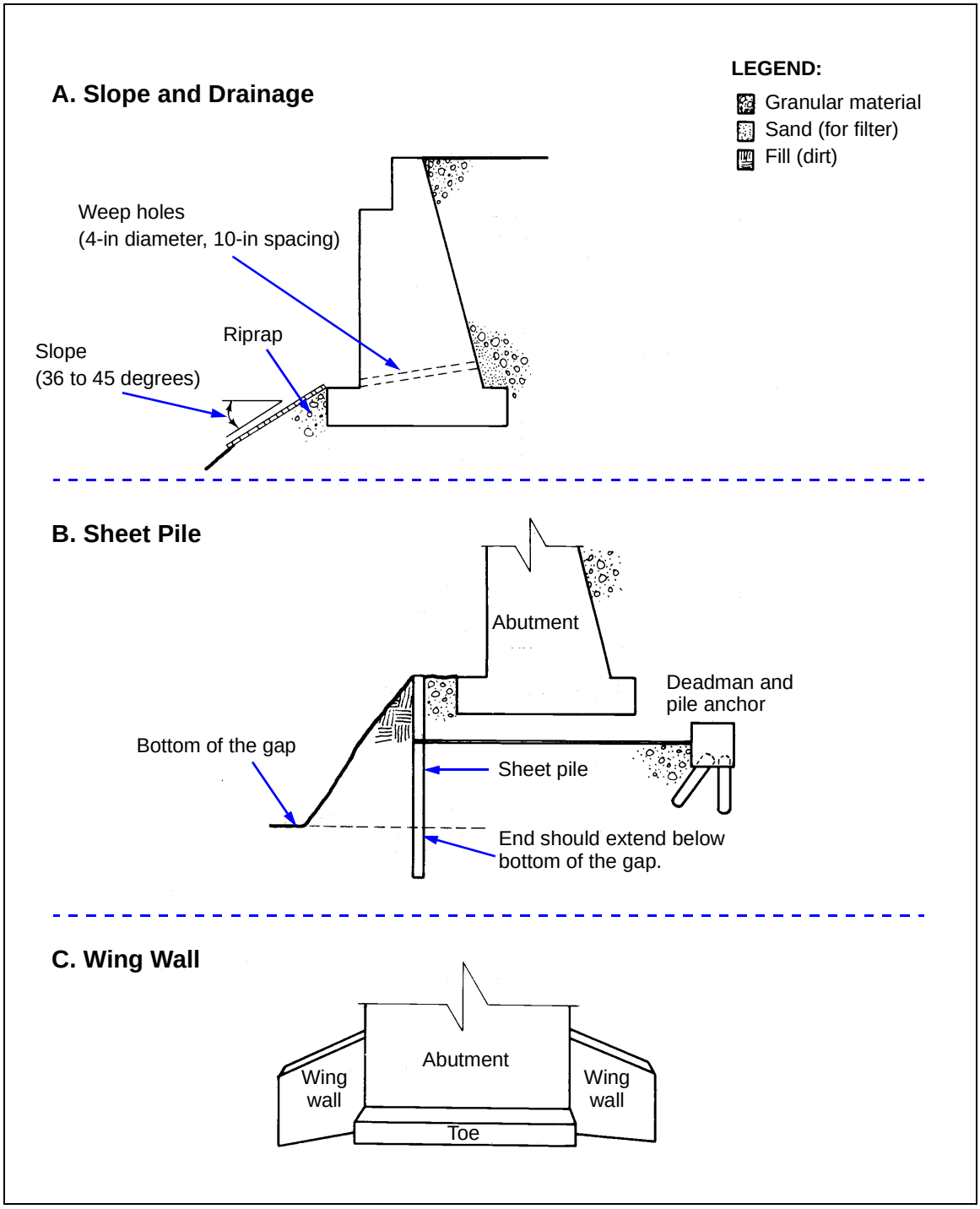

Figure 7-18. Preventing Soil Shear Failure

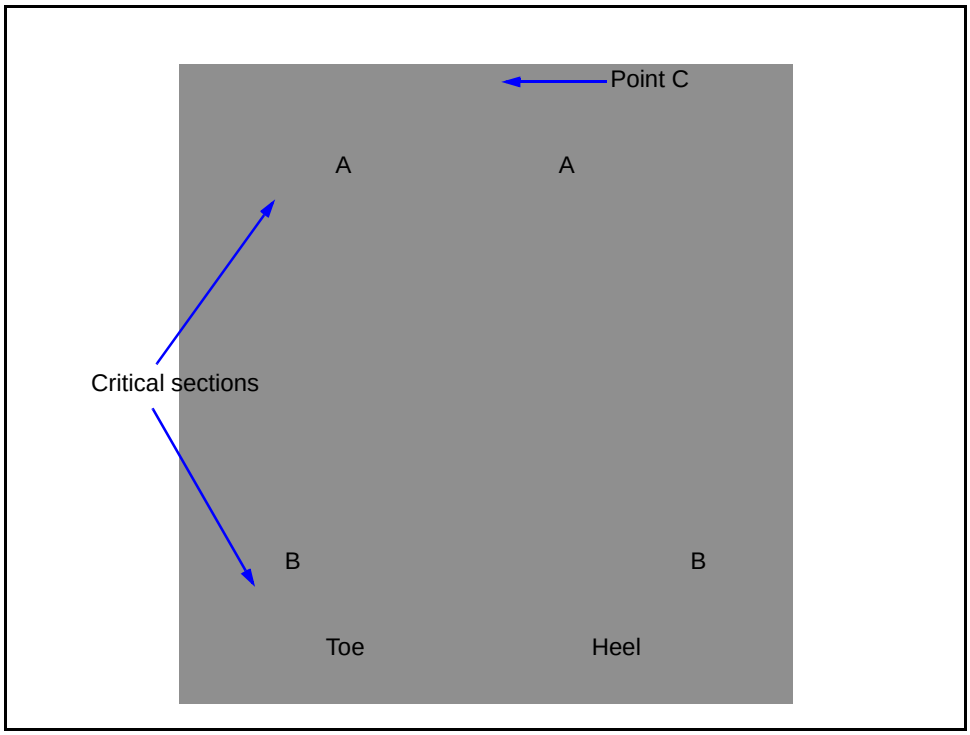

Figure 7-19. Critical Sections in a Mass-Concrete Abutment

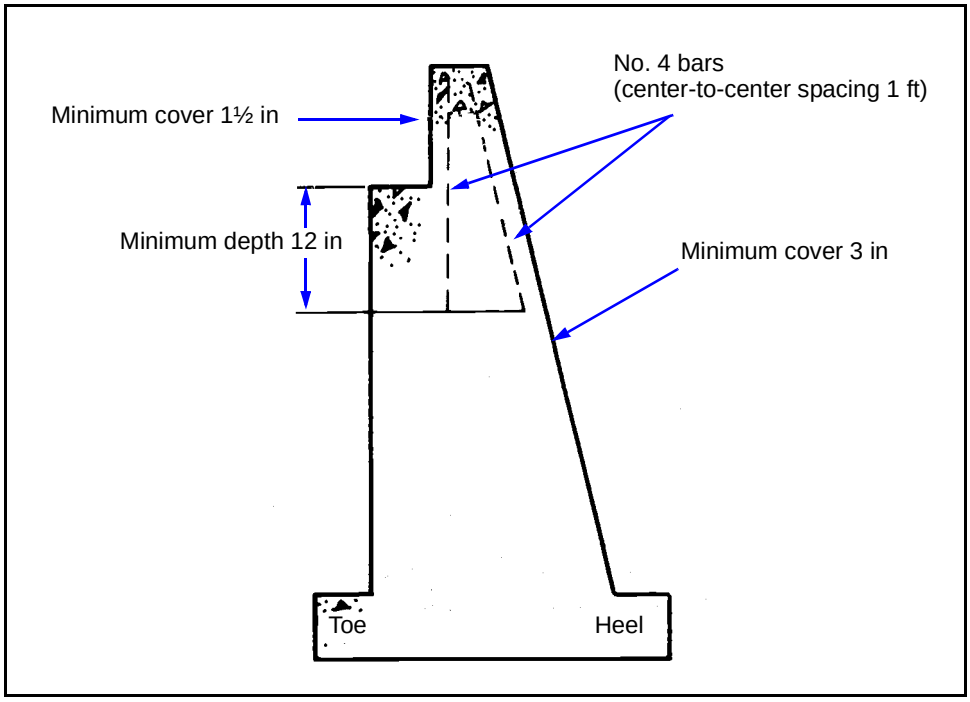

Figure 7-20. Reinforcement of Section A-A

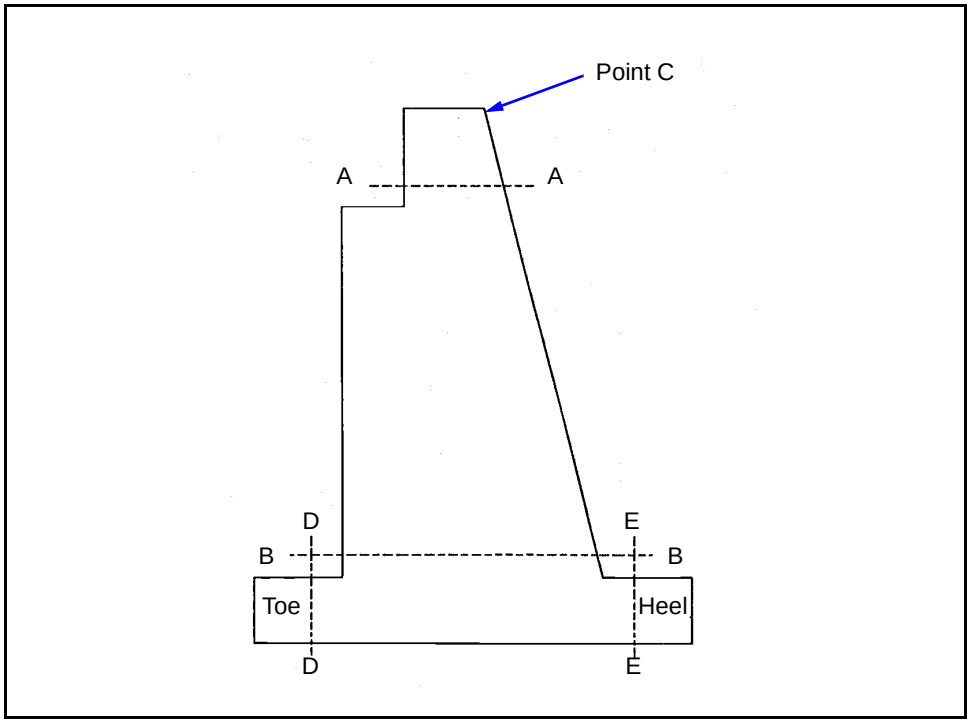

Figure 7-21. Concrete-Stress Checkpoints

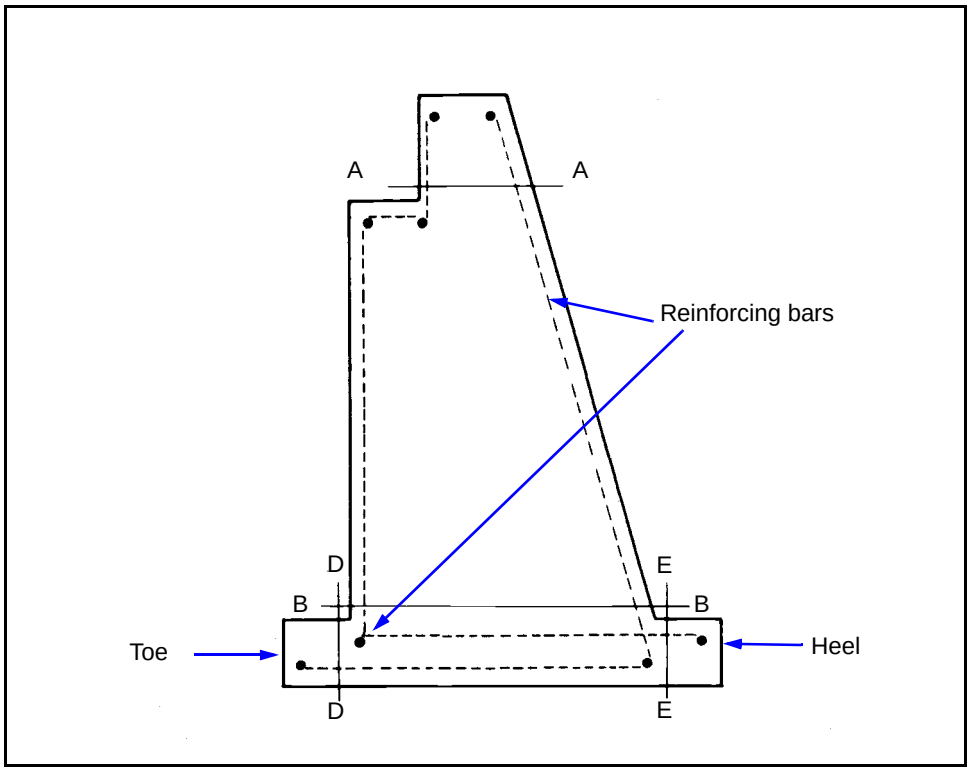

Figure 7-22. Reinforced Concrete Abutment With Critical Cross Sections

Loading Case Values

7-49. Using the preliminary dimensions outlined above, determine the vertical and horizontal abutment loads using the methods described in *paragraphs 7-2* and *7-8*. Determine the soil pressure at Points A and D *(Figure 7-23)* using the methods in *paragraphs 7-42* and *7-43*. The maximum pressure of eccentricity must be less than or equal to the soil bearing capacity, and the minimum pressure of eccentricity must be greater than zero for all loading cases.

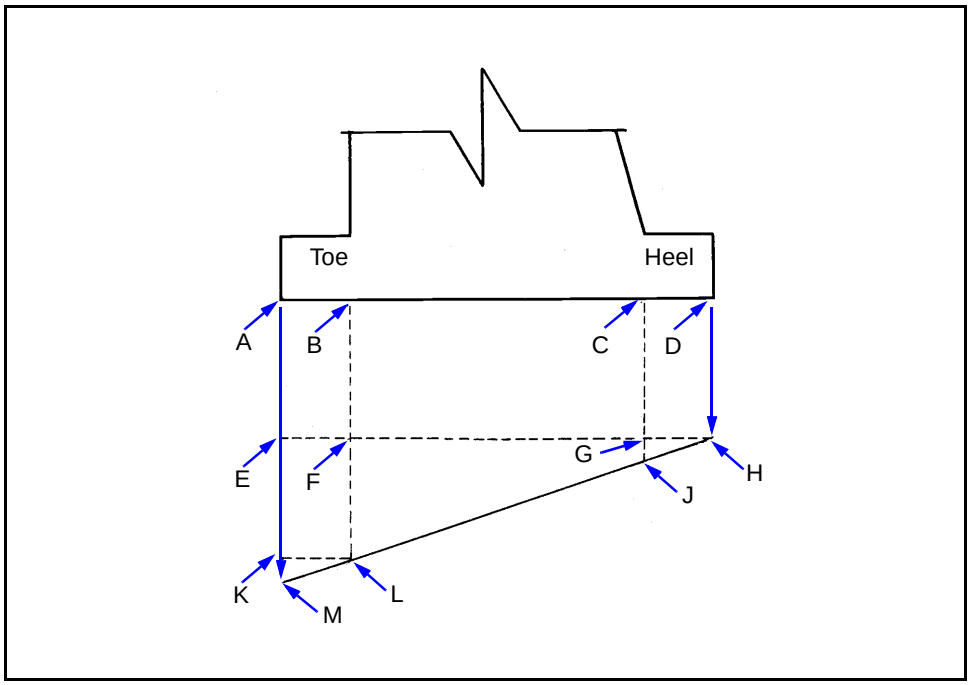

Figure 7-23. Soil-Pressure Points

Shear and Moment

7-50. Determine the shear force and moment as shown below. Each section is computed separately.

7-51. **Sections A-A and B-B.** Determine the shear force and the moment for Sections A-A and B-B *(Figure 7-22, page 7-25*) using the equation below. For Sections A-A and B-B, consider only that portion of the surcharge force plus the backfill force that acts at or above the respective section.

- **Shear force.**

$$V = H_s + H_b \qquad (7\text{-}31)$$

where—

V = *shear force of Section A-A or B-B, in kpf*

H_s = *horizontal surcharge force above either Section A-A or B-B, in kpf (equation 7-9)*

H_b = *horizontal backfill force above either Section A-A or B-B, in kpf (equation 7-10)*

- **Moment.**

$$M = Ve \quad (7\text{-}32)$$

where—

M = *total moment of Section A-A or B-B, in kip-feet per foot (Figure 7-22)*
V = *total of the shear forces, in kpf (equation 7-31)*
e = *eccentric distance, in feet (equation 7-28)*

7-52. **Section D-D.** The shear force at Section D-D *(Figure 7-22*) is the total of the forces exerted at the centroid of the rectangle ABLK and the triangle KLM in *Figure 7-23*. Compute for shear force and moment as follows:

- **Shear force.**

$$V_1 = P_{mn}b_t + (P_{mx} - P_{mn})\left(\frac{b_a - b_t}{b_a}\right)(b_t) \; @ \; \frac{b_t}{2} \quad (7\text{-}33)$$

and—

$$V_2 = (P_{mx} - P_{mn})\left(\frac{b_t}{b_a}\right)\left(\frac{b_t}{2}\right) \; @ \; \frac{2b_t}{3} \quad (7\text{-}34)$$

where—

V_1 = *shear force exerted by the rectangle ABLK, in kpf*
P_{mn} = *minimum pressure on the soil, in ksf (equation 7-30)*
b_t = *toe width, in feet*
P_{mx} = *maximum pressure on the soil, in ksf (equation 7-29)*
b_a = *abutment width, in feet*
V_2 = *shear force exerted by the triangle KLM, in kpf*

- **Moment.**

$$M = V_1\left(\frac{b_t}{2}\right) + V_2\left(\frac{2b_t}{3}\right) \quad (7\text{-}35)$$

where—

M = *total moment of Section D-D, in kip-feet per foot*
V_1 = *shear force exerted by the rectangle ABLK, in kpf (equation 7-33)*
b_t = *toe width, in feet*
V_2 = *shear force exerted by the triangle KLM, in kpf (equation 7-34)*

7-53. **Section E-E.** The shear force at Section E-E *(Figure 7-22*), resulting in tension at the bottom of the slab, is the weight of the soil plus the surcharge above the heel and the weight of the heel minus the forces exerted at the

centroid by the rectangle CDHG and the triangle GHJ. Compute for shear force and moment as follows:

- **Shear force.**

$$V_1 = P_{mn} b_h \quad (7\text{-}36)$$

and—

$$V_2 = (P_{mx} - P_{mn})\left(\frac{b_h}{b_a}\right)\left(\frac{b_h}{2}\right) \quad (7\text{-}37)$$

where—

V_1 = *shear force exerted by the rectangle CDHG, in kpf*
P_{mn} = *minimum pressure on the soil, in ksf (equation 7-30)*
b_h = *heel width, in feet*
V_2 = *shear force exerted by the triangle GHJ, in kpf*
P_{mx} = *maximum pressure on the soil, in ksf (equation 7-29)*
b_a = *abutment width, in feet*

- **Moment.**

$$M = V_1\left(\frac{b_h}{2}\right) + V_2\left(\frac{b_h}{3}\right) \quad (7\text{-}38)$$

where—

M = *total moment of Section E-E, in kip-feet per foot*
V_1 = *shear force exerted by the rectangle CDHG, in kpf (equation 7-36)*
b_h = *heel width, in feet*
V_2 = *shear force exerted by the triangle GHJ, in kpf (equation 7-37)*

Critical Sections

7-54. The design procedure for critical sections corresponds to the procedure used for flat slabs with reinforcement in one direction. Base the design on a 1-foot-wide section. At each critical section, check for moment, shear, and bond (between steel and concrete). Assume that there are 10 stringers and that the ultimate compressive stress is 3 ksi, the allowable concrete stress is 1.35 ksi, and the allowable steel stress is 24 ksi. Compute as follows:

- **Required section depth.**

$$d_{req} = 2.16\sqrt{M} \quad (7\text{-}39)$$

where—

d_{req} = *required section depth, in inches (round to the next higher whole inch)*
M = *design moment, in kip-feet per foot (equation 7-32, 7-35, or 7-38)*

- **Required steel area.** The total depth of Section E-E *(Figure 7-22, page 7-25)* is the required section depth plus 3 inches. This depth

provides protection for the reinforcing steel. Once the steel area is known, choose the bar sizes from *Appendix D*.

$$A = \frac{M}{1.76d} \quad (7\text{-}40)$$

where—

A = *required steel area, in square inches*
M = *moment at any critical section of abutment (in 1-foot-wide sections), in kip-feet (equation 7-32, 7-35, or 7-38)*
d = *actual abutment depth, in inches*

- **Actual shear stress.** If the actual shear stress is critical, increase the required section depth to decrease the shear stress. Ensure that the actual shear stress does not exceed the allowable shear stress (0.09 ksi).

$$f_v = \frac{V}{10.5d_{req}} \quad (7\text{-}41)$$

where—

f_v = *actual shear stress, in ksi*
V = *total shear force at the critical section, in kpf (paragraph 7-51)*
d_{req} = *required section depth, in inches (equation 7-39)*

- **Bond stress.** Check the bond stress of the reinforcing bars against the allowable bond stress (0.03 ksi). Compute as follows:

$$f_o = \frac{V}{\Sigma_O(0.875d_{req})} \quad (7\text{-}42)$$

where—

f_o = *allowable bond stress, in ksi*
V = *total shear at the critical section, in kpf (paragraph 7-51)*
Σ_o = *sum of all the perimeters of the reinforcing bar, in inches (Table D-5, page D-5)*
d_{req} = *required section depth, in inches (equation 7-39)*

Sliding and Overturning

7-55. Use the methods described in *paragraphs 7-29* and *7-30* to check for sliding and overturning. If either sliding or overturning presents a problem, increase the heel width to increase the total weight of soil over the heel. Also use the measures described in *paragraph 7-31* to prevent sliding and overturning. If the safety factors for both sliding and overturning are much larger than required and the soil bearing capacity is more than adequate, decrease the size of the originally designed abutment to provide a more economical design.

Soil Shear Failure

7-56. Apply the measures described in *paragraph 7-44* to reinforced concrete abutments. This will prevent soil shear failure.

RETAINING WALLS

7-57. Design retaining walls the same as abutments, but do not apply superstructure dead and live loads to the top of the retaining walls. Retaining walls may be concrete (mass or reinforced), timber, or steel sheet piles.

DEADMAN DESIGN

7-58. Use a deadman as a means of preventing sliding and overturning. Place the deadman outside the natural angle of repose of the soil. A setback equal to 150 percent of the abutment height is sufficient. Anchor the cables or steel tie rods by casting them into the body of the concrete abutment as shown in *Figure 7-24*. If the bridge is constructed of piles or posts, bolt the cables or tie rods to the abutment as shown in *Figure 7-25*. Position the cables or tie rods horizontally between the abutment and the deadman. The cover over the cables should be three times the deadman's depth dimension or the depth of the covered stem plus 1 foot, whichever is greater.

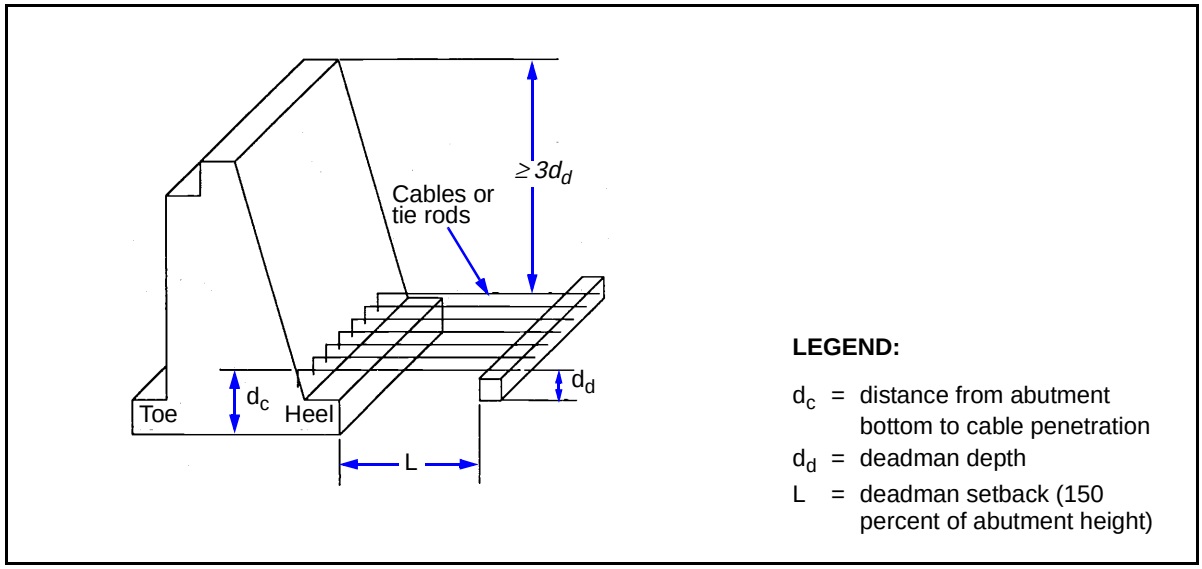

Figure 7-24. Deadman Connection, Cover, and Setback

Sliding

7-59. Use *equation 7-23* to check for sliding on a concrete abutment. If the safety factor is less than 1.5, design a deadman as follows:

- **Concrete or footing-type abutment.**
  - Compute the horizontal force acting on the abutment as follows:

$$\Sigma H_M = \frac{\Sigma P K_f L_a}{1.5} \qquad (7\text{-}43)$$

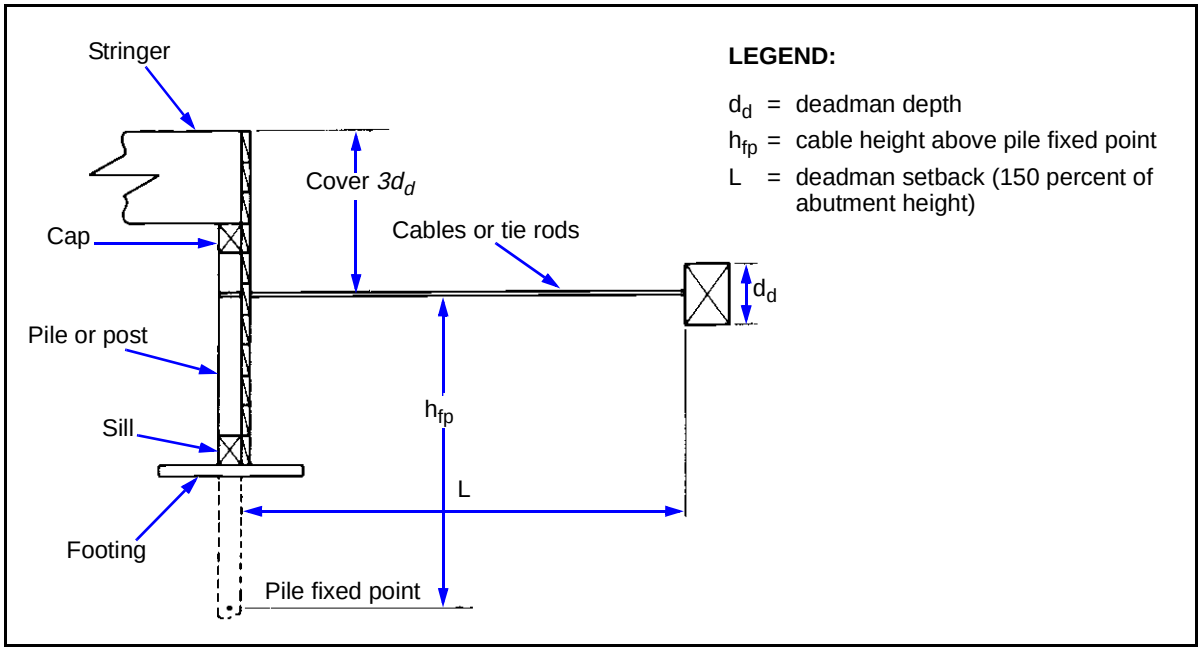

Figure 7-25. Deadman Installation on a Pile or Post Abutment

where—

ΣH_M = *maximum horizontal force acting on the abutment, in kips*
ΣP = *total of the vertical loads, in kpf (paragraph 7-2)*
K_f = *friction coefficient (Table H-2, page H-2)*
L_a = *abutment length, in feet (Figure 7-13, page 7-16)*

- Compute the horizontal force that the deadman must resist as follows:

$$H'_d = \Sigma H - \Sigma H_M \qquad (7\text{-}44)$$

where—

H'_d = *horizontal force that the deadman must resist, in kips*
ΣH = *total of the horizontal forces acting on the abutment, in kpf (paragraph 7-8)*
ΣH_M = *maximum horizontal forces acting on the abutment, in kips (equation 7-43)*

- Use a safety factor of 1.5 to determine the capacity of the deadman to resist horizontal forces. Compute as follows:

$$H_d = 1.5H'_d \qquad (7\text{-}45)$$

where—

H_d = *horizontal-force capacity of the deadman, with safety factor, in kips*

H'_d = *horizontal force that the deadman must resist, in kips*

- **Pile abutment.**
  - Compute the allowable shear capacity per pile as follows:

$$h_{av} = F_v A_v \quad (7\text{-}46)$$

where—

h_{av} = *allowable horizontal shear capacity of the pile, in kips*
F_v = *allowable shear stress, in ksi (Table C-1, pages C-3 through C-6)*
A_v = *effective shear area per pile, in square inches (Table C-4, page C-9)*

  - Compute the total horizontal force resisting shear as follows:

$$H_{av} = Nh_{av} \quad (7\text{-}47)$$

where—

H_{av} = *total horizontal force resisting shear, in kips*
N = *number of piles in the bent*
h_{av} = *horizontal shear capacity of the pile, in kips (equation 7-46)*

  - Compute the horizontal force that the deadman must resist, in *equations 7-44* and *7-45*, substituting H_{av} for ΣH_M.

Overturning

7-60. Use *equation 7-24* to compute the safety factor for overturning. If it is less than two, design the abutment as follows:

- **Compute the concrete or footing-type abutment.**

$$\Sigma M_r = 2\Sigma M_o \quad (7\text{-}48)$$

where—

ΣM_r = *minimum resisting moment of the abutment, in kips*
ΣM_o = *total of the overturning moments of the abutment sections, in kips (Figure 7-12, page 7-12)*

- **Compute the pile abutment.**

$$M_r = \frac{N_p F_b S}{12} \quad (7\text{-}49)$$

where—

M_r = *minimum resisting moment per pile, in kip-feet*
N_p = *number of piles*
F_b = *allowable bending stress per pile, in ksi (Table C-1)*
S = *section modulus of the pile, in cubic inches (Table C-5, page C-10)*

7-61. Design the deadman to resist the horizontal shear force, including a safety factor of two. Design the deadman to resist the larger force required for sliding and overturning. Compute as follows:

- **Concrete.**

$$H_d = 2\left[\frac{L_a(\Sigma M_r - \Sigma M_o)}{h}\right] \quad (7\text{-}50)$$

where—

H_d = *concrete capacity of the deadman to resist horizontal shear, in kips*
L_a = *abutment length, in feet*
M_r = *minimum resisting moment of the abutment, in kip-feet (equation 7-48)*
M_o = *total of section moments, in kip-feet per foot (Figure 7-12)*
h = *distance from the cable to the bottom of the abutment, in feet (Figures 7-24 and 7-25, pages 7-30 and 7-31)*

- **Piles.**

$$H_d = 2\left[\frac{N(\Sigma M_r - \Sigma M_o)}{h}\right] \quad (7\text{-}51)$$

where—

H_d = *pile capacity of the deadman to resist horizontal shear, in kips*
N = *number of piles*
M_r = *minimum resisting moment per pile, in kip-feet (equation 7-49)*
M_o = *overturning moment, in kip-feet (Case III, paragraphs 7-2 through 7-17 and Figure 7-12)*
h = *distance from the cable to the bottom of the abutment, in feet (Figures 7-24 and 7-25)*

Deadman Specifications

7-62. **Length and Depth.** The deadman length normally equals the abutment length. Compute the required structural depth of the deadman as follows:

$$d_d = \frac{H_d}{L_d F_s} \quad (7\text{-}52)$$

where—

d_d = *required structural deadman depth, in feet*
H_d = *capacity of the deadman needed to resist horizontal forces, in kips (larger of equations 7-45 and 7-50 or 7-51)*
L_d = *deadman length, in feet*
F_s = *allowable soil bearing capacity, in ksf (Table H-1, page H-1)*

7-63. **Number of Cables.** Compute the number of cables using the equation below. If using steel rods instead of cables, use the same equation but substitute the rod strength *(rod area x 29 ksi)* for the allowable rod strength.

$$N = \frac{H_d}{T} \quad (7\text{-}53)$$

where—

N = *number of cables*
H_d = *capacity of the deadman needed to resist horizontal forces, in kips (larger of equations 7-45 and 7-50 or 7-51)*
T = *allowable cable tensile strength, in kips (16 ksi x the square of the cable diameter)*

7-64. **Cable or Rod Spacing.** Compute the proper spacing and deadman width as follows:

- **Spacing.**

$$S_{cr} = \frac{b_R}{N} - 1 \quad (7\text{-}54)$$

where—

S_{cr} = *cable or rod spacing, in feet*
b_R = *curb-to-curb roadway width, in feet (equation 7-14)*
N = *number of cables or rods*

- **Width.**

$$b_w = \frac{S_{cr}}{5} \quad (7\text{-}55)$$

where—

b_w = *deadman width, in feet*
S_{cr} = *cable or rod spacing, in feet (equation 7-54)*

7-65. **Cable Protection.** After installation, coat the cables or rods with tar to protect them from rust. Treat the deadman for protection against decay.

INTERMEDIATE-SUPPORT DESIGN

VERTICAL PIER LOADS

7-66. Vertical pier loads include dead and live loads, pier weight, soil forces, and buoyancy forces. The dead load acts vertically through the centerline of the support.

Dead Load

7-67. Compute the dead load of the pier as follows:

$$P_{DL} = \left(\frac{W'_{DL1}L_1}{2}\right)\left(\frac{W'_{DL2}L_2}{2}\right) \quad (7\text{-}56)$$

where—

P_{DL} = *dead load of the pier, in kips*
W'_{DL1} = *dead-load weight per foot of span 1, in kpf (equation 6-43)*
L_1 = *length of span 1, in feet*
W'_{DL2} = *dead-load weight per foot of span 2, in kpf (equation 6-43)*
L_2 = *length of span 2, in feet*

Live Load

7-68. Compute the live load of the pier as follows:

$$P_{LL} = V_{LL}N \quad (7\text{-}57)$$

where—

P_{LL} = *live load of pier, in kips*
V_{LL} = *maximum live-load shear, in kips (Use the larger value from Figure B-3 or B-4, pages B-17 and B-18. Use the combined span length for determining the shear value in the figures.)*
N = *number of lanes*

7-69. Note that the two span lengths resting on the pier are added, and the live-load shear is found for the combined span lengths. Impact is not included in this load. The live load acts vertically through the centerline of the pier.

Pier Weight

7-70. The weight of timber- or steel-framed piers is negligible. However, include the weight of a concrete pier in the substructure design. Determine the concrete-pier weight from known or assumed dimensions. *Figure 7-26, page 7-36,* shows a typical concrete pier (with dimensions). The forces of the stem and footing weights act vertically through the pier centerline.

7-71. **Stem Weight.** Compute the stem weight as follows:

$$W_s = L_s b_{as} h_{as} u \quad (7\text{-}58)$$

where—

W_s = *stem weight, in kips*
L_s = *stem length, in feet*
b_{as} = *stem width, in feet*
h_{as} = *stem height, in feet*
u = *unit weight of the stem material, in kips per cubic foot (concrete weighs 0.15 kips per cubic foot)*

7-72. **Footing Weight.** Compute the footing weight using *equation 7-58*. Substitute the footing dimensions for the stem dimensions.

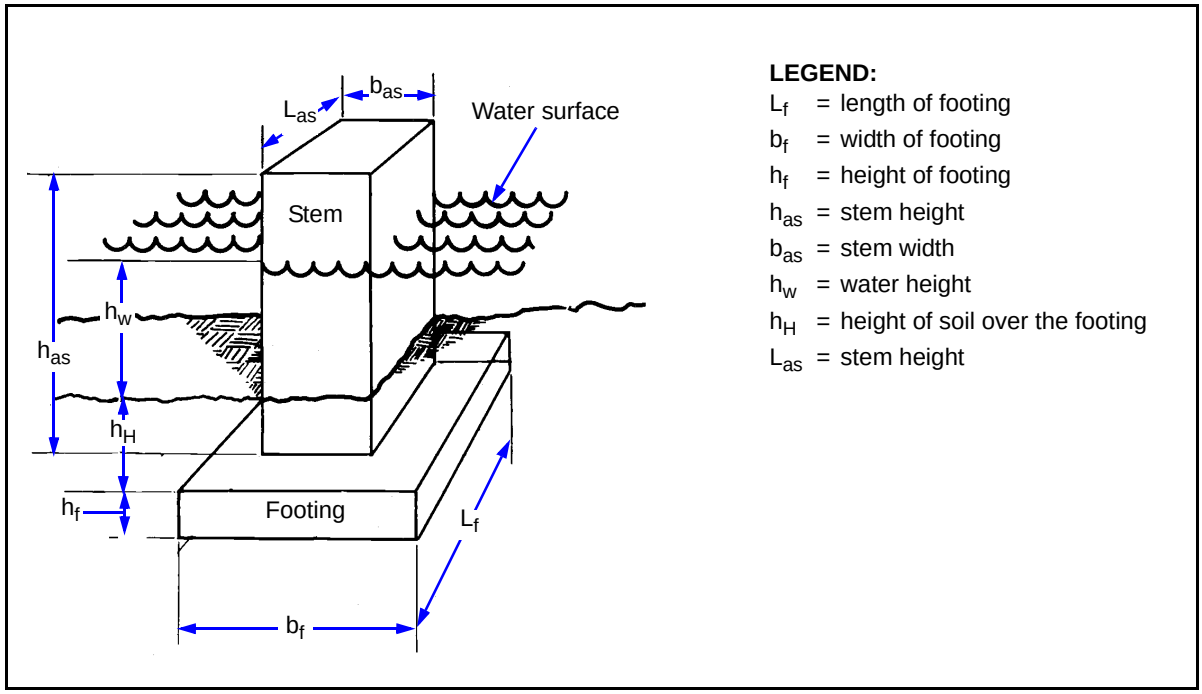

Figure 7-26. Typical Concrete Pier

Soil Forces

7-73. If there is a layer of soil over the footing, include the weight of the soil in the vertical pier load. Compute the soil weight over the pier (as shown in *Figure 7-26)* as follows:

$$W_k = (A_f - A)h_H u \qquad (7\text{-}59)$$

where—

W_k = *soil weight, in kips*
A_f = *footing area, in square feet*
A = *stem area, in square feet*
h_H = *height of the soil over the footing, in feet (Figure 7-26)*
u = *unit weight of the soil, in kips per cubic foot (Table H-1, page H-1)*

7-74. If the stem is steel H-sections, the area of the steel is negligible. If the stem is timber, compute the soil weight as follows:

$$W_k = (A_f - A_t)h_H u \qquad (7\text{-}60)$$

where—

W_k = *soil weight, in kips*
A_f = *footing area, in square feet*
A_t = *planned area of the timber over the footing, in square feet*
h_H = *height of the soil over the footing, in feet (Figure 7-26)*
u = *unit weight of the soil, in kips per cubic foot (Table H-1)*

Buoyancy Forces

7-75. If the pier is partially submerged *(Figure 7-26)*, the water creates buoyancy forces on the submerged parts of the pier. The buoyancy force on any part is simply the volume of that part below water multiplied by the unit weight of water. Buoyancy forces for steel or timber piers are negligible. Compute for the buoyancy force acting on the pier stem as follows:

$$F_{os} = [A(h_w + h_H)]u \quad (7\text{-}61)$$

where—

F_{os} = *buoyancy force acting on the stem, in kips*
A = *stem area, in square feet*
h_w = *water depth, in feet*
h_H = *height of the soil in contact with the stem, in feet (Figure 7-26)*
u = *unit weight of water, in kips per cubic foot (salt water is 0.064 and freshwater is 0.0624)*

7-76. Similarly, the buoyancy forces acting on the footing and soil are computed as follows:

$$F_{of} = L_f b_f h_f u \quad (7\text{-}62)$$

where—

F_{of} = *buoyancy force acting on the footing, in kips*
L_f = *footing length, in feet*
b_f = *footing width, in feet*
h_f = *submerged footing height, in feet*
u = *unit weight of water, in kips per cubic foot (salt water is 0.064 and freshwater is 0.0624)*

and—

$$F_{ok} = (A_f - A)du \quad (7\text{-}63)$$

where—

F_{ok} = *buoyancy force acting on the soil, in kips*
A_f = *footing area, in square feet*
A = *stem area, in square feet*
d = *submerged soil depth over footing, in feet (Figure 7-26)*
u = *unit weight of water, in kips per cubic foot (salt water is 0.064 and freshwater is 0.0624)*

Total Vertical Pier Load

7-77. The total vertical pier load is the sum of all vertical loads minus the buoyancy forces. For the pier shown in *Figure 7-26*, the total vertical load is as follows:

$$P = P_{DL} + P_{LL} + W_s + W_f + W_k - (F_{os} + F_{of} + F_{ok}) \quad (7\text{-}64)$$

where—

P = *total vertical pier load, in kips*
P_{DL} = *dead load of the pier, in kips (equation 7-56)*
P_{LL} = *live load of the pier, in kips (equation 7-57)*
W_s = *stem weight, in kips (equation 7-58)*
W_f = *footing weight, in kips (paragraph 7-72)*
W_k = *soil weight, in kips (equation 7-59 or 7-60)*
F_{os} = *buoyancy force acting on the stem, in kips (equation 7-61)*
F_{of} = *buoyancy force acting on the footing, in kips (equation 7-62)*
F_{ok} = *buoyancy force acting on the soil, in kips (equation 7-63)*

LONGITUDINAL LOADS

7-78. The only longitudinal load considered in pier design is the vehicular longitudinal force. *Paragraph 7-12* describes how to determine the number of vehicles per lane.

LATERAL LOADS

Wind Load

7-79. Determine the wind force as follows:

- **On vehicles.** At normal convoy spacing of 100 feet, the wind load on vehicles is negligible.
- **On the substructure.** The effects of wind on the substructure are taken into account when determining the wind load on the superstructure.
- **On the superstructure.** Short bridges are designed with no allowance for wind. For bridges with combined span lengths of 100 feet or more, compute the wind force acting at each pier using the equation below. The safety factor (1.5) accounts for wind acting on the substructure, curbs, and handrails and the fact that wind acts with reduced force on stringers behind the windward stringer. Wind force acts at the top of the windward stringer as shown in *Figure 7-27*.

$$F_w = 0.03(1.5d)\frac{L_1 + L_2}{2} \quad (7\text{-}65)$$

where—

F_w = *wind force on pier, in kips*
d = *superstructure depth (from the tread to the bottom of the stringer), in feet*
L_1 = *length of span 1, in feet*
L_2 = *length of span 2, in feet*

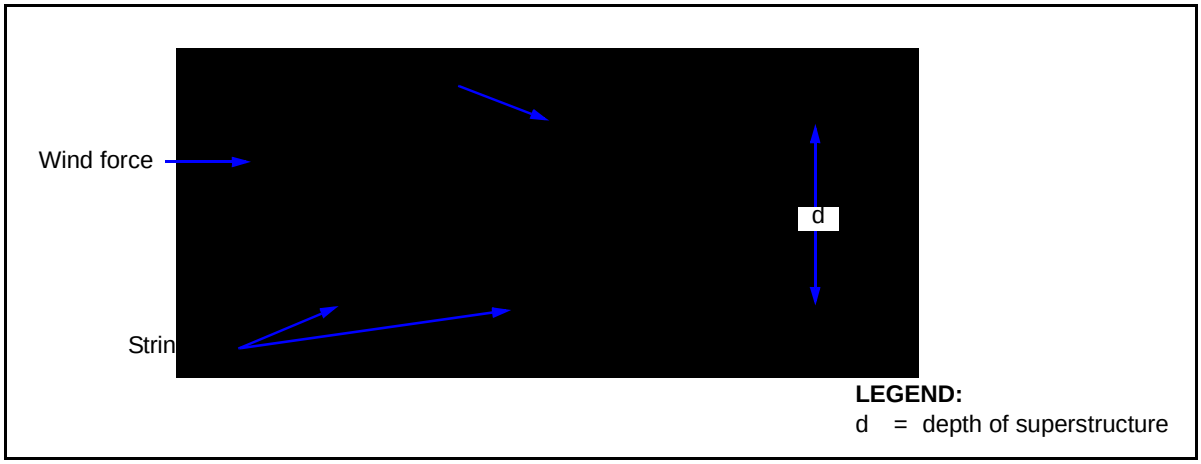

Figure 7-27. Wind Force on the Superstructure

Water Force on the Substructure

7-80. Water force acts on a pier at one-fourth the water height, measured downward from the water surface *(Figure 7-28, page 7-40).* To determine the water force acting on a pier, first compute the area of the pier or posts upon which the water force acts.

- Compute the area of a concrete pier on which the water force acts as follows:

$$A_s = b_s d \quad (7\text{-}66)$$

where—

A_s = *stem area on which water force acts, in square feet*
b_s = *stem width, in feet*
d = *water depth above the lowest point of scour, in feet (Figure 7-28)*

- Compute the area of a pile or post on which the water force acts as follows:

$$A = 2N_r D_p d \quad (7\text{-}67)$$

where—

A = *pile area on which water force acts, in square feet*
N_r = *number of rows of piles or posts*
D_p = *pile diameter, in feet*
d = *water depth above the lowest point of scour, in feet (Figure 7-28)*

- Compute the water force acting on a pier as follows:

$$F_w = \frac{K_f v_y^2 A}{1{,}000} \quad (7\text{-}68)$$

where—

F_w = *water force acting on the pier, in kips*
K_f = *friction coefficient of water on the pier (Table 7-3)*
v_y = *water velocity, in fps*
A = *contact area (concrete or pile), in square feet (equation 7-67)*

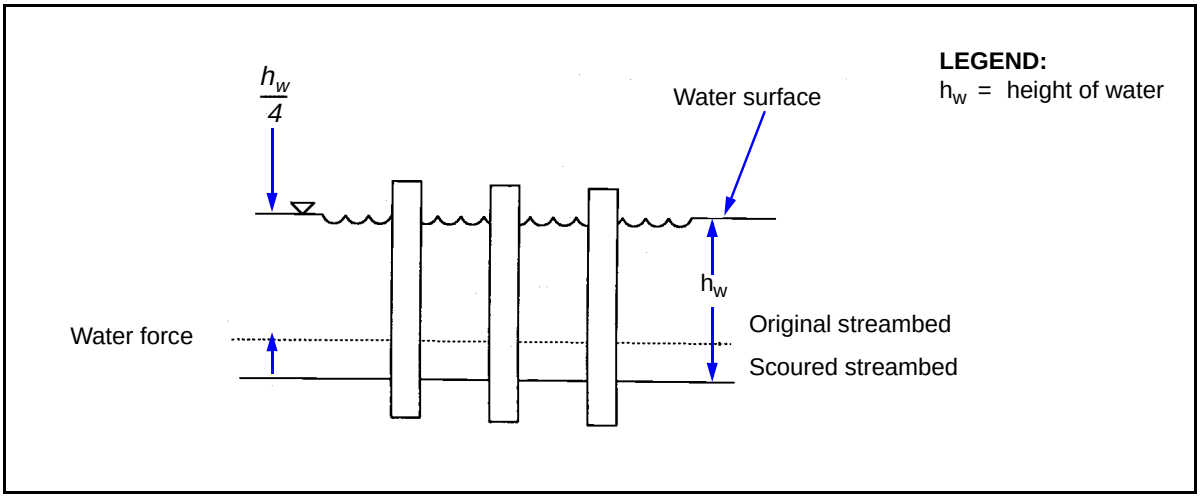

Figure 7-28. Water Force on the Substructure

Table 7-3. Pier Friction Coefficients

Pier Shape	Pier Friction Coefficients (K_f)
Square	1.4
Triangular	0.7
Round	0.7
Round piles	0.7
H-piles	1.4

Ice Forces

7-81. Consider the forces from ice as follows:

- **Crushing.** Ice crushing on concrete piers is negligible, since the compressive strength of concrete is much greater than the crushing force of ice. Timber piers, however, must be protected if the temperature falls below 0 degrees Fahrenheit (F). To protect the piers, attach steel angles to break up the ice *(Figure 7-29A)*.
- **Thrust.** Ice thrust occurs at normal water level during winter months. Estimate this force using the equation below. For piers with dolphins *(Figure 7-29B)*, reduce the ice thrust by 50 percent.

$$F_i = 0.4bt \quad (7\text{-}69)$$

where—

F_i = *ice thrust, in ksi*
b = *pier width, in inches*
t = *ice thickness, in inches*

- **Pileup.** Ice pileup occurs during the spring thaw when river ice breaks up and moves downstream in floes. These floes create large impact loads on anything in their path. In streams where ice pileup could occur, bridge piers should either be located out of the water or protected by dolphins.

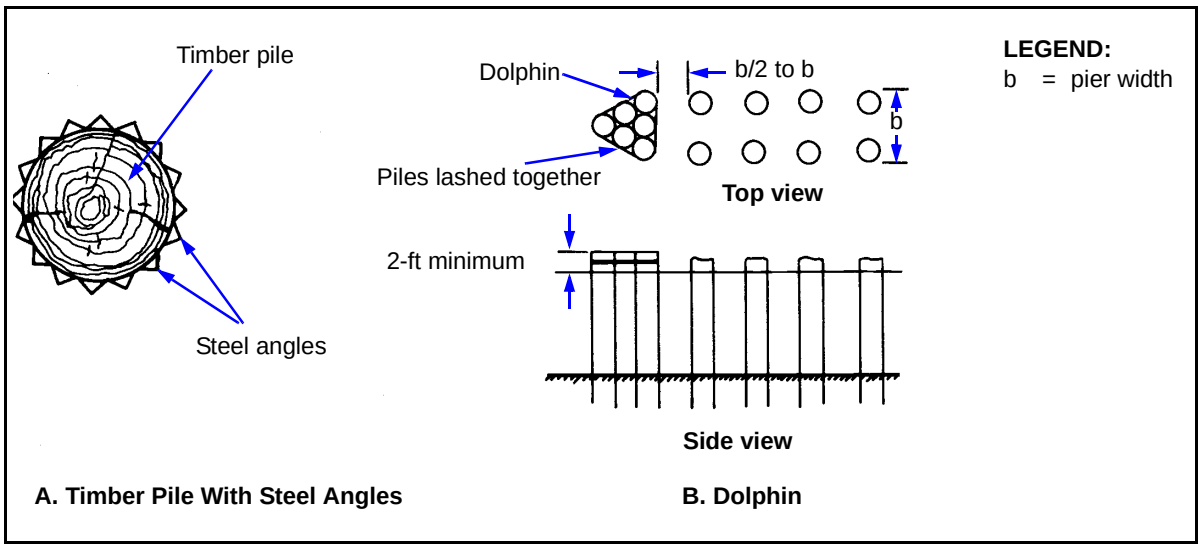

Figure 7-29. Pier Protection Devices

INTERMEDIATE-SUPPORT SELECTION

7-82. Intermediate supports may be constructed of timber, steel, concrete, or a combination of materials. They may be supported by footings or piles. *Figures 7-30* through *7-36, pages 7-42* through *7-45*, show various types of intermediate supports required for different conditions. *Table 7-4, page 7-45*, gives a general guide for selecting intermediate supports.

TIMBER-CRIB-PIER DESIGN

7-83. Timber-crib piers are assembled in log-cabin fashion *(Figure 7-30)*. For stability, the bottom of the crib is wider than the top. The base width is at least one-third the pier height. Drift bolts hold the timbers together at the corners. Fill the crib with rocks for ballast, if desired. For use in water, partially construct the crib on the shore, float it to position, and then sink it by filling it with rocks. Make the top of the pier level and solid to form a substantial support. Bridge stringers may rest directly on top of the crib. If more height is needed, construct a short timber-trestle bent or pier on top of the crib.

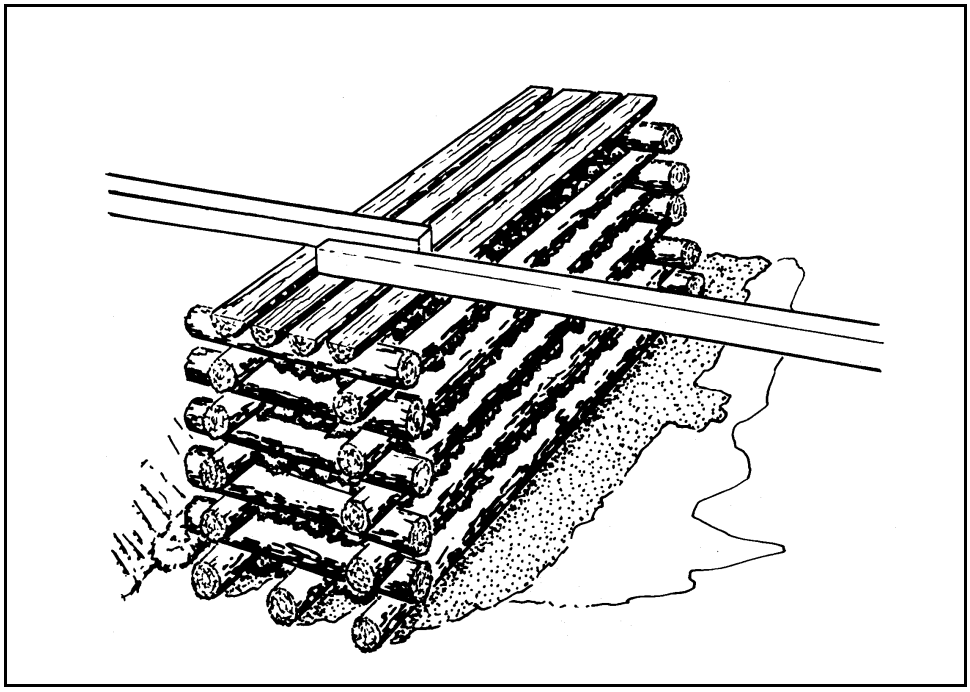

Figure 7-30. Timber-Crib Pier

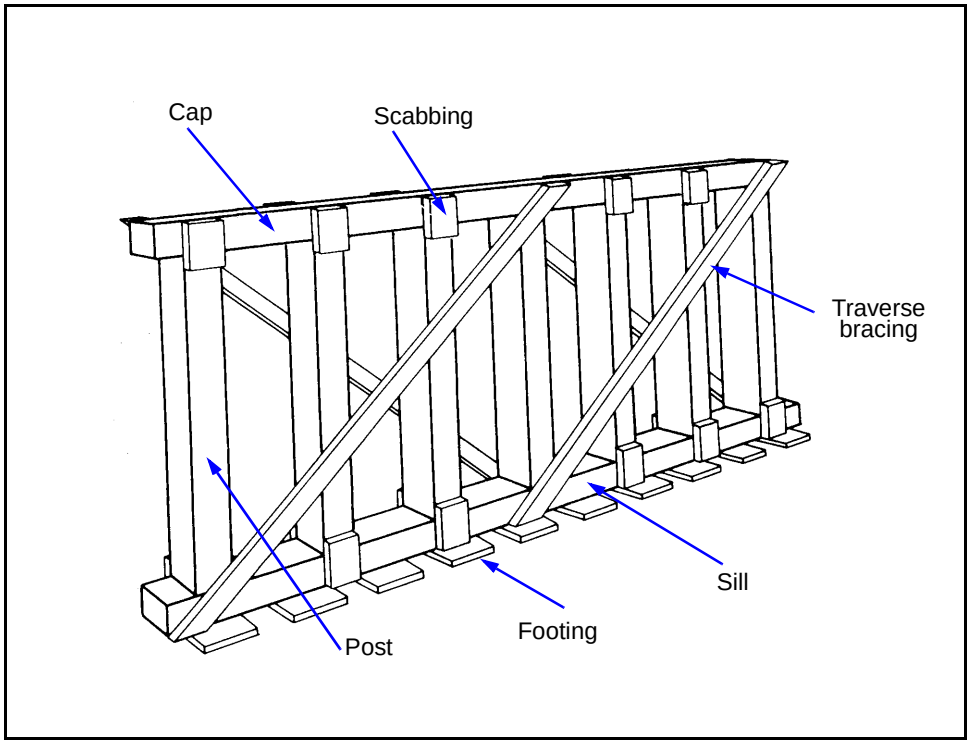

Figure 7-31. Timber-Trestle Bent

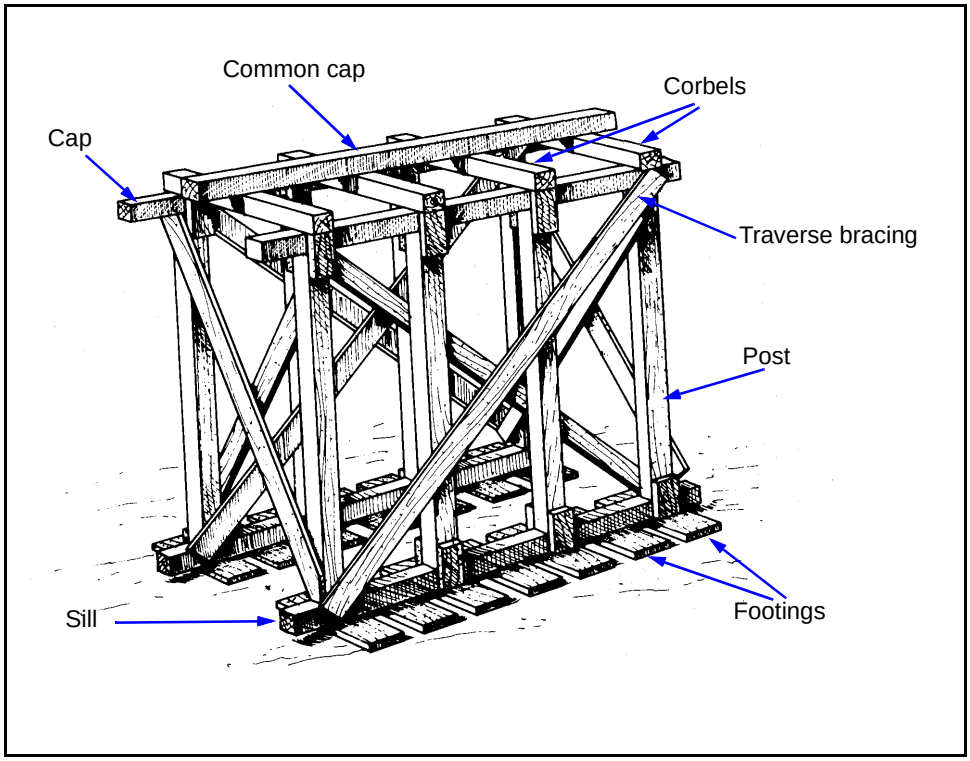

Figure 7-32. Timber-Trestle Pier

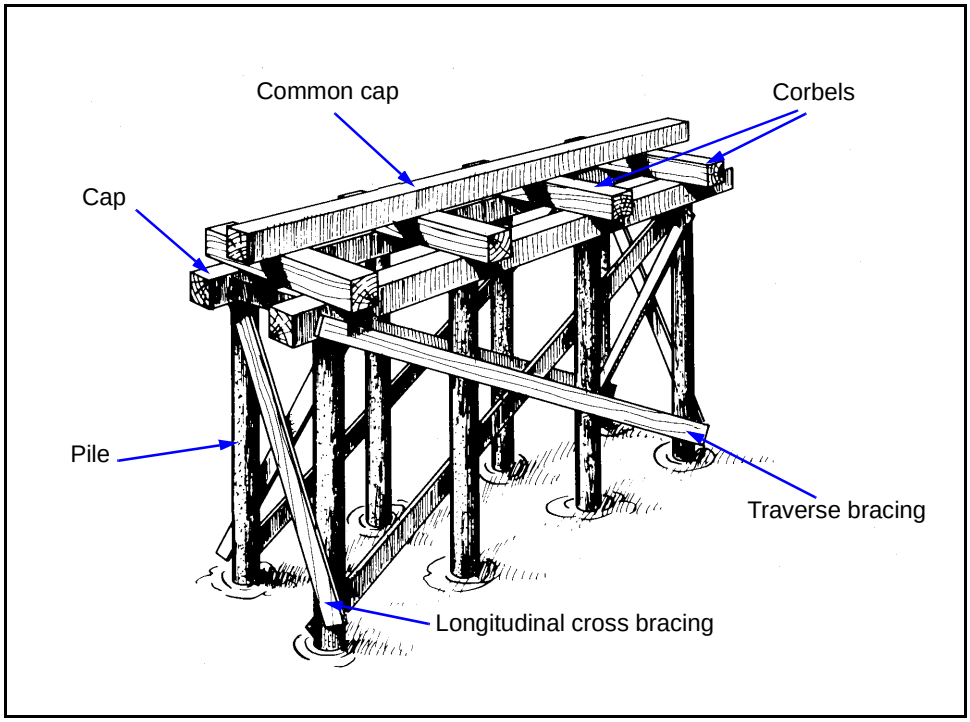

Figure 7-33. Pile Pier

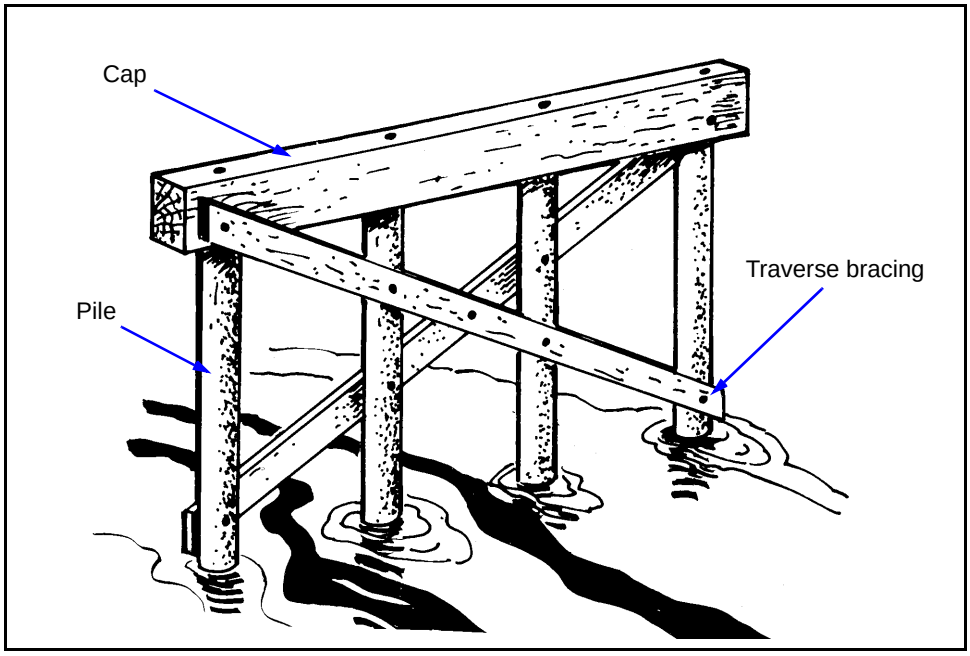

Figure 7-34. Pile Bent

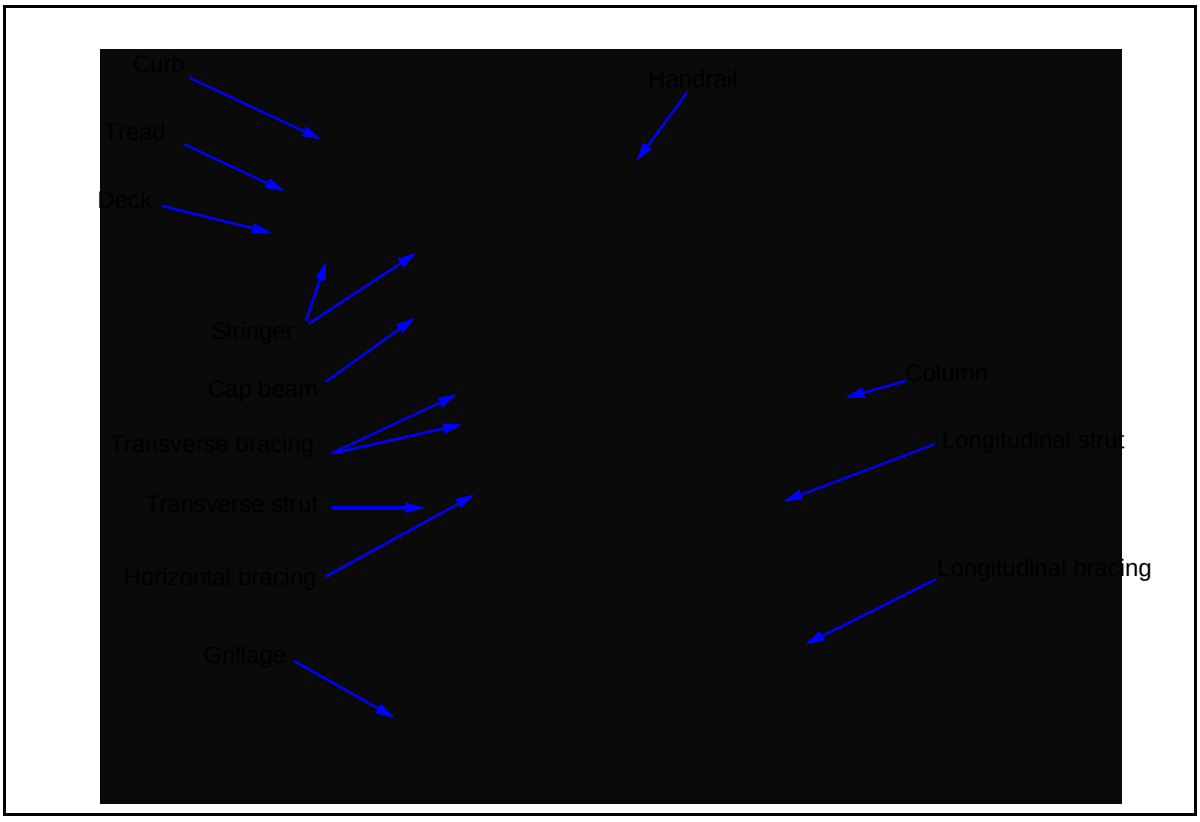

Figure 7-35. Steel-Framed Tower

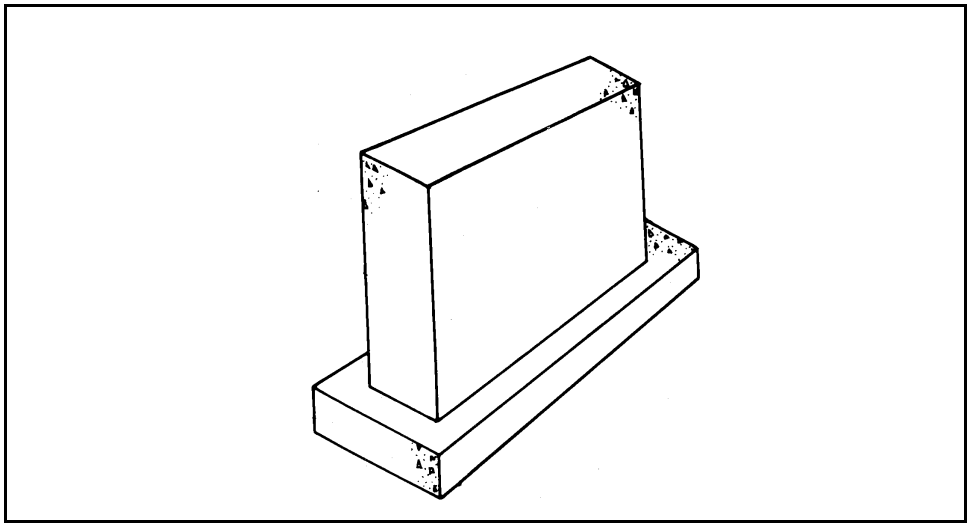

Figure 7-36. Concrete Pier

Table 7-4. Intermediate-Support Selection Guide

Type	Combined Span Length	Grade Height	Remarks
Timber-crib pier	To 50 feet	To 12 feet	Highway bridges only. Designed for vertical loads only. Steel or timber stingers.
Timber-trestle bent	To 30 feet	To 12 feet	Highway bridges only. Designed for vertical loads only. Steel or timber stringers.
Timber-trestle pier	To 60 feet	To 18 feet	Highway bridges only. Designed for vertical loads only. Steel or timber stringers.
Timber-pile bent	To 50 feet	Governed by unbraced length	Highway bridges only. Designed for vertical and lateral loads. Steel or timber stringers.
Timber-pile pier	To 200 feet	Governed by unbraced length	Highway and RR bridges. Designed for vertical and lateral loads. Steel or timber stringers.
Steel-pile bent	To 70 feet	Governed by unbraced length	Highway bridges only. Designed for vertical and lateral loads. Steel or timber stringers.
Steel-pile pier	Any length	Governed by unbraced length	Highway and RR bridges. Designed for vertical and lateral loads. Steel or timber stringers.
Framed-timber tower	Any length	To 60 feet	Highway and RR bridges. Designed for vertical and lateral loads. Steel or timber stringers.
Framed-steel tower	Any length	To 80 feet	Highway and RR bridges. Designed for vertical and lateral loads. Steel or timber stringers.
Concrete pier	Any length	To 25 feet	Highway and RR bridges. Designed for vertical and lateral loads. Steel or timber stringers.

TIMBER-TRESTLE-BENT AND -PIER DESIGN

7-84. Timber-trestle bents and piers *(Figures 7-31* and *7-32, pages 7-42* and *7-43)* are not suitable for use in soft soil or swift or deep watercourses. Construct them in dry, shallow gaps with firm soil. When longitudinal spacing between bents exceeds 25 feet, bracing becomes cumbersome. To provide for greater support and longitudinal stability for longer spans, use timber-trestle piers. The design of timber-trestle piers is the same as the bent design except for the cap and corbel system *(paragraph 7-120)*. Use the procedures discussed below to design a timber-trestle bent.

Loads

7-85. Use the procedures in *paragraph 7-66* to determine dead and live loads. Compute the total design load as follows:

$$P = P_{DL} + \frac{P_{LL}N_s}{4} \quad (7\text{-}70)$$

where—

P = *total design load of the bent, in kips*
P_{DL} = *dead load of the pier, in kips (equation 7-56)*
P_{LL} = *live load of the pier, in kips (equation 7-57)*
N_s = *number of stringers in the superstructure*

Size and Number of Members

7-86. **Posts.** The absolute minimum post size is 6 x 6 inches, and the minimum number of posts per bent is four.

- Compute the allowable bearing capacity per post as follows:

$$P_B = F_c A \quad (7\text{-}71)$$

where—

P_B = *allowable bearing capacity of the post, in kips*
F_c = *allowable compression (parallel to the grain of the post material), in ksi (Table C-1, pages C-3 through C-6)*
A = *cross-sectional area of the post, in square inches (Table C-4, page C-9)*

- Limit the length of the post to ensure that it will not fail by buckling. Check as follows:

$$L \leq 30b \quad (7\text{-}72)$$

where—

L = *post length, in feet*
b = *post width (rectangular post) or 90 percent of the post diameter, in feet*

- Recompute the number of posts required as follows:

$$N_{pr} = \frac{P}{P_B} \quad (7\text{-}73)$$

and—

$$N_p = \frac{N_{pr}}{N_r} \quad (7\text{-}74)$$

where—

N_{pr} = *required number of posts in the bent*
P = *total design load on the bent, in kips (equation 7-70)*
P_B = *allowable bearing capacity per post, in kips (equation 7-71)*
N_p = *actual number of piles per row (minimum of four) (round up to the nearest whole number)*
N_r = *number of rows*

7-87. **Caps and Sills.** The absolute minimum size for caps and sills is 6 x 8 inches. The larger dimension is usually vertical. The cap and sill must also be at least as wide as the posts *(Figure 7-37, page 7-48)*. Determine the bearing failure, the post spacing, and the depth as follows:

- **Bearing failure.** Check the cap and sill for bearing failure. If bearing failure is a problem, increase the number of posts.

$$\frac{P}{N_{pr}A} < F_B \quad (7\text{-}75)$$

where—

P = *total cap or sill load, in kips*
N_{pr} = *required number of posts in the bent (equation 7-73)*
A = *cross-sectional area of post or pile, in square inches (Table C-4)*
F_B = *allowable bearing perpendicular to the grain of post or pile material, in ksi (Table C-1)*

- **Post spacing.** Compute post spacing the same as stringer spacing.

$$S_p = \frac{12b_R}{N_p - 1} \quad (7\text{-}76)$$

where—

S_p = *post or pile spacing, in inches*
b_R = *curb-to-curb roadway width, in feet*
N_p = *actual number of posts or piles in the bent (equation 7-74)*

- **Depth.**

$$d_c > \frac{S_p}{5} \quad (7\text{-}77)$$

where—

d_c = *cap or sill depth, in inches*
S_p = *post or pile spacing, in inches (equation 7-76)*

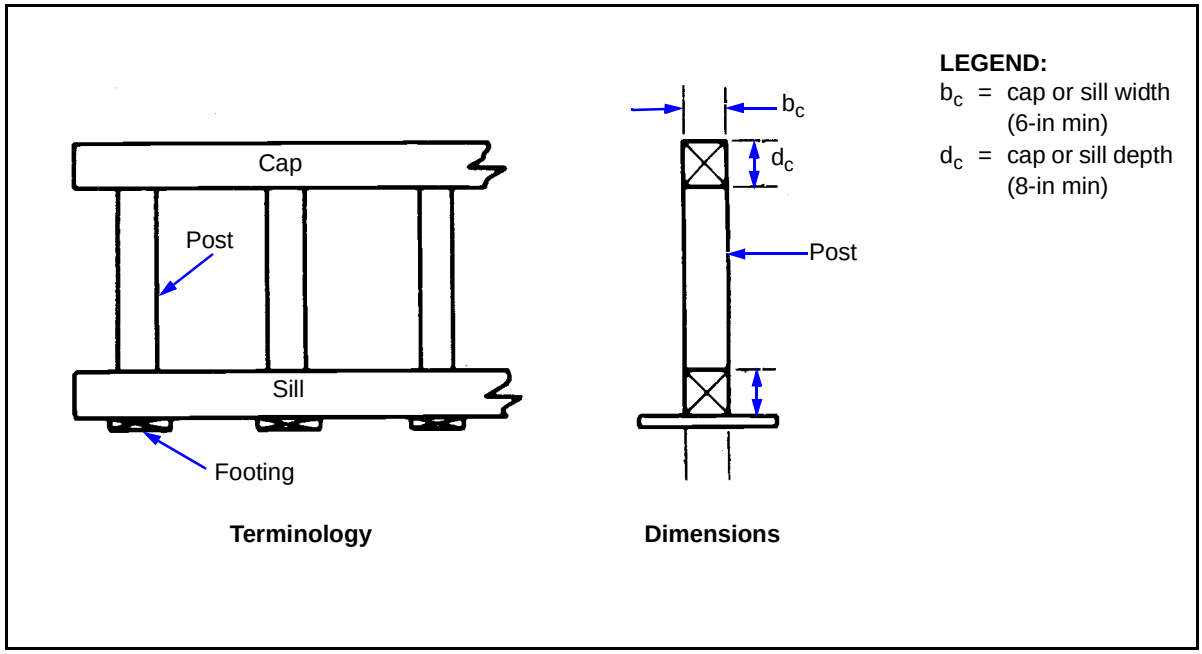

Figure 7-37. Limiting Dimensions for a Timber-Trestle Bent

7-88. **Footings.** The number of footings must equal or exceed the number of posts. A footing design for bents is identical to a footing design for abutments *(paragraph 7-22)*.

7-89. **Bracing.** Provide adequate longitudinal bracing between bents to ensure longitudinal stability of the bridge. The minimum bracing size is 2 x 12 inches.

PILES

7-90. A pile is a slender structural member that is forced into the ground to support vertical, horizontal, or inclined loads. Since one pile may not have the capacity to carry a certain load, several piles may have to be grouped together for the pile foundation. Use piles when placing a foundation on soft soil, in deep water, or in swift watercourses that are likely to scour. The factors discussed below will affect pile design.

Scour

7-91. Scour is the gradual removal of earth surrounding a pier or abutment by water action *(Figure 7-38)*. If a bridge has long spans, it needs intermediate piers, which obstruct the water flow and increase stream and scouring action. (When the stream velocity is great, or as much as 2 fps, the bottom may be disturbed.) For example, when a pile is inserted into a flowing watercourse, the turbulence and eddy currents created by the pier cause scour. If the axis of a pier is not parallel to the direction of flow, excessive scour will result. Minimize scour by ensuring proper alignment of piers in watercourses.

7-92. **Local Scour.** The scour depth varies with many factors. As a rule, estimate local scour depth as follows:

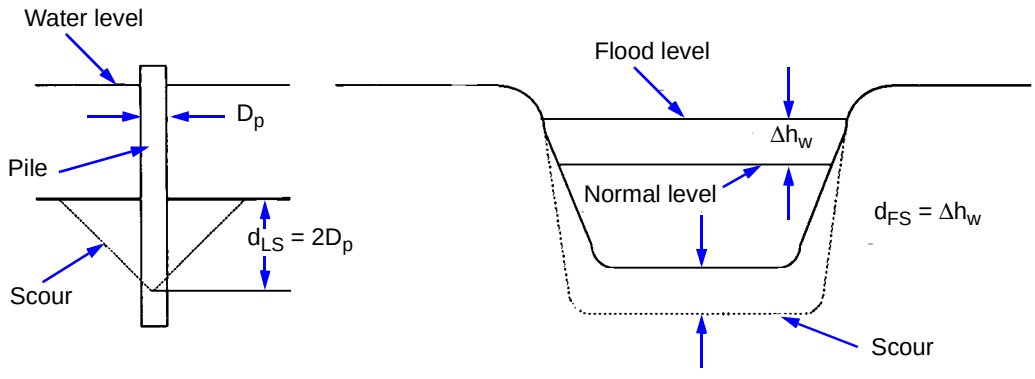

LEGEND:

Δh_w = change in water height
d_{FS} = flood-scour depth
d_{LS} = depth of local scour
D_p = diameter of the pile

Figure 7-38. Types of Scour

$$d_{LS} = 2D_p \quad (7\text{-}78)$$

where—

d_{LS} = *local-scour depth, in feet*
D_p = *pile diameter, in feet*

7-93. **Flood Scour.** Consider flood scour in the substructure design because it is the cause of many bridge failures. If possible, determine the depth of flood scour at the site *(Figure 7-38B)*. If it cannot be determined, estimate the depth of flood scour as follows:

$$d_{FS} = \Delta h_w \quad (7\text{-}79)$$

where—

d_{FS} = *flood-scour depth, in feet*
Δh_w = *change in the water-surface elevation from normal to flood stages, in feet (Figure 7-38B)*

7-94. **Total Scour.** Total scour is the combination of local and flood scour. When the water surface drops after a flood, sediment is redeposited in the scoured area and the bottom returns to its original level. Compute the total scour as follows:

$$d_{TS} = d_{LS} + d_{FS} \quad (7\text{-}80)$$

where—

d_{TS} = *total-scour depth, in feet*

d_{LS} = *local-scour depth, in inches (equation 7-78)*
d_{FS} = *flood-scour depth, in inches (equation 7-79)*

7-95. **Scour Prevention.** Protect foundations from scour by—

- Locating bents or piers parallel to the direction of water flow.
- Placing sandbags around bents, piers, or abutments on the upstream sides.
- Placing riprap around bents, piers, or abutments.
- Driving a row of closely spaced pile fenders (dolphins) perpendicular to the water flow on the upstream side of the bent, pier, or abutment. Recognize that fenders may compound the problem of scour because they further restrict water flow. Fenders are most effective when their widths are small relative to the watercourses width.

Pile-Support Types

7-96. Pile-support types include end bearing, friction, and batter. Each is discussed below.

7-97. **End-Bearing Piles.** End-bearing piles *(Figure 7-39A)* are firmly seated on rock or hard strata. The entire support of the piles is provided by the hard strata so that the load carried is limited by the strength and unbraced length of the pile material.

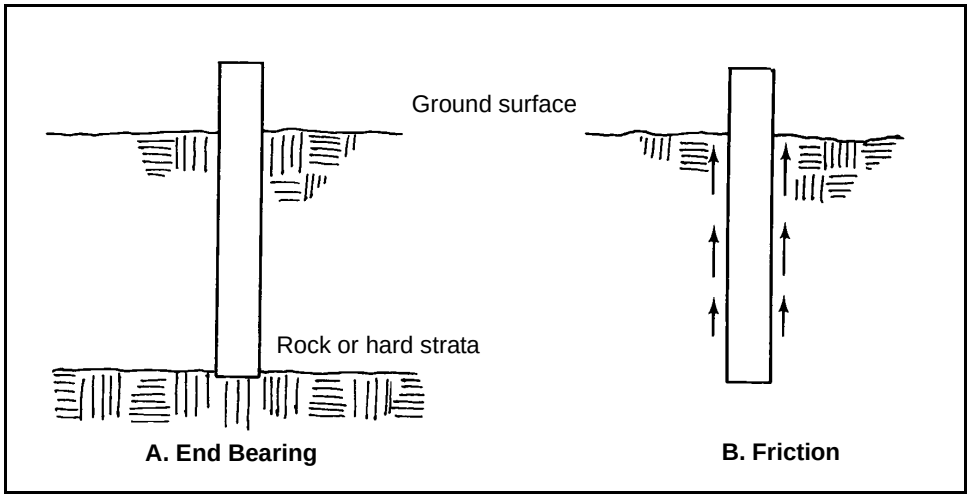

Figure 7-39. Types of Pile Support

7-98. **Friction Piles.** Friction piles *(Figure 7-39B)* derive their entire support from friction between the piles and the surrounding soil. The load a friction pile will carry depends on the properties of the soil and the strength of the pile material.

7-99. **Batter Piles.** Batter piles are driven into the ground at an angle *(Figure 7-40)*. The maximum slope at which a pile may be driven is 1:1 (horizontal to vertical), due to the limitations of the driving equipment. The normal slope for batter piles is 1:12. If the slope is within 1:12, the vertical

load-carrying capacity will not have to be reduced. Using batter piles complicates the design of a pile foundation; therefore, design pile foundations for vertical piles. Then install batter piles as the outside piles for additional safety and stability.

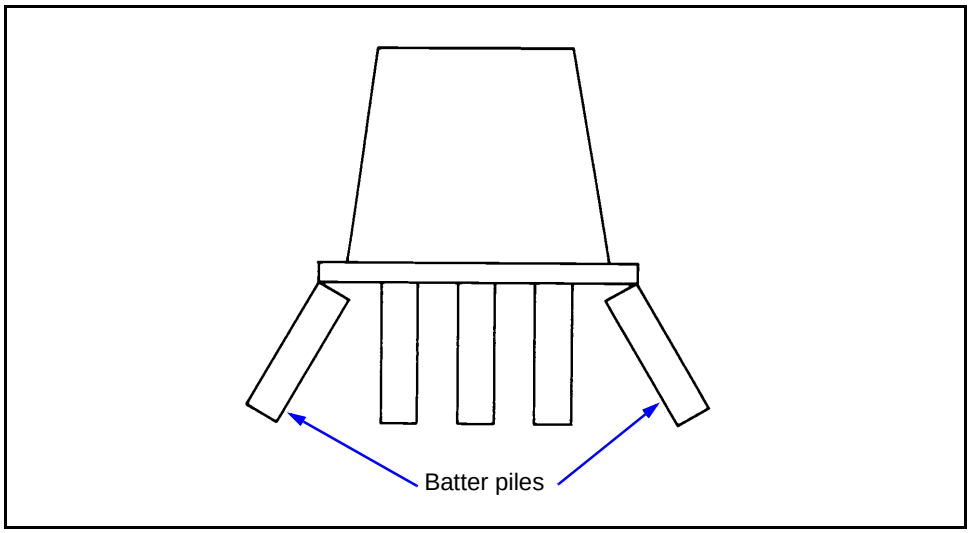

Figure 7-40. Batter Piles

PILE FOUNDATIONS

7-100. Pile foundations may be constructed of timber, steel, or concrete. Since concrete piles require special handling and equipment, they are not used in military construction. Design principles for timber and steel piles are the same except for the exceptions discussed below.

Allowable Load

7-101. For an end-bearing pile, the maximum allowable load is the smaller value of the allowable load or the buckling load of the pile. For a friction pile, the maximum allowable load is the smallest value of the allowable load, the buckling load, the soil friction capacity, or the pile-driving capacity. Check the bearing and buckling loads in both end-bearing and friction piles. Also, check the soil and pile-driving capacities in friction piles.

7-102. **Bearing Capacity.** The first step in designing a pile foundation is to determine the maximum allowable load that a single pile will carry. Compute the allowable bearing capacity of a pile as follows:

$$P_B = F_c A \qquad (7\text{-}81)$$

where—

P_B = *allowable bearing capacity per pile, in kips*
F_c = *allowable compression (parallel to the grain of the pile material), in ksi (Table C-1, pages C-3 through C-6)*
A = *cross-sectional area of the pile, in square inches (Table C-5, page C-10)*

7-103. **Buckling Load.** The allowable buckling load for a single pile depends on the unbraced length of the pile, the size of pile, and the type of soil.

7-104. The fixed point (FP) is the point below which the pile is assumed to be completely rigid, so that any bending or buckling in the pile will take place above the FP *(Figure 7-41)*. The FP distance varies with the soil type (5 feet for sand and 10 feet for clay). Interpolate the FP for intermediate soils. Measure the FP distance from the point of lowest scour to ensure that the design accounts for the worst possible conditions.

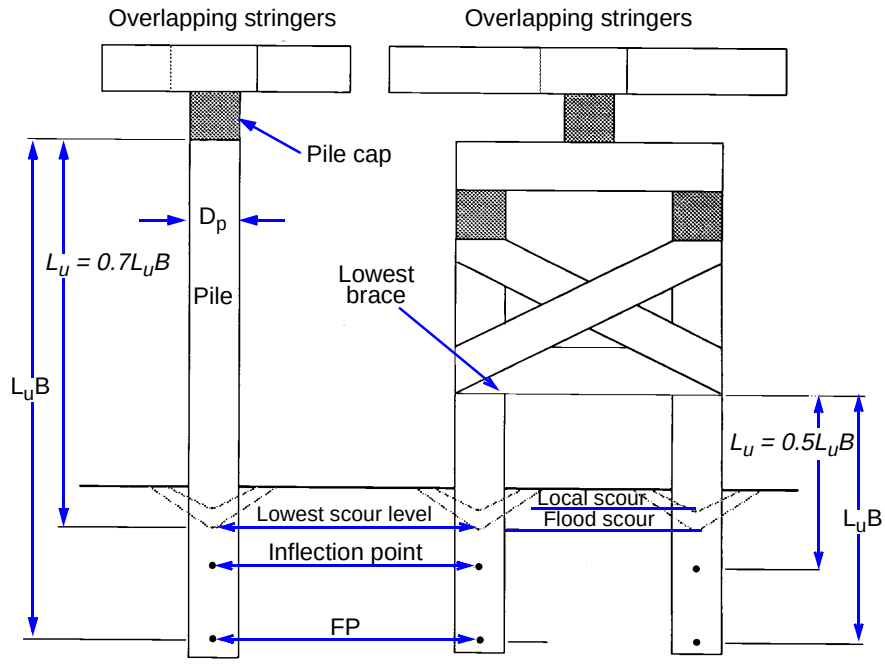

LEGEND:
L_u = unbraced length
L_uB = length from the lowest brace to the FP
D_p = diameter of the pile

Figure 7-41. Maximum Unbraced Length

7-105. For a single row of piles unbraced in the longitudinal direction, the unbraced length is 70 percent of the distance from the FP to the top of the pile *(Figure 7-41A)*. For a single row of piles with adequate longitudinal bracing, the unbraced length is one-half the distance from the FP to the lowest bracing. For piles arranged in two or more rows with adequate bracing between, the unbraced length is one-half the distance from the FP to the lowest bracing *(Figure 7-41B)*.

- **Timber piles.** If the unbraced length divided by the pile diameter is less than or equal to 27, buckling is not a problem and no further

checks are necessary. If the length divided by the pile diameter is greater than 27, find the allowable buckling load as follows:

$$P_{BU} = A\left[\frac{0.225E}{\left(\frac{L_u}{D}\right)^2}\right] \quad (7\text{-}82)$$

where—

P_{BU} = *buckling load, in kips*
A = *cross-sectional area of the pile, in square inches (Table C-5)*
E = *modulus of elasticity, in ksi (Table C-1)*
L_u = *unbraced length, in feet*
D = *pile diameter, in feet*

- **Steel piles (A36).** Compute the allowable buckling load as follows:

$$P_{BU} = A\left[(24.7 - 0.00077)\left(\frac{KL_u}{r}\right)^2\right] \quad (7\text{-}83)$$

where—

P_{BU} = *allowable buckling load, in kips*
A = *cross-sectional area of the pile, in square inches (Table C-5)*
K = *effective length factor (Table D-9, page D-9)*
L_u = *unbraced length, in inches*
r = *the least radius of gyration, in inches (Table D-6, page D-6)*

7-106. **Soil Capacity.** For friction piles, use load tests or static or dynamic formulas to find the allowable capacity of the soil surrounding the piles. Load tests are time-consuming and are justified only on large, permanent bridges. If the soil type is known, the soil capacity can be estimated using a static formula. To use this static formula, first find the area of the pile in contact with the soil.

- Compute the area for timber as follows:

$$A = \pi D L_g \quad (7\text{-}84)$$

where—

A = *area of the timber pile in contact with the soil, in square feet*
D = *pile diameter, in feet*
L_g = *length of pile in the soil, in feet*

- Compute the area for steel as follows:

$$A = 2(b_p + d_p)L_g \quad (7\text{-}85)$$

where—

A = *area of the steel pile in contact with the soil, in square feet*
b_p = *pile width, in feet*
d_p = *depth of pile section, in feet*
L_g = *length of pile in the soil, in feet*

- Compute the pile capacity (once the area of pile in contact with the soil is known) as follows:

$$P_f = f_s A \quad (7\text{-}86)$$

where—

P_f = *pile capacity (based on friction between pile and soil), in kips*
f_s = *allowable friction, in ksf (Table H-3, page H-2)*
A = *area of the pile in contact with the soil, in square feet (equation 7-84)*

7-107. If the soil conditions are not known, estimate the allowable soil capacity by driving a test pile and applying a dynamic formula to the results. Also use the dynamic formulas to check capacities estimated by the static formula. Dynamic formulas are only approximations; therefore, use them only if load tests are unavailable.

7-108. The basic assumption behind dynamic formulas is that driving resistance equals the static resistance of the pile to loads after driving is completed. However, this assumption is not always correct, and the more impervious the soil, the greater the discrepancy between the actual and computed loads. As a pile is driven, it squeezes water from the soil. Until the water drains from the surface of the pile, the full friction between the pile and the surrounding soil cannot develop. To lessen the discrepancies, let the pile rest for at least 24 hours. Redrive for at least 10 blows with a drop hammer or 30 blows with a pneumatic or diesel hammer. Use the penetration per blow after the pile has rested to estimate the allowable pile capacity.

7-109. **Driving Capacity.** Compute the driving capacity as follows:

- **Timber piles driven by a drop hammer.**

$$P_{TP} = \frac{2wh}{P_p + 1} \quad (7\text{-}87)$$

where—

P_{TP} = *driving capacity based on test pile, in kips*
w = *drop hammer or ram weight, in kips*
h = *average fall of the drop hammer, in feet*
P_p = *average pile penetration (last 6 blows of a drop hammer or last 20 blows of a powered drop hammer), in inches*

- **Steel piles driven by a drop hammer.**

$$P_{TP} = \frac{3wh}{P_p + 1} \quad (7\text{-}88)$$

where—

P_{TP} = *driving capacity based on test pile, in kips*
w = *drop hammer or ram weight, in kips*
h = *average fall of the drop hammer, in feet*

P_p = *average pile penetration (last 6 blows of a drop hammer or last 20 blows of a powered drop hammer), in inches*

- **Timber piles driven by a single-acting steam, pneumatic, or open-end diesel hammer.**

$$P_{TP} = \frac{2wh}{P_p + 0.1} \quad (7\text{-}89)$$

where—

P_{TP} = *driving capacity based on test pile, in kips*

w = *drop hammer or ram weight, in kips*

h = *average fall of the drop hammer, in feet*

P_p = *average pile penetration (last 6 blows of a drop hammer or last 20 blows of a powered drop hammer), in inches*

- **Steel piles driven by a single-acting steam, pneumatic, or open-end diesel hammer.**

$$P_{TP} = \frac{3wh}{P_p + 0.1} \quad (7\text{-}90)$$

where—

P_{TP} = *driving capacity based on test pile, in kips*

w = *drop hammer or ram weight, in kips*

h = *average fall of the drop hammer, in feet*

P_p = *average pile penetration (last 6 blows of a drop hammer or last 20 blows of a powered drop hammer), in inches*

- **Timber piles driven by a double-acting steam, pneumatic, or closed-end diesel hammer.**

$$P_{TP} = \frac{2E_H}{P_P + 0.1} \quad (7\text{-}91)$$

where—

P_{TP} = *driving capacity based on test pile, in kips*

E_H = *impact energy per blow of the hammer, in foot-pounds (Table 7-5, page 7-56)*

P_p = *average pile penetration (last 6 blows of a drop hammer or last 20 blows of a powered drop hammer), in inches*

- **Steel piles driven by a double-acting steam, pneumatic, or closed-end diesel hammer.**

$$P_{TP} = \frac{3E_H}{P_P + 0.1} \quad (7\text{-}92)$$

where—

P_{TP} = *driving capacity based on test pile, in kips*

E_H = *impact energy per blow of the drop hammer, in foot-pounds (Table 7-5)*

P_p = *average pile penetration (last 6 blows of a drop hammer or last 20 blows of a powered drop hammer), in inches*

Table 7-5. Impact Energy of Drop Hammers

Type	Strokes per Minute	Energy Foot-Pounds per Blow (E_H)
5,000-pound drop hammer	225	4,150
	195	3,720
	170	3,280
7,000-pound drop hammer	140	8,100
	130	6,800
	120	5,940

Overturning

7-110. Drive piles at least 8 feet into sand or 20 feet into clay to prevent overturning due to lateral loads. For intermediate soils, interpolate the distance.

Pile Groups

7-111. The spacing between rows of piles must equal or exceed three times the pile diameter. The spacing between rows must equal or exceed the spacing between piles. Each row must have at least four piles.

7-112. **Number of Piles Required.** Compute the number of piles as follows:

$$N_{pr} = \frac{P}{P_B} \quad (7\text{-}93)$$

where—

N_{pr} = *required number of piles to support the vertical load*

P = *total design load on the bent, in kips (equation 7-13 or 7-70)*

P_B = *allowable bearing capacity per post, in kips. For end-bearing piles, use the smaller of the bearing and buckling loads. For friction piles, use the smallest of the bearing load, the buckling load, the soil capacity, or the driving capacity.*

7-113. **Group Action.** When several friction piles are driven close together, the interaction of pressure bulbs reduces the efficiency of each pile *(Figure 7-42)*. Use the Converse-Labarre method shown in *Figure 7-43, page 7-58,* to compute the effective number of piles in the group and to—

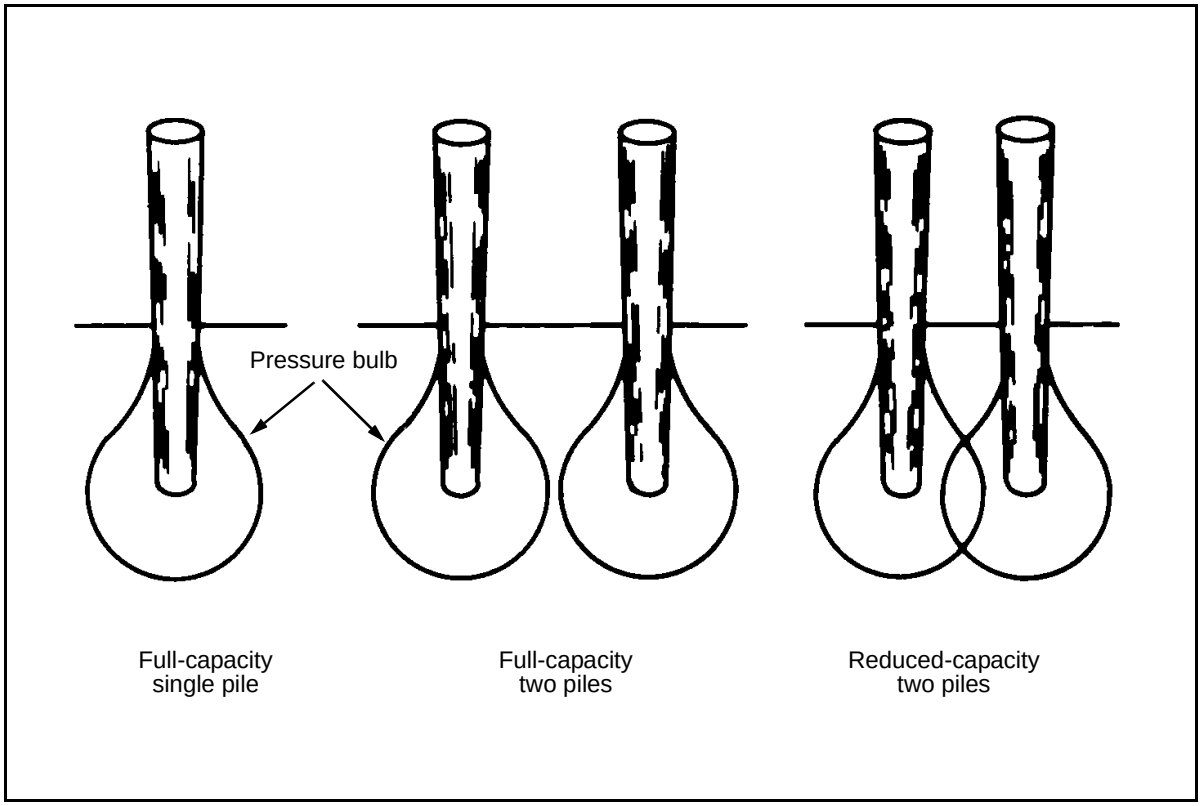

Figure 7-42. Effect of Grouping on Pile Capacity

- Estimate the number of bents. If each adjacent span exceeds 25 feet, a pile pier is needed. If the required number of piles is large, spacing considerations may require a three-bent pier.
- Use the number of bents to determine the theoretical spacing-to-diameter ratio (shown as S_p/D_p). Divide the number of piles required by the number of bents; then determine the theoretical S_p/D_p for the number of piles required per bent.
- Find the required number of piles along the *effective-number-of-piles* axis.
- Project a horizontal line to the right, intersecting the S_p/D_p.
- Interpolate the value of this ratio, with a minimum allowable value of three. Project a vertical line from the intersection of the *effective number of piles* and S_p/D_p to the bottom of the chart. Round the value for the number of piles up to the next higher whole number to get the actual number of piles per bent.
- Recheck the actual S_p/D_p with the rounded number of piles to ensure that it does not fall below three. Also, find the actual number of effective piles by reading the chart in reverse. This value must be greater than or equal to the required number of piles. The end-bearing piles will carry the full allowable pile load without any reduction in efficiency due to group action.

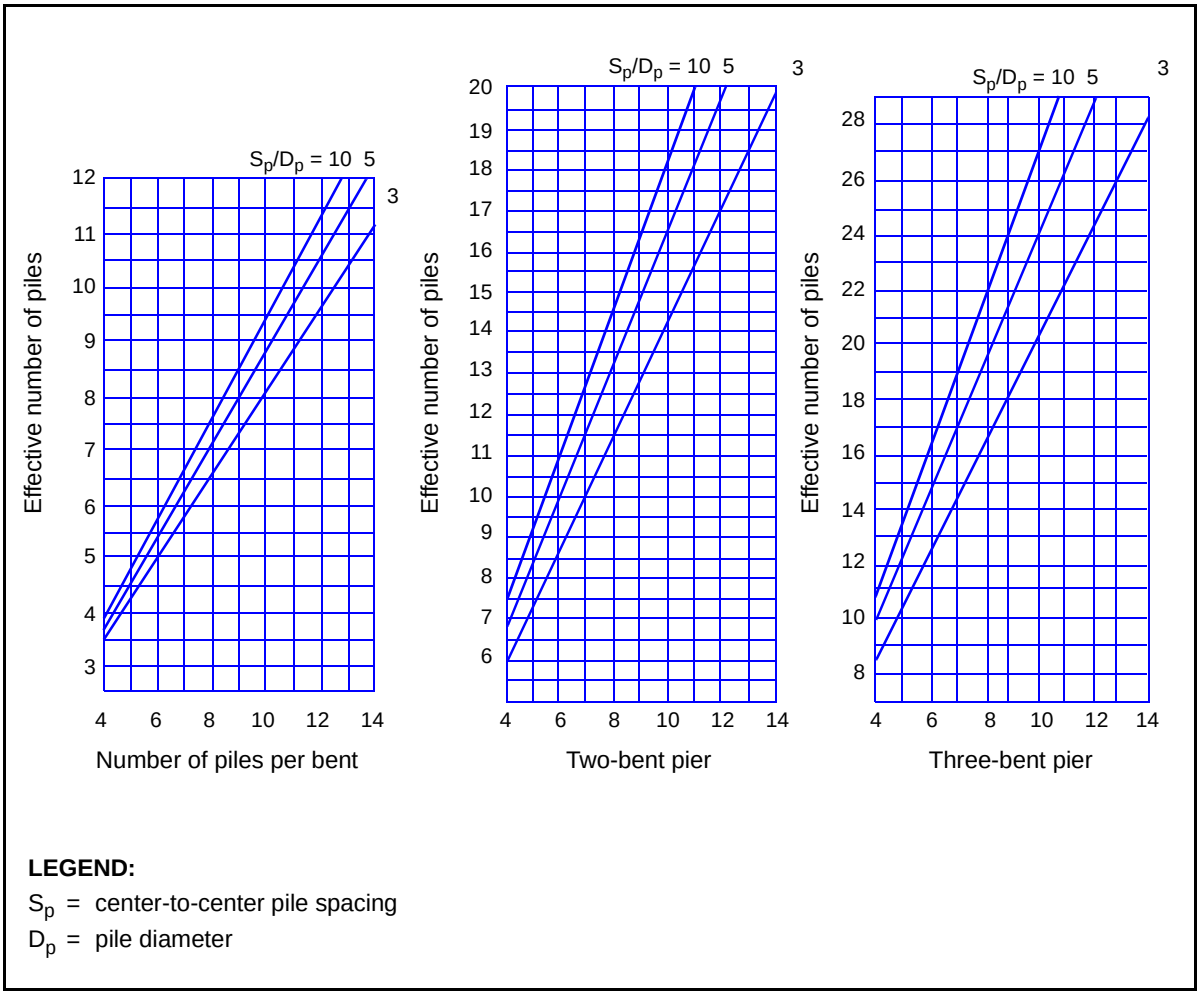

Figure 7-43. Converse-Labarre Method

7-114. **Combined Loading.** Wind, water, and ice are lateral forces that create combined loading conditions. Check the pile supports to ensure that the additional loads created by these forces will not cause failure. For example, compute the maximum actual load on an outside pile in a group as follows *(Figure 7-44, Pile A)*:

$$P_m = \frac{P}{N_p} + \frac{6\Sigma M}{S_p N_p (N_{pr} + 1)} \qquad (7\text{-}94)$$

where—

P_m = *maximum actual load on the outside pile, in kips*
P = *total of the vertical loads on the pile, in kips (equation 7-70)*
N_p = *total number of piles in the group*
ΣM = *total moment of all lateral forces at the FP for both normal and flood stages, in kip-feet (see lateral loads). Use the larger value of total lateral forces for a normal or flood stage.*

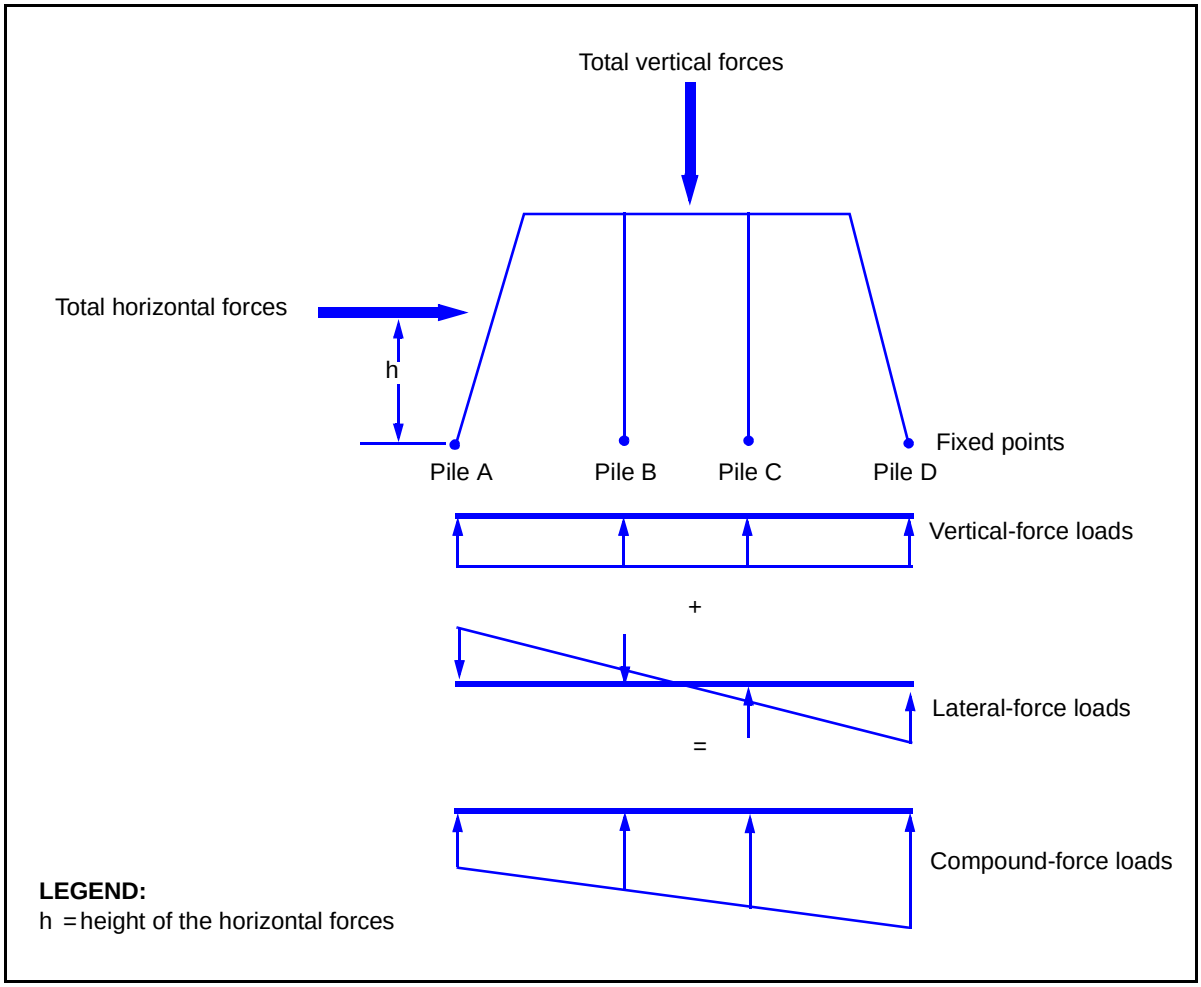

Figure 7-44. Combined Loading

S_p = *pile spacing, in feet (paragraph 7-111)*
N_{pr} = *required number of piles in the row or bent (equation 7-93)*

7-115. The allowable load on any friction pile in the group is computed as follows:

$$P_a = \left[\frac{N_{pe}}{N_{pr}}\right] P_B \qquad (7\text{-}95)$$

where—

P_a = *allowable load on a friction pile, in kips*
N_{pe} = *effective number of piles (Figure 7-43)*
N_{pr} = *number of piles required to carry the vertical load (equation 7-93)*
P_B = *allowable bearing capacity per pile, in kips (equation 7-15). For end-bearing piles, use the smaller of the bearing and buckling loads. For friction piles, use the smallest of the bearing load, buckling load, soil capacity, and driving capacity.*

7-116. For end-bearing piles, the allowable load on the outside pile is equal to the load per pile. For safety reasons, the actual load on the outside pile should be less than the load on a vertical pile. Compute the maximum actual load on an outside pile as follows:

$$P_m = \frac{P_{DL}}{N_p} + \frac{6\Sigma M}{S_p N_p (N_{pr} + 1)} \quad (7\text{-}96)$$

where—

P_m = *maximum actual load on the outside pile, in kips*
P_{DL} = *total dead load, in kips (equation 7-56)*
N_p = *total number of piles in the group*
ΣM = *total moment of all lateral forces at the FP for both normal and flood stages, in kip-feet (see lateral loads). Use the larger value of total lateral forces for a normal or flood stage.*
S_p = *pile spacing, in feet (paragraph 7-111)*
N_{pr} = *total number of piles in the row or bent (equation 7-93)*

7-117. If the actual load on a single pile is negative, compare it with the allowable buoyancy force. Estimate this force as 40 percent of the soil bearing capacity, where the soil capacity is the allowable soil load *(equation 7-86)*. For safety, the actual load is less than or equal to the allowable buoyancy force. If the checks indicate that overload or buoyancy forces make the support unsafe, increase the pile spacing or add more piles or rows of piles.

PILE-PIER DESIGN

7-118. Pile-pier design is similar to pile-bent design except that two or more rows of piles are used. Also, pile piers require the design of a common-cap and corbel system as discussed below.

PILE-BENT DESIGN

7-119. A pile bent consists of a single row of piles with a pile cap. Brace bents to one another or to the adjacent abutment to reduce the unbraced length and to provide stability. Use the procedures described in *paragraphs 7-100* through *7-117* to design a pile bent, and use the procedures discussed below to design a pile cap. The consolidated process is as follows:

Step 1. Determine the loads acting on the bent.

Step 2. Determine the design capacity of a single pile (maximum allowable load).

Step 3. Determine the number of piles required.

Step 4. Determine the actual number of piles to be used based on group action.

Step 5. Check the combined loading produced by lateral loads and adjust the number of piles and spacing, if necessary.

Step 6. Design the cap by using the procedures outlined below.

CAP, CORBEL, AND COMMON-CAP DESIGN FOR PILE PIERS

7-120. To transfer a load from the superstructure to the supports properly, place a cap on each pile or post bent. If there are two or more bents in a single pier, use a common-cap and corbel system. A corbel is simply a short stringer connecting the bents *(Figures 7-45* and *7-46)*.

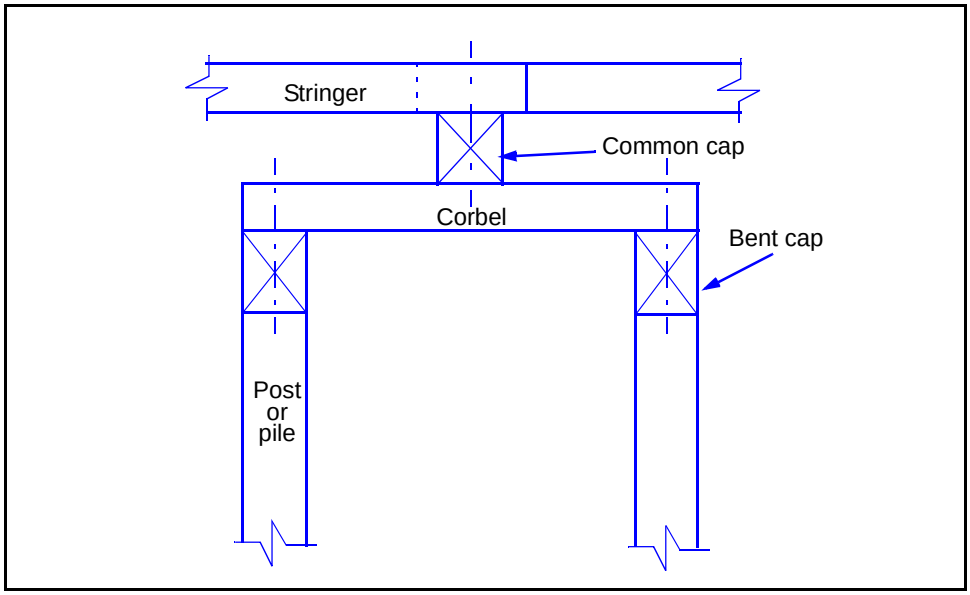

Figure 7-45. Two-Bent Pier With Common Cap

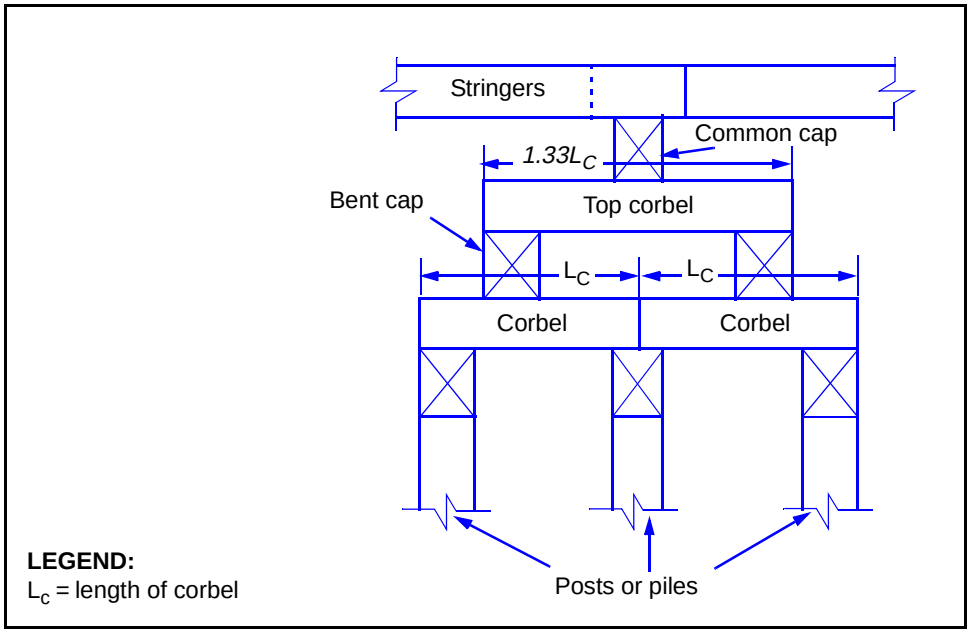

Figure 7-46. Three-Bent Pier With Common Cap

Cap Design

7-121. The minimum size for bent caps is 6 x 8 inches. The cap must also be at least as wide as the piles or posts supporting it. Check the bearing stress between the cap and the posts to ensure that the bearing stress does not exceed the maximum allowable stress for timber *(Table C-1, pages C-3* through *C-6)*. Compute as follows:

- **Cap design load.**

$$P = P_{DL} + \frac{P_{LL} N_p}{4} \quad (7\text{-}97)$$

where—

P = *total design load of the cap, in kips*
P_{DL} = *estimated substructure dead load of the pier, in kips (equation 7-56)*
P_{LL} = *estimated substructure live load of the pier, in kips (equation 7-57)*
N_p = *number of piles in the bent*

- **Actual bearing stress.** The actual bearing stress must not exceed the allowable bearing stress for the weakest member in the system. If the allowable bearing stress is exceeded, correct the system by adding more piles or posts or by adding timbers on the sides of the supports *(Figure 7-47)*.

$$F_B = \frac{P}{N_p A} \quad (7\text{-}98)$$

where—

F_B = *actual bearing stress of the cap, in ksi*
P = *total design load of the cap, in kips (equation 7-97)*
N_p = *number of piles in the bent*
A = *cross-sectional area of the pile, in square inches (Table C-5, page C-10)*

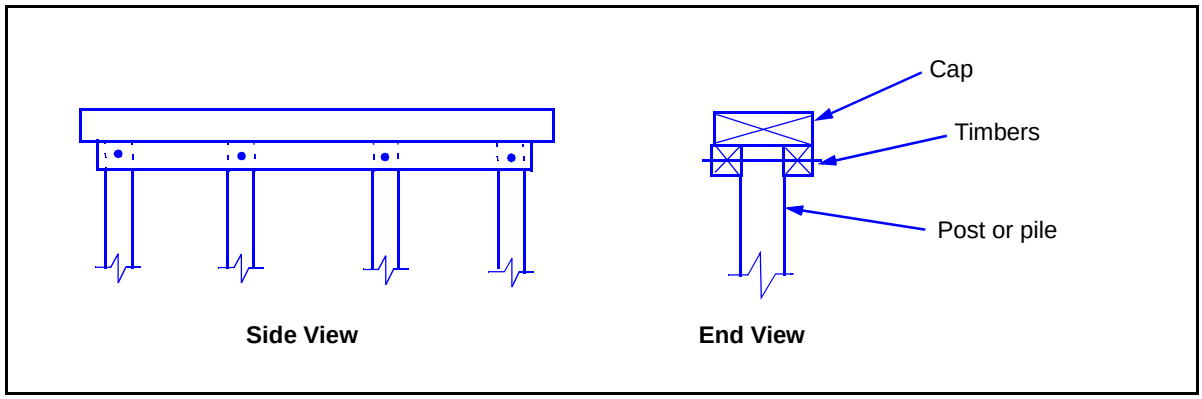

Figure 7-47. Timbers Added to Reduce Bearing Stress

- **Cap depth.** The depth of the cap must equal or exceed one-fifth of the spacing between the piles.

$$d_c \geq \frac{S_p}{5} \quad (7\text{-}99)$$

where—

d_c = *cap depth, in feet*
S_p = *pile spacing, in feet (paragraph 7-111)*

Corbel Design

7-122. The corbel design process is different depending on the pier. The corbel design for two- and three-bent piers is discussed below.

7-123. **Two-Bent Pier.** The design length of each corbel equals the center-to-center spacing between bents. The actual corbel length exceeds the design length by a minimum of one cap width so that the corbel will have contact with the full area of each bent cap. Compute the required effective shear area and the required number of corbels as follows:

- **Required effective shear area.**

$$A_{vr} = \frac{P}{2F_v} \quad (7\text{-}100)$$

where—

A_{vr} = *required effective shear area of the corbel system, in square inches*
P = *total design load of the corbel, in kips (equation 7-97)*
F_v = *allowable shear stress of the corbel, in ksi (Table C-1, page C-9)*

- **Required number of corbels.**

$$N_{cb} = \frac{A_{vr}}{A_v} \quad (7\text{-}101)$$

where—

N_{cb} = *required number of corbels*
A_{vr} = *required effective shear area of the cap or corbel system, in square inches (equation 7-100)*
A_v = *effective shear area of the corbel, in square inches (Table C-4, page C-9)*

7-124. Shear normally governs corbel design. If the corbel length divided by the corbel depth is less than or equal to 12, do not consider shear controls and moment. Compute as follows:

- **Total shear.**

$$V = \frac{P}{2} \quad (7\text{-}102)$$

where—

V = *total shear of the corbels, in kips*
P = *total design load, in kips (equation 7-97)*

- **Shear capacity.**

$$v = F_v A_v \quad (7\text{-}103)$$

where—

v = *shear capacity per corbel, in kips*
F_v = *allowable shear stress of the corbel, in ksi (Table C-1, pages C-3 through C-6)*
A_v = *effective shear area of the corbel, in square inches (Table C-4, page C-9)*

- **Number of corbels (shear).**

$$N_{cb} = \frac{V}{v} \quad (7\text{-}104)$$

where—

N_{cb} = *number of corbels*
V = *total shear of the corbels, in kips (equation 7-102)*
v = *shear capacity per corbel, in kips (equation 7-103)*

- **Spacing.**

$$S_{cb} = \frac{b_R}{N_{cb} - 1} \quad (7\text{-}105)$$

where—

S_{cb} = *center-to-center spacing of the corbel, in feet*
b_R = *curb-to-curb roadway width, in feet*
N_{cb} = *number of corbels (equation 7-104)*

- **Moment.** If moment governs the corbel design, compute as follows:

$$m = \frac{PL_{cb}}{4} \quad (7\text{-}106)$$

where—

m = *moment, in kip-feet*
P = *corbel design load, in kips (equation 7-97)*
L_{cb} = *corbel length, in feet (paragraph 7-123)*

- **Number of corbels (moment).** First, compute for the required section modulus:

$$S_{req} = \frac{m12}{F_b} \quad (7\text{-}107)$$

where–

S_{req} = *required section modulus*
m = *moment, in kip-feet (equation 7-106)*
F_b = *allowable bending stress of the corbel, in ksi (Table C-1)*

then, compute for the number of corbels:

$$N_{cb} = \frac{S_{req}}{S} \quad (7\text{-}108)$$

where—

N_{cb} = *number of corbels per bent*
S_{req} = *required section modulus (equation 7-107)*
S = *section modulus of one corbel (Table C-4)*

- **Spacing.**

$$S_{cb} = \frac{b_r 12}{N_{cb} - 1} \quad (7\text{-}109)$$

where—

S_{cb} = *corbel spacing, in inches*
b_r = *roadway width, in feet*
N_{cb} = *number of corbels (equation 7-108)*

7-125. **Three-Bent Pier.** A three-bent pier requires two corbel systems *(Figure 7-46, page 7-61)*, each designed separately. The design length equals the center-to-center bent spacing. The length of the top corbel equals one and one-third times the length of the bottom corbel. The bottom corbels are not continuous; they are simply supported at the center bent. See *equations 7-104* and *7-105* for top corbels. If the ratio of 4 times the design length to 3 times the pile depth is less than or equal to 12, shear governs. If moment governs, see *equations 7-107* and *7-108*.

Common-Cap Design

7-126. The minimum size for a common cap is 6 x 8 inches. Compute the common-cap width and depth as follows:

- **Common-cap width.**
  - **Top common cap.** Compute the minimum width of the common cap for a two-bent pier or the top common cap of a three-bent pier as follows:

$$b_c = \frac{p}{2N_{cb}b_{cb}F_c} \quad (7\text{-}110)$$

where—

b_c = *cap or sill width, in inches*
P = *total load, in kips (equation 7-97)*

N_{cb} = *number of corbels in the top bent (equation 7-108)*
b_{cb} = *corbel width of the top cover, in inches*
F_c = *allowable bearing of the supports perpendicular to the grain of the support material (Table C-1, pages C-3 through C-6)*

- **Bottom common cap.** Compute the minimum width of the bottom common cap of a three-bent pier as follows:

$$b_c = \frac{P}{N_{cb} b_{cb} F_c} \quad (7\text{-}111)$$

where—

b_c = *minimum width of common cap, in inches*
P = *corbel design load, in kips (equation 7-97)*
N_{cb} = *number of corbels in the lower level (equation 7-108)*
b_{cb} = *corbel width in the lower level, in inches*
F_c = *allowable bearing of the cap or corbel, perpendicular to the grain of the cap or corbel material, in kips (Table C-1)*

- **Common-cap depth.** The depth of any common cap must equal or exceed one-fifth the spacing of the corbels supporting it. Compute as follows:

$$d_c > \frac{S_{cb}}{5} \quad (7\text{-}112)$$

where—

d_c = *cap depth, in inches*
S_{cb} = *corbel spacing, in inches (equation 7-109)*

TIMBER- AND STEEL-FRAMED TOWERS

7-127. The AFCS contains design drawings for timber- and steel-framed towers.

CONCRETE PIERS

7-128. Concrete piers may be constructed of either mass or reinforced concrete. Mass-concrete piers can be built in about the same amount of time as reinforced concrete piers but are not economical because they require such large quantities of concrete. Since concrete piers are normally used in permanent bridges, this FM does not go into detail on their design.

SHALLOW FOUNDATIONS

7-129. When shallow bedrock prevents pile installation, use some other type of specially designed shallow foundation. The paragraphs below describe a few shallow piers (other than standard timber and steel piers) that have been successful in the field.

Rock Footings

7-130. In dry gaps or shallow streambeds, construct rock footings as shown in *Figure 7-48*. Hold the rocks in place by driving steel pickets into the soil. Dump the rocks into the steel enclosure and level them at the proper elevation. To provide a smooth surface for timber or steel piers, place a layer of concrete over the rocks. Settlement may be a problem since the rocks have to be placed directly on mud. In this case, put a surcharge of heavy material on the rock footing to induce settling before leveling and capping. After the footing settles, remove the surcharge and level and cap the rock footing. The total load acting on the footing (including the weight of the footing itself) divided by the planned area of the footing must not exceed the bearing capacity of the local soil.

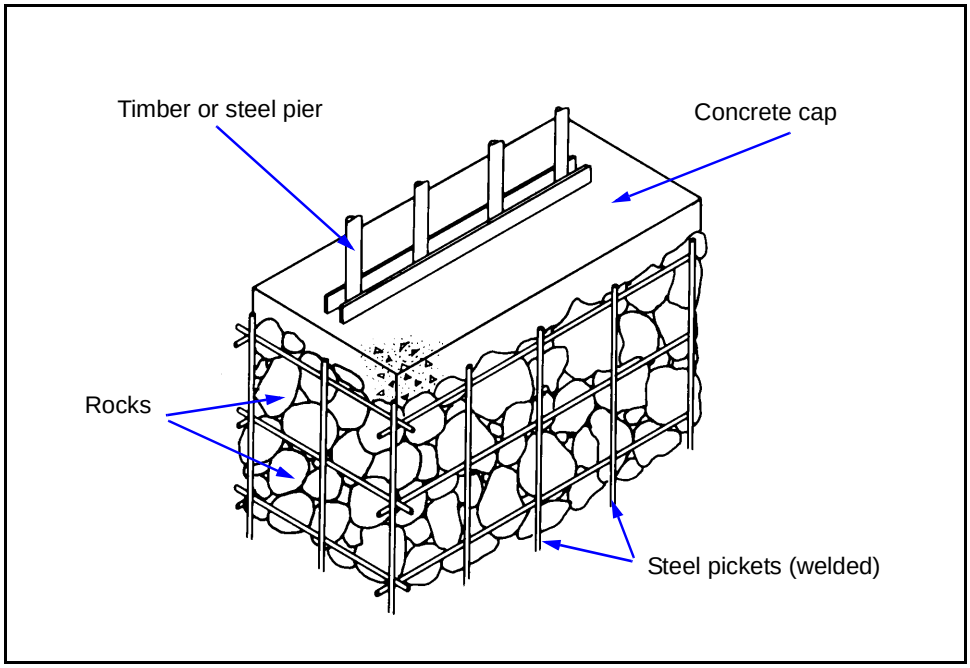

Figure 7-48. Rock Footing

Concrete Footings

7-131. In shallow watercourses with firm beds, use a concrete footing. Place the forms and anchor them with weights so that they will not float away. Then use a tremie to place concrete in the forms. Place the footing only when the temperature of the water will not fall below 45°F during the curing process.

Steel or Timber Footings on Rock or Concrete

7-132. Embed steel or timber posts directly in the concrete or on top of the rock or concrete footings.

Steel-Culvert Pipe

7-133. Steel-culvert pipes can serve as expedient bridge piers. Fill the pipes with rocks, cap them, and place them on edge. At least two rows of pipe are needed, with both lateral and longitudinal bracing to provide stability. This type of pier requires a cap and corbel system. Weld the steel pipe together as rigidly as possible to provide one continuous pipe. Piers of this type should not exceed 12 feet in height and can be placed on a rock or concrete footing. Do not use concrete pipes since sections are short and tend to be unstable when stacked.

FOOTINGS AND GRILLS

7-134. The AFCS contains descriptions on the use of footings and grills as special foundations for steel or timber towers. See *FM 5-277* for more information on grills.

CULVERTS

7-135. Reinforced concrete and corrugated-metal culverts are often used in shallow or intermittent watercourses in place of bridges. See *FM 5-430-00-1* for information on culvert designs in connection with drainage.

Chapter 8

Suspension-Bridge Design

Suspension bridges can span distances from 2,000 to 7,000 feet, which is far longer than any other kind of bridge. They also tend to be the most expensive to build. True to their name, suspension bridges suspend the roadway from huge main cables, which extend from one end of the bridge to the other. These cables rest on top of high towers and are secured at each end by anchorages. The towers enable the main cables to be draped over long distances.

DESCRIPTIONS

8-1. Suspension bridges have two basic systems–main cables supported by towers at each end over the obstacle and a roadway suspended from the main cables *(Figure 8-1, page 8-2)*. Suspender cables support the floor beams, which support the stringers that support the roadway. Stiffening trusses further spread the live load to the suspenders. Suspension-bridge design requires analysis of the following items:

- Load to be carried.
- Panel length.
- Floor beams and stringers.
- Stiffening trusses.
- Dead load.
- Suspenders.
- Main cables.
- Towers.
- Tower bracing and backstays.
- Anchorages.

UNSTIFFENED BRIDGES

8-2. Unstiffened bridges consist of floors, without stiffening trusses or girders, suspended from cables. These bridges are suitable only where live load or wind load can never cause serious deformation of the cable. An example of this type of bridge would be a footbridge, where the live load is very light. Other examples are structures with a large dead load but insignificant live load.

STIFFENED BRIDGES

8-3. Stiffened bridges have flexible cables that are stiffened by suspended girders or trusses. These bridges minimize local changes in roadway slope due

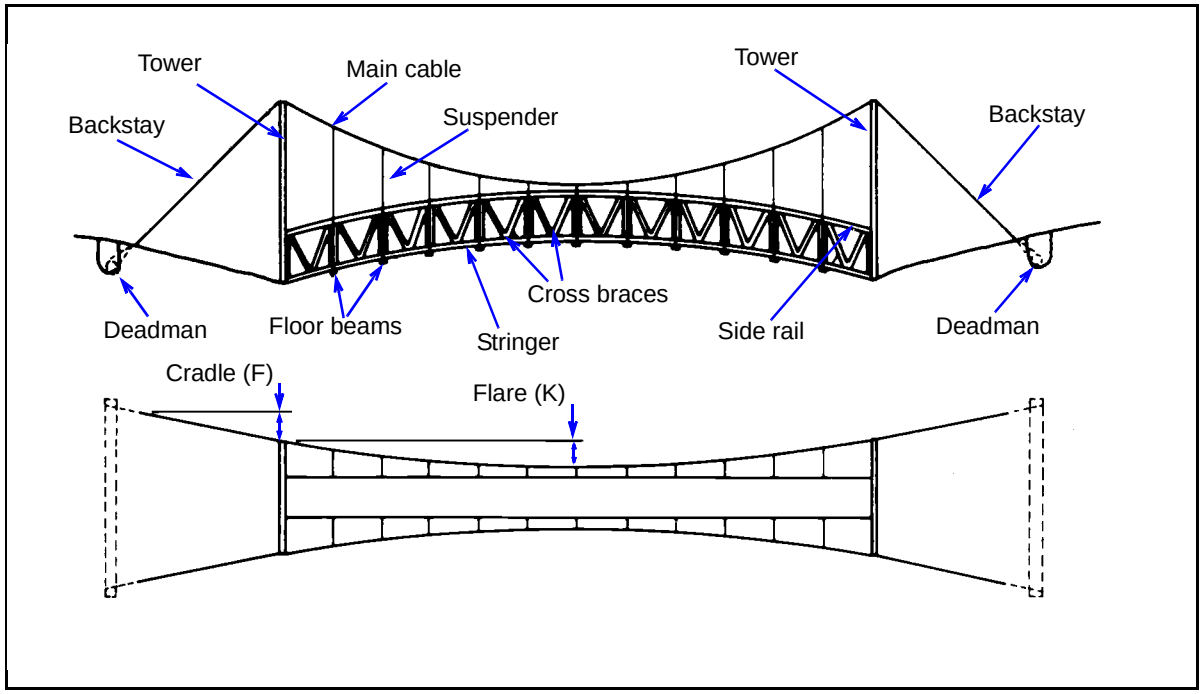

Figure 8-1. Suspension Bridge

to live loads. They are constructed by framing the floor beams of the floor system into stiffening trusses and supporting these trusses with hangers running to the cables.

SELF-ANCHORED BRIDGES

8-4. Self-anchored bridges are supported on vertical foundations, and no anchor cable is required. The horizontal force on the main cable is exerted by endwise thrusts in the stiffening girder.

MULTIPLE-SPAN BRIDGES

8-5. Multiple-span bridges are a combination of two or more adjoining suspension bridges sharing a common anchorage. The towers of these bridges are connected by a tie cable to restrain movement of the tower tops from unbalanced live loads.

BRIDGE SITES

8-6. The selection of a bridge site is very critical. Factors to consider when determining a bridge site are the tower spacing, the bridge clearance, and the work area.

TOWER SPACING

8-7. Keep the distance between towers as short as possible (not more than 400 feet). Also, keep the towers at the same elevation if possible. Long spans with a considerable difference in tower elevations require large wire ropes and

increase material-acquisition problems. Longer spans also may increase cable tension, requiring heavier towers and anchorages and increasing construction effort. There should be minimal differences in the tower and the bank elevations.

BRIDGE CLEARANCE AND WORK AREAS

8-8. Avoid high points between towers for adequate clearance due to cable sag. When determining clearance, consider sag based on anticipated loads. Select a fairly level space around each tower. For clearance purposes, select a sharp slope just past the loading area.

DESIGN FACTORS

8-9. Factors to consider when designing a suspension bridge are the sag ratio, the camber, the cradle and flare, and the backstay slope. *Figure 8-2* shows the suspension-bridge design factors.

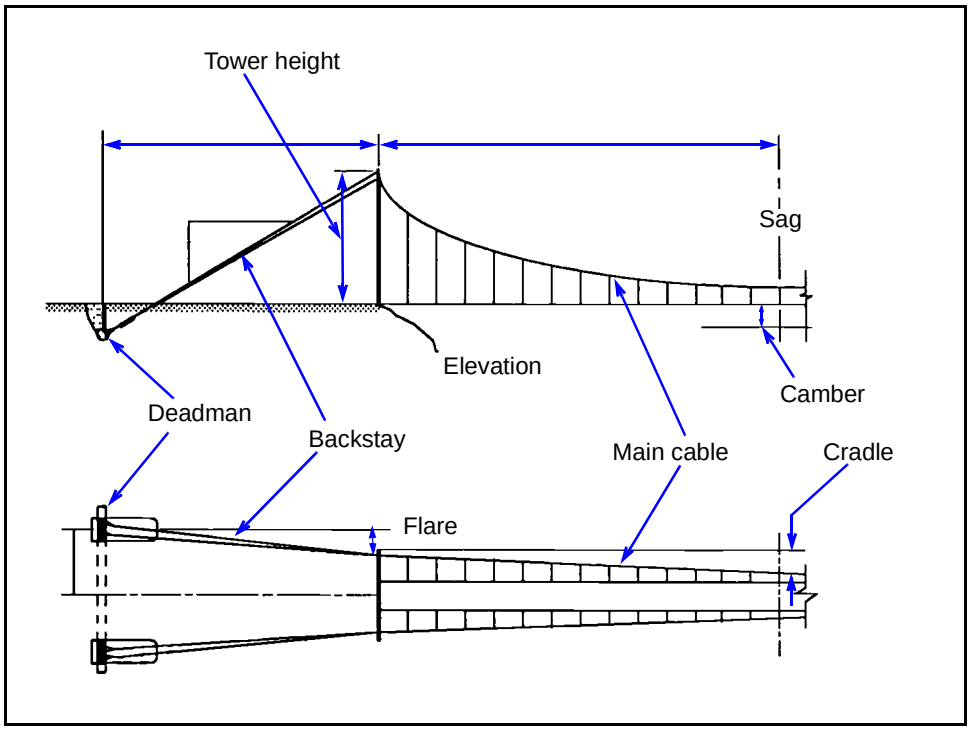

Figure 8-2. Suspension-Bridge Design Factors

SAG RATIO

8-10. Sag controls the length and stability of the bridge. The sag ratio varies from 5 to 16.66 percent. The sag ratio is computed by dividing the sag by the span length. If the main cables have a flat curve or low sag ratio, the bridge has more vertical stability but the cable stress is high and strong anchorages are required. If the sag ratio is high, the cable is under less stress and anchorages may be placed closer to the towers.

CAMBER

8-11. Camber is the vertical distance between the top of the floor beam at the midspan and a straight line drawn between the tops of the tower sills. Camber allows for deflection of a bridge when loaded. The camber should be equal to 0.67 percent of the span length.

CRADLE AND FLARE

8-12. Cradle is the lateral distance from the midpoint of one of the main cables to a straight line drawn between its support points on the towers. Flare is the lateral distance from the cable support on the tower to the anchorage. The cradle should be equal to 1.25 percent of half the span length. The flare should be between 2.5 and 3.5 percent of the horizontal backstay length. Both cradle and flare help steady a bridge.

BACKSTAY SLOPE

8-13. Backstay slope is the ratio of the vertical difference between the deadman and the tower support of the main cable to the difference in elevation between the deadman and the tower. The angle of the backstay and main cable may be the same. If so, the stress will be equal on both sides of the tower. The backstay slope is usually a 1:2.5 ratio.

LIVE LOAD

8-14. Use either a uniform or concentrated load condition when designing suspension bridges. If five or more concentrated loads are carried on the bridge at one time, consider this load as a uniform load condition to simplify the design process. Use the dead and live loads when designing floor and side-rail systems. Use the dead, live, and impact loads when designing the cable system. Assume the impact load to be 100 percent of the live load.

PANELS

8-15. *Figure 8-3* shows a typical suspension-bridge panel. A truss helps spread the load over several panels and stabilizes a bridge. When the truss is omitted, suspend the roadway and posts from the main cables.

LENGTH

8-16. Assume a panel length between 10 and 15 feet to start the design process. A 10-foot panel is usually a practical length. Number the panels symmetrically from zero at the center suspender to the number of panels needed to reach the towers (*Figure 8-4)*. A design is simplified if there is an even number of panel points, thus dividing the bridge exactly in half. Otherwise, number the panel points by halves (0.5, 1.5, 2.5, and so forth), beginning with the panel closest to the center span.

STRINGERS

8-17. Use *Table 8-1, page 8-6,* to select the nominal stringer size. This table assumes uniform loading and uses an allowable bending stress of 1 ksi. If

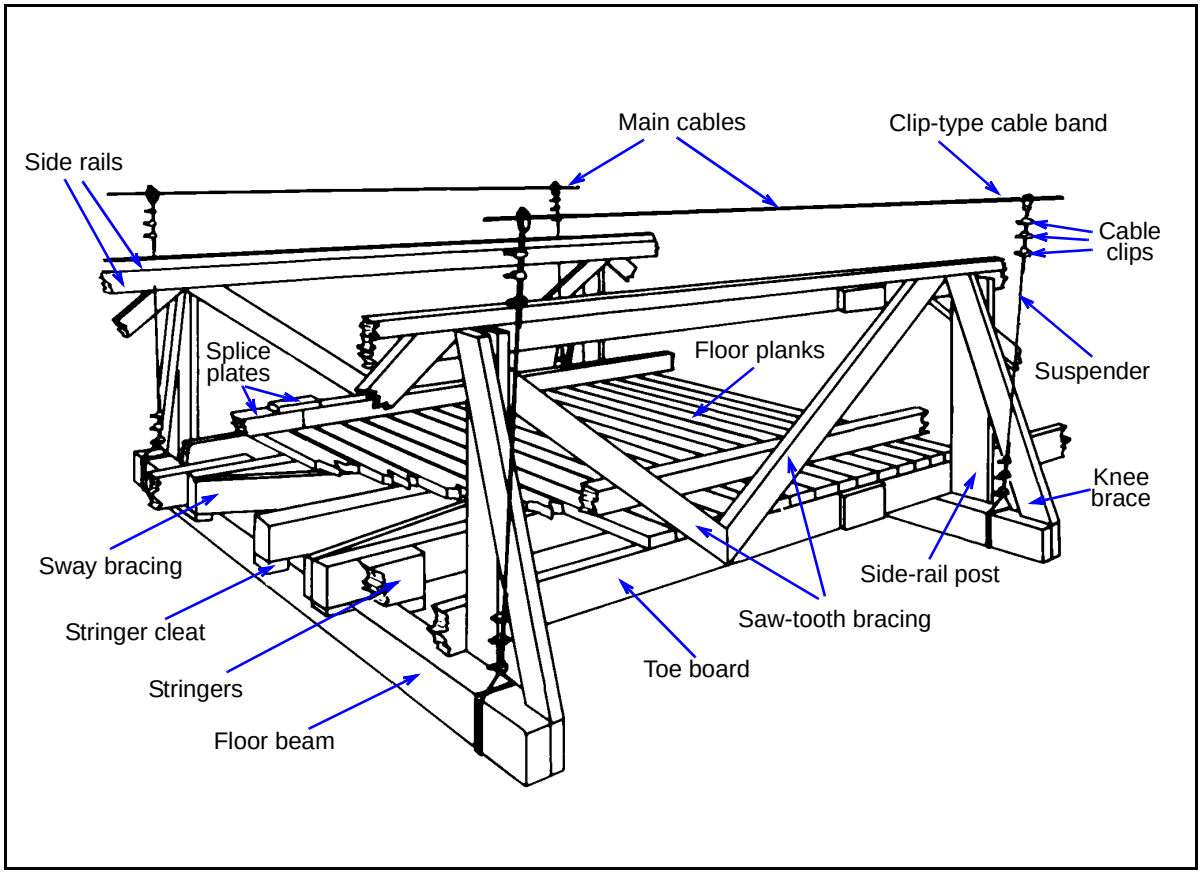

Figure 8-3. Typical Suspension-Bridge Panel

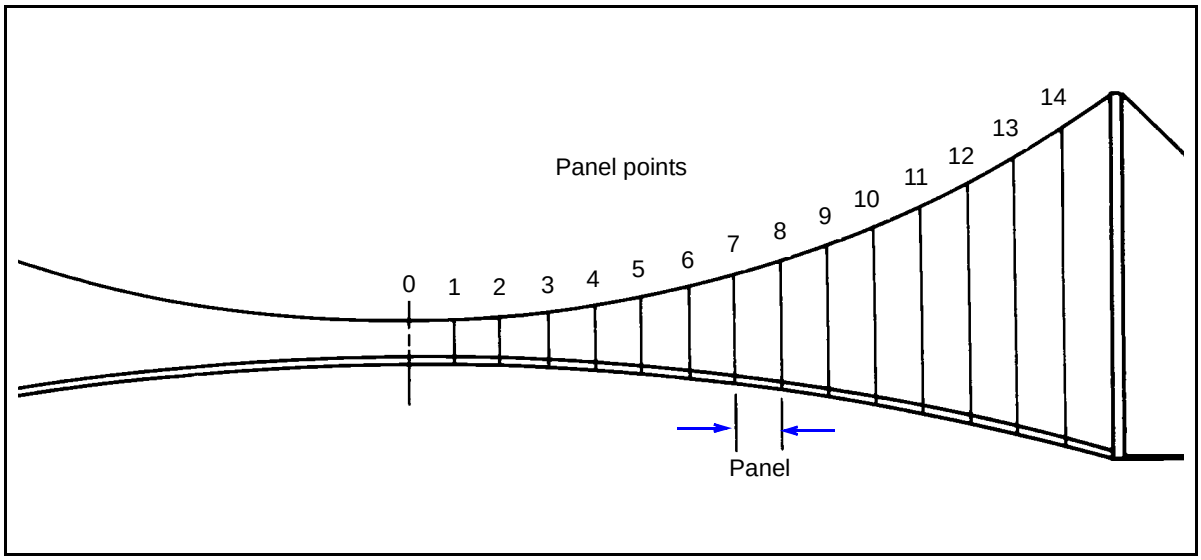

Figure 8-4. Panel Points

designing a bridge for a concentrated load, use half the load value selected from this table. For bending stresses other than 1 ksi, multiply the load in *Table 8-1* by the new allowable bending stress. The allowable bending stress for timber is shown in *Table C-1, pages C-3* through *C-6*.

Table 8-1. Properties of Wooden Beams

1	2	3	4	5
Nominal Size (in)	Actual Size (in)	Area of the Section (sq in)	Weight per Linear Foot (w)[1]	Maximum Safe Uniform Load (f_b)[2]
4 x 6	3 5/8 x 5 5/8	20.4	5.66	12,740
6 x 6	5 1/2 x 5 1/2	30.3	8.40	18,490
4 x 8	3 5/8 x 7 1/2	27.2	7.55	22,700
6 x 8	5 1/2 x 7 1/2	41.3	11.40	34,400
8 x 8	7 1/2 x 7 1/2	56.3	15.60	46,900
6 x 10	5 1/2 x 9 1/2	52.3	14.50	55,200
8 x 10	7 1/2 x 9 1/2	71.3	19.80	75,200
10 x 10	9 1/2 x 9 1/2	90.3	25.00	95,300
6 x 12	5 1/2 x 11 1/2	63.3	17.50	80,000
8 x 12	7 1/2 x 11 1/2	86.3	23.90	110,200
10 x 12	9 1/2 x 11 1/2	109.3	30.30	139,600
12 x 12	11 1/2 x 11 1/2	132.3	36.70	169,000

NOTES:
1. The weight per linear foot (w) equals 40 pounds per cubic foot.
2. Based on the bending of a 1-foot span, f_b equals ksi.

FLOOR BEAMS

8-18. *Table 8-2* lists floor-beam sizes for various loading conditions. Design the floor beams so that the suspenders wrap around the floor beams. Extend the beams beyond the width of the roadway so that knee braces can be added to support the side-rail posts.

Table 8-2. Floor-Beam Sizes

Load	Floor-Beam Cross Section (in)
Foot troops with full packs	4 x 6
1/4-ton truck, normal load	6 x 6
3/4-ton truck, normal load	8 x 8

PLANKS

8-19. Use 2-inch planks for footbridges. Use 3-inch planks for light vehicle bridges.

SIDE RAILS AND POSTS

8-20. Side rails are not necessary on very light or short footbridges. As the span and the load increase, add side rails to stabilize the bridge. Use 2- x 4-inch posts and a single side rail for light footbridges. Use 3- x 6-inch posts with double side rails and a toe board for vehicle bridges. Make the posts about 42 inches long for safety and convenience.

BRACING

8-21. Saw-toothed bracing helps stiffen the truss and spread the load over several panels. Use 2- x 6-inch lumber for saw-toothed bracing. Knee bracing holds the posts and floor beams. Extend the floor beams to allow for the knee braces. Use 2- x 4-inch material. Sway bracing helps stabilize the bridge laterally. On light bridges, heavy-gauge wire with rack sticks *(Figure 8-5)* is sufficient. Heavier bridges require timber sway bracing *(Figure 8-6, page 8-8)*.

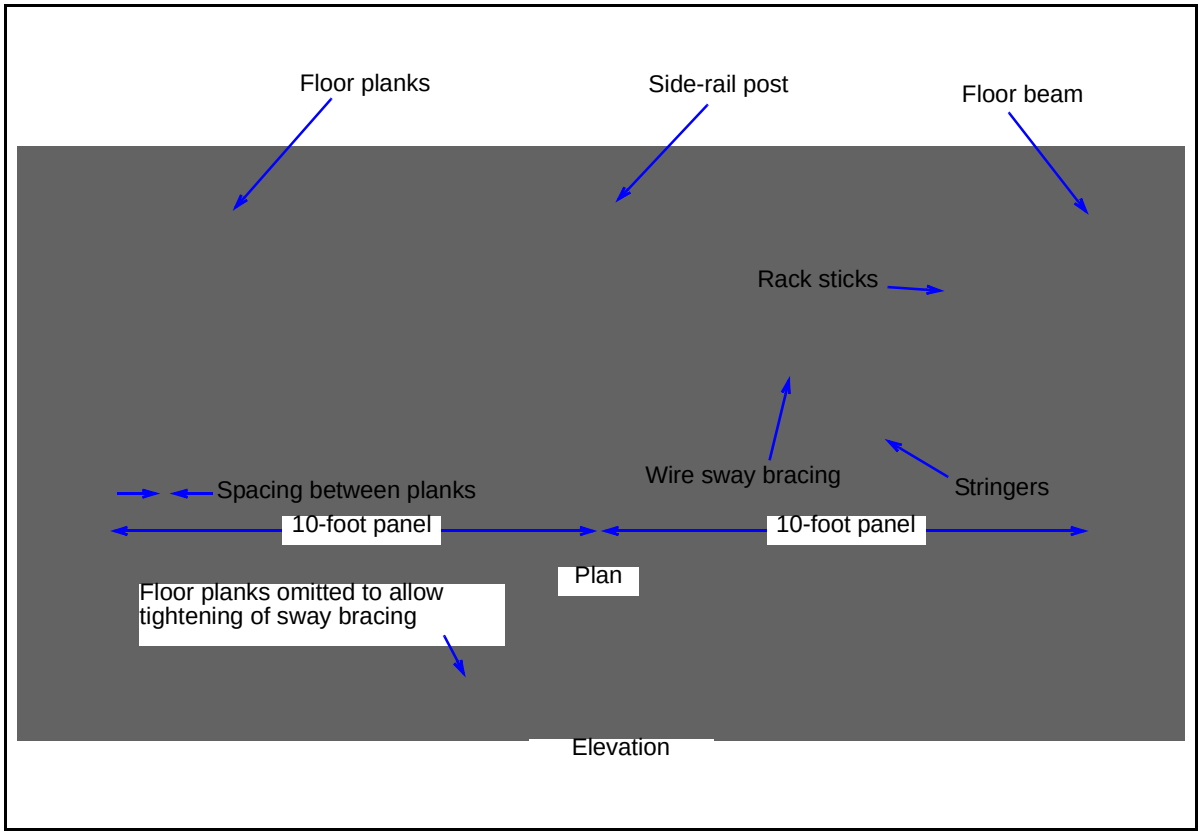

Figure 8-5. Wire Sway Bracing

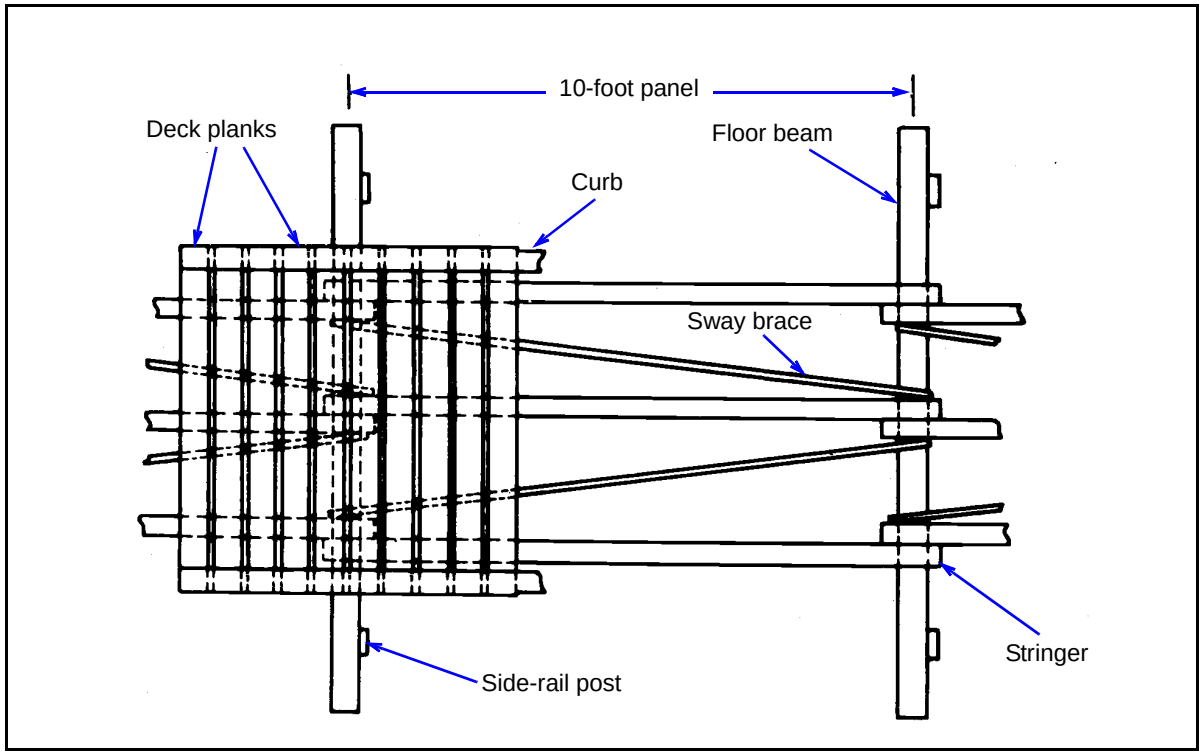

Figure 8-6. Timber Sway Bracing

DEAD LOAD

8-22. After selecting the truss and floor system, determine the dead load. To find the dead load of a panel, add the weight of the components (suspenders, floor beam, deck planks, stringers, toe boards, side-rail posts, knee braces, side rails, curbs, and clips). The dead load is measured in kips per panel.

SUSPENDERS

8-23. Suspenders carry the live, dead, and impact loads. Assume that the live load equals the gross weight of the traffic using the bridge. Determine the dead load according to *paragraph 8-22*. For design purposes, the impact load equals the live load. Use *Table 8-1, page 8-6*, and a safety factor of 5 to determine the allowable load per suspender. Compute as follows:

$$P_s = \frac{P}{N} \qquad (8\text{-}1)$$

where—

P_s = *load per suspender, in kips*

P = *total load, in kips. The total load is the dead-load weight of all components plus the live-load weight designed for plus impact. Impact is the same as the live-load weight.*

N = *number of suspenders*

8-24. The effective suspender length is the distance between the main cable and the floor beam. Add sufficient length to each suspender to accommodate connections at each end. Compute the suspender length as follows:

$$d = L_{es} + \left(\frac{n}{n_t}\right)^2 (c + y_s) \quad (8\text{-}2)$$

where—

d = *distance between the main cable and the floor beam, in feet*
L_{es} = *effective length of the center suspender, in feet*
n = *panel point of the suspender (paragraph 8-16)*
c = *cable camber, in feet (paragraph 8-11)*
y_s = *cable sag (Figure 8-2, page 8-3)*
n_t = *panel point of the tower (paragraph 8-16)*

8-25. An additional 5 to 6 feet is adequate for connections with the main cable and the floor beams. The loop must include a thimble to prevent the main cable from shearing the suspender cable.

MAIN CABLES

8-26. Use *equations 8-3* through *8-10* or *Table 8-3, page 8-10*, to design the main cables. Assume a cable size to determine the dead load. Determine the cable tension and adjust the cable to accommodate the tension. Redetermine the cable tension (based on the new cable size) and check the cable's strength. Continue this process until a suitable cable size can be selected. Design a main cable as discussed below.

NORMAL DESIGN

8-27. The normal-design process is as follows:

- **Loads.**

$$W_c = \frac{P}{L} \quad (8\text{-}3)$$

where—

W_c = *weight per foot of main cable, in kpf*
P = *total load, in kips (paragraph 8-23)*
L = *span length, in feet*

- **Horizontal tension.**

$$T = \frac{W_c(L^2)}{8y_s} \quad (8\text{-}4)$$

where—

T = *horizontal tension, in kips*
W_c = *weight per foot of main cable, in kips (equation 8-3)*
L = *span length, in feet*
y_s = *cable sag, in feet (paragraph 8-10)*

Table 8-3. Cable-Design Data

1	2	3	4
Sag Ratio (y_s / L)	**Tension Factor[1] (x_t)**	**Tension Factor[2] (x_t)**	**Length Factor[3] (x_t)**
5	2.55	2.55	1.007
7	2.14	2.14	1.010
8	1.64	1.64	1.013
9	1.48	1.49	1.017
10	1.35	1.36	1.026
11	1.24	1.26	1.031
12	1.16	1.18	1.037
13	1.08	1.11	1.043
14	1.02	1.05	1.050
15	0.97	1.01	1.057
20	0.80	0.88	1.098

NOTES:

1. When the weight per foot of span is known, $T' = W_s(x_t)$.

2. When the weight per foot of cable is known, $T' = W_s(x_t)$.

3. The suspender length is $L_S = L(x_t)$.

LEGEND:

L = span length, in feet

L_S = suspender length, in feet

T′ = cable tension, in kips

W_S = stringer weight, in kpf

y_S = cable sag

- **Slope.**

$$\theta = tan^{-1}\left(\frac{4y_s}{L}\right) \quad (8\text{-}5)$$

where—

θ = *cable deflection angle*

tan^{-1} = *inverse tangent function*

y_s = *cable sag, in feet (paragraph 8-10)*

L = *span length, in feet*

- **Tension in all cables.**

$$T' = \frac{T}{\cos\theta} \quad (8\text{-}6)$$

where—

T' = *cable tension, in kips*

T = *horizontal tension, in kips (equation 8-4)*

θ = *cable deflection angle (equation 8-5)*

- **Allowable tension in one cable.**

$$T_c = \frac{T'}{N} \quad (8\text{-}7)$$

where—

T_c = *allowable tension per cable, in kips*
T' = *cable tension, in kips (equation 8-6)*
N = *number of cables*

- **Cable length.**

$$L_{ca} = L\left[1 + \left(\frac{8}{3}\right)\left(\frac{y_s}{L}\right)^2\right] \quad (8\text{-}8)$$

where—

L_{ca} = *total cable length, in feet*
L = *span length, in feet*
y_s = *cable sag (paragraph 8-10)*

TABLE METHOD (EXPEDIENT)

8-28. Use *Table 8-3* to determine the cable tension factor and the cable length factor. Locate the appropriate sag ratio on the left-hand side and read to the right to Column 2 or 3, whichever applies. Compute the cable tension, length, and size and the number of cables required as follows:

- **Cable tension.**

$$T' = W_{DL}L(x_t) \quad (8\text{-}9)$$

where—

T' = *cable tension, in kips*
W_{DL} = *dead-load weight of the span (Table 8-3, Column 2) or per foot of cable (Table 8-3, Column 3), in kpf*
L = *span length, in feet*
x_t = *factor from Table 8-3, Column 2 or 3*

- **Cable length.**

$$L_{ca} = L(x_t) \quad (8\text{-}10)$$

where—

L_{ca} = *cable length, in feet*
L = *span length, in feet*
x_t = *factor from Table 8-3, Column 4*

- **Cable size.** Find the tension that all the cables must hold *(equation 8-6)* and the tension in each cable *(equation 8-9)*. Next, find the size of cable or wire rope and its corresponding breaking strength *(Table 8-4, page 8-12)*.

- **Number of cables required.**

$$N = \frac{T_c}{T_s} \quad (8\text{-}11)$$

where—

N = *number of cables required*
T_c = *amount of tension in the main cable due to the bridge load, in kips (equation 8-7)*
T_s = *breaking strength of the cable, in kips (Table 8-4)*

Table 8-4. Cable Properties

Diameter (in)	Improved Plow-Steel (IPS) Rope					
	6 x 7		6 x 19		6 x 27	
	Weight per Foot (lb)	Breaking Strength (tons)	Weight per Foot (lb)	Breaking Strength (tons)	Weight per Foot (lb)	Breaking Strength (tons)
1/4	0.094	2.64	0.10	2.74	0.10	2.59
3/8	0.210	5.86	0.23	6.30	0.22	5.77
1/2	0.380	10.30	0.40	10.80	0.39	10.20
5/8	0.590	15.90	0.63	16.60	0.61	15.80
3/4	0.840	22.70	0.90	23.70	0.87	22.60
7/8	1.150	30.70	1.23	32.20	1.19	30.60
1	1.500	39.70	1.60	42.20	1.55	39.80
1 1/8	1.900	49.80	2.03	53.00	1.96	50.10
1 1/4	2.340	61.00	2.50	65.00	2.42	61.50

EXPEDIENT FIELD DESIGN

8-29. The expedient field design may be necessary. To determine the tension in a cable for a given span and load, use *Table 8-3, page 8-10*, as follows:

- **Column 1.** Find the sag ratio.
- **Column 2.** Use this data when designing suspension bridges to determine the cable tension when a uniform load is suspended along a horizontal span. Multiply the appropriate tension factor in Column 2 by the uniform load and by the span length.
- **Column 3.** Use this data to determine the cable tension in an unloaded cableway. Multiply the weight per foot of cable by the appropriate tension factor in Column 3 and by the length of the cable to obtain the cable tension.

- **Column 4.** Use this data to compute the cable length that is between the supports. Multiply the span length by the length factor in Column 4.

BACKSTAYS

8-30. Backstays are the portions of the main cables that are behind the towers. Ensure that the maximum allowable tension of the cable is not exceeded. Compute the tension in the backstays by multiplying the results of *equation 8-7* by the secant of the horizontal backstay angle. For equal tension in the cables on both sides of the tower, the backstay angle should be as follows:

$$sec = \sqrt{1 + 16\left(\frac{y_s}{L}\right)^2} \qquad (8\text{-}12)$$

where—

sec = *secant of the cable deflection angle*
y_s = *cable sag, in feet (paragraph 8-10)*
L = *span length, in feet*

TOWERS

8-31. In most cases, construct towers at the site. After determining the type of installation and the cable sag, determine the tower height from the field profile. Keep towers as low as possible to simplify the design and construction. The main consideration is the timber size required. *Figure 8-7, page 8-14,* shows examples of improvised towers. Compute the tower height as follows:

$$h = L(y_s + c) + L_{cs} \qquad (8\text{-}13)$$

where—

h = *tower height, in feet*
L = *span length, in feet*
y_s = *cable sag, in feet (paragraph 8-10)*
c = *camber, as a percentage (paragraph 8-11)*
L_{cs} = *length of center suspender, in feet*

LOADS

8-32. The cable (on both sides of the tower) places horizontal and vertical loads on the tower, depending on the angle of approach. The guy lines resist the horizontal load, placing an additional vertical load on the tower. *Table 8-5, page 8-14,* shows the vertical reactions on the tower for varying sizes of cable, sags, and slopes.

POSTS

8-33. Vertical reactions of the main cables determine the post size of the towers. For simplicity, a 12- x 12-inch post will carry loads of up to 2 1/2-ton trucks. However, use *Table 8-5* and *Table 8-6, page 8-15,* if determining a minimum size. Determine the maximum vertical reaction for a particular sag ratio, slope, tieback, and cable size from *Table 8-5*. Using this value,

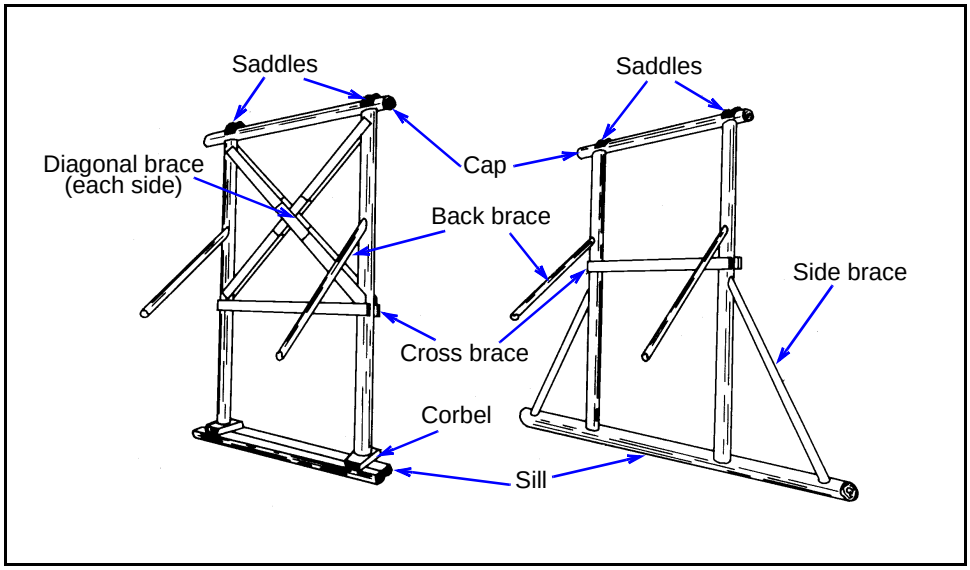

Figure 8-7. Improvised Suspension-Bridge Towers

Table 8-5. Vertical Reactions on Towers

Sag (%)	Slope (%)	Track-Cable Diameter (in)							
		3/8	1/2	5/8	3/4	7/8	1	1 1/8	1 1/4
1:2 Tieback Ratio									
5.0	0	2,020	3,450	5,300	7,570	10,290	13,430	16,900	—
7.5	0	2,170	3,710	5,680	8,130	11,050	14,430	18,150	—
10.0	0	2,320	3,970	6,080	8,690	11,810	15,420	19,400	—
10.0	10	2,450	4,190	6,430	9,120	12,490	16,305	20,520	—
10.0	20	2,700	4,620	7,070	10,120	13,750	17,960	22,950	—
10.0	30	2,930	5,000	7,670	10,970	14,900	19,460	24,480	—
10.0	40	3,180	5,440	8,340	11,930	16,200	21,160	26,630	—
10.0	50	3,420	5,840	8,950	12,800	17,390	22,710	28,570	—
15.0	40	3,420	5,840	8,950	12,800	17,390	22,710	28,570	—
1:4 Tieback Ratio									
5.0	0	1,240	2,120	3,240	4,640	6,298	9,130	—	10,350
7.5	0	1,400	2,380	3,650	5,220	7,090	9,260	—	11,650
10.0	0	1,550	2,650	4,055	5,810	7,890	10,300	—	12,960
10.0	10	1,800	3,080	4,720	6,750	9,171	11,980	—	15,070
10.0	20	2,060	3,510	5,380	7,700	10,460	13,670	—	17,190
10.0	30	2,340	4,000	6,130	8,770	11,915	15,560	—	19,580
10.0	40	2,590	4,430	6,790	9,710	13,190	17,230	—	21,680
10.0	50	2,660	4,550	6,970	9,980	13,550	17,690	—	22,260
15.0	40	2,660	4,550	6,970	9,980	13,550	17,690	—	22,260

determine a post size from *Table 8-6*. The area, the modulus of elasticity, and the allowable stress must be known to determine a post size. Divide the length (in inches) by the minimum depth (in inches). Compute the post capacity by multiplying the allowable stress by the area. Brace the tower and place saddles *(Figure 8-8)* on top of the posts to protect them from the cables. Choose a post with a capacity greater than the maximum vertical reaction.

Table 8-6. Working Stress for Timber Columns

Modulus of Elasticity (E)	Length Divided by Depth							
	15 or Less	20	25	30	35	40	45	50
1,000,000	1,800	1,125	720	500	366	282	222	180
1,100,000	1,800	1,230	790	550	404	309	245	196
1,200,000	1,800	1,350	862	600	441	337	267	216
1,300,000	1,800	1,460	930	650	479	366	290	234
1,400,000	1,800	1,575	1,010	700	515	395	311	252
1,500,000	1,800	1,675	1,080	750	550	422	333	270
1,600,000	1,800	1,800	1,150	800	588	450	356	288
1,700,000	1,800	1,800	1,225	850	624	479	378	306
1,800,000	1,800	1,800	1,295	900	660	507	400	324
1,900,000	1,800	1,800	1,370	950	696	534	422	342
2,000,000	1,800	1,800	1,440	1,000	735	562	444	360

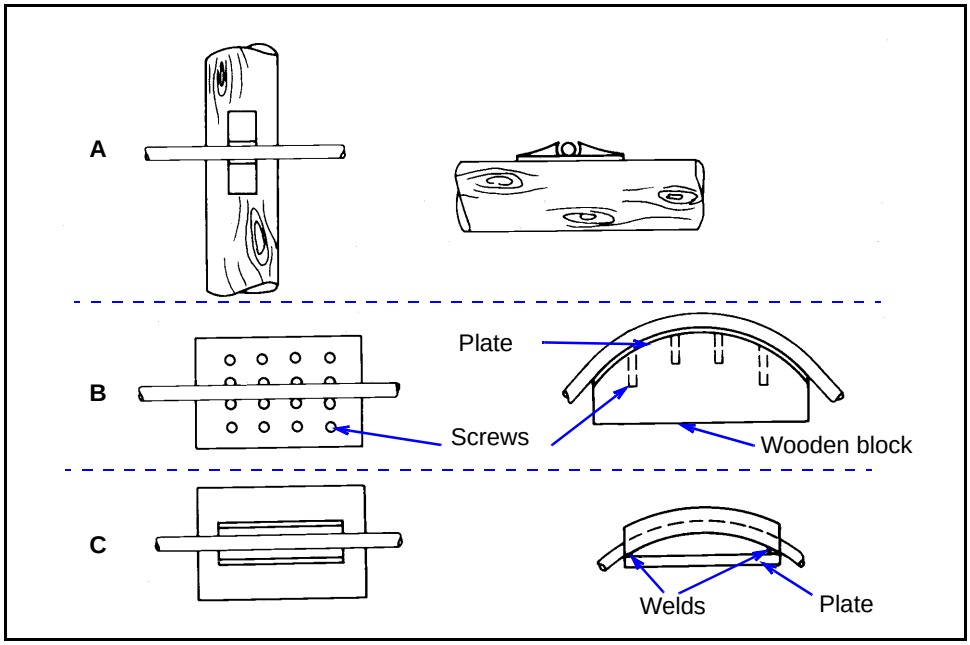

Figure 8-8. Saddles

SADDLES

8-34. Saddles may be required to protect timber cross members when using heavy cables or long spans. Make the saddles from sheet steel or pipe. The strap shown in *Figure 8-8A, page 8-15,* can easily be made from scrap steel. Indent the strap to position and steady the cables. *Figure 8-8B* shows a heavier plate and saddle-block combination. Hold the cable in place by partially driving the nails on either side of the cable. The saddle block and plate can be used on flat timbers to allow for curvature of the cable. *Figure 8-8C* shows a pipe saddle. Use it where several cables or a heavier cable is required. Saddles made from 1/2-inch steel plates are sufficient for cables up to 1 1/2 inches in diameter.

GUY LINES

8-35. Guy lines take up the horizontal forces on the tower. Four 3/8-inch-diameter wire ropes are usually enough to hold a tower in place, provided their slope is 2 feet of run to every foot of rise. This distance provides a margin of safety and allows considerable latitude in placing guy lines at an angle to the direction of the cable.

ANCHORAGES

8-36. For speed and economy, use natural anchors in cableway and tramway installations wherever possible. Other temporary anchors include pickets, rock anchors, holdfasts, and deadmen. Fabricate permanent anchors of steel and set them in concrete or fasten them to permanent structures. Always fasten the guy lines to the anchors as near to the ground as possible so that they leave the anchor as parallel to the ground as possible (except in the case of rock anchors). The wedging action of a rock anchor is strongest under a direct pull and should be set with this effect in mind.

8-37. Trees, stumps, or rocks can serve as natural anchors for expedient work in the field. Avoid using a rotten tree or stump or a dead tree as an anchor. It is always advisable to lash the first tree or stump to a second one to provide added support. A transom *(Figure 8-9)* provides a stronger anchor than a single tree. When using rocks as natural anchors, examine the rocks carefully to be sure that they are large enough and firmly embedded in the ground. An outcropping of rock or a heavy boulder lying on the ground will serve as a satisfactory anchor. See *FM 5-125* for more detail on anchors.

PICKET HOLDFAST

8-38. One factor in the strength of a picket holdfast is the holding power of the ground. Strengthen the holdfast by increasing the surface area of the pickets against the ground. Drive two or more pickets into the ground and lash them together to form a stronger holdfast than a single picket. Make a multiple-picket holdfast as follows:

- Drive round pickets (at least 3 inches in diameter and 5 feet long) about 3 feet into the ground, spaced 3 to 6 feet apart in line with the guy line *(Figure 8-10A).*

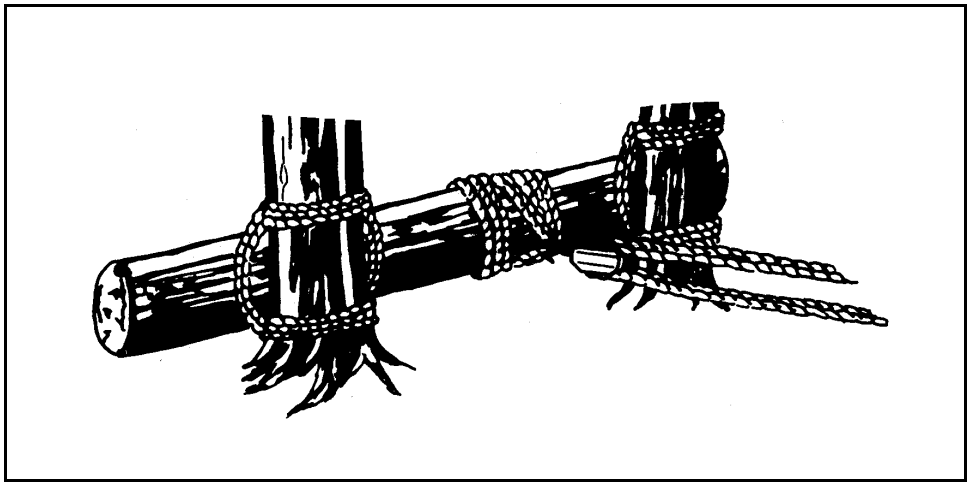

Figure 8-9. Transom

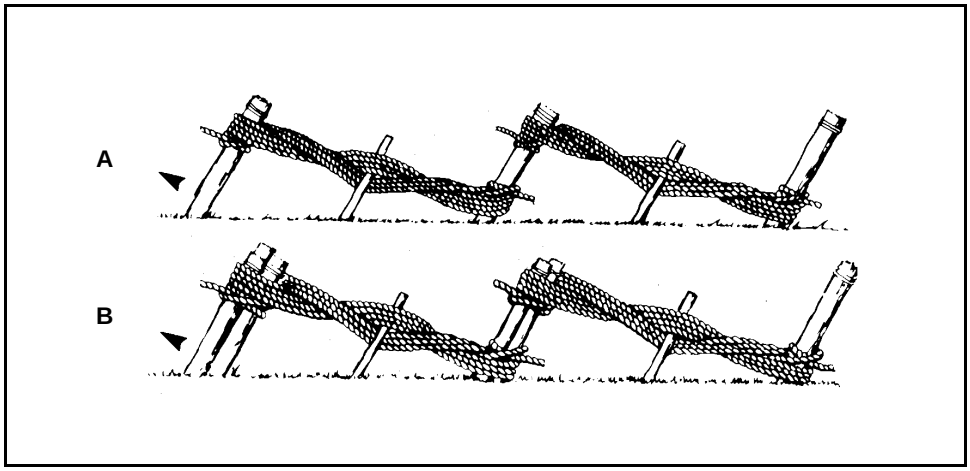

Figure 8-10. Picket Holdfasts

- Slope the pickets about 15 degrees from the vertical, opposite the direction of the pull.
- Tie a fiber rope to the first picket with a clove hitch, and take four to six turns around the two pickets from the bottom of the second picket to the top of the first. Fasten the rope to the second picket with a clove hitch just above the turns. Pass a stake between the rope turns.
- Tighten the rope by twisting the stake and then drive the stake into the ground.
- Place a similar lashing between the second and third pickets. If using wire rope for lashing, make only two complete turns around each pair of pickets. If neither fiber nor wire rope is available for lashing, nail boards between the pickets, from the top of the front picket to the bottom of the second picket.

8-39. The main strength of a multiple-picket holdfast is in the strength of the first, or front, picket. To increase the surface area of the first picket against the ground, drive three or four pickets into the ground close together. Lash this picket group to a second picket group, and lash the second group to a third picket group *(Figure 8-10B, page 8-17)*. Ash pickets (installed as outlined above) should withstand the following pulls in undisturbed, loamy soils:

- Single picket–700 pounds.
- 1-1 picket holdfast combination–1,400 pounds.
- 1-1-1 picket holdfast combination–1,800 pounds.
- 2-1 picket holdfast combination–2,000 pounds.
- 3-2-1 picket holdfast combination–4,000 pounds.

COMBINATION HOLDFAST

8-40. For heavy loading of an anchor, spread the load over the largest possible area by increasing the number of pickets. A combination holdfast has four or five multiple-picket holdfasts (parallel to each other) with a heavy log resting against the front pickets to form a combination log-picket holdfast *(Figure 8-11)*. Fasten the guy line or anchor sling to the log that bears against the pickets. The log should bear evenly against all pickets to obtain maximum strength. The strength of the log will affect the strength of the combination as much as the strength of the individual picket holdfasts. Carefully select the timber to stand the maximum pull on the line without appreciable bending. A steel cross member will serve the same function, forming a combination steel-picket holdfast *(Figure 8-12)*.

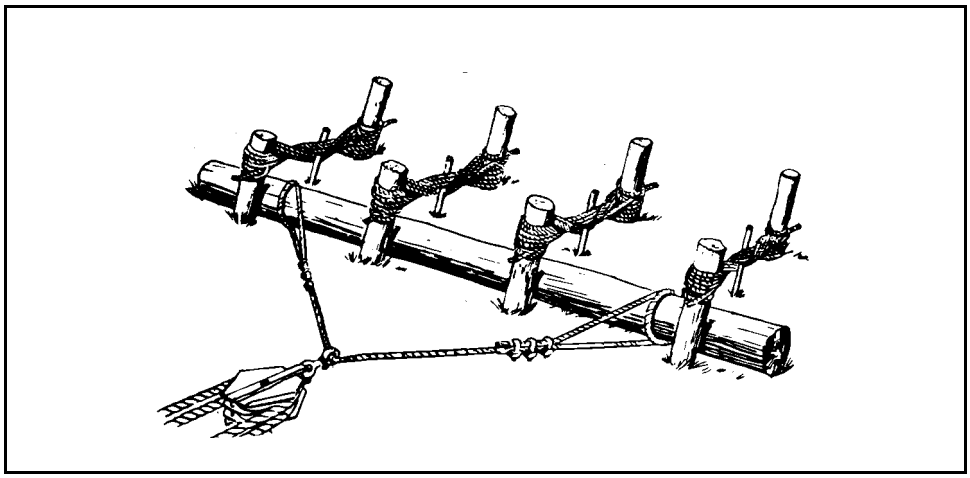

Figure 8-11. Combination Log-Picket Holdfast

ROCK ANCHOR

8-41. A rock anchor *(Figure 8-13)* has an eye on one end. The other end is threaded and has a nut, an expanding wedge, and a stop nut on it. Insert the threaded end of the rock anchor in the hole, with the nut clear of the wedge. After placing the anchor, insert a crowbar through the eye of the rock anchor

and twist the crowbar. Doing this causes the threads of the rock anchor to draw the nut up against the wedge, forcing the wedge out against the sides of the hole in the rock.

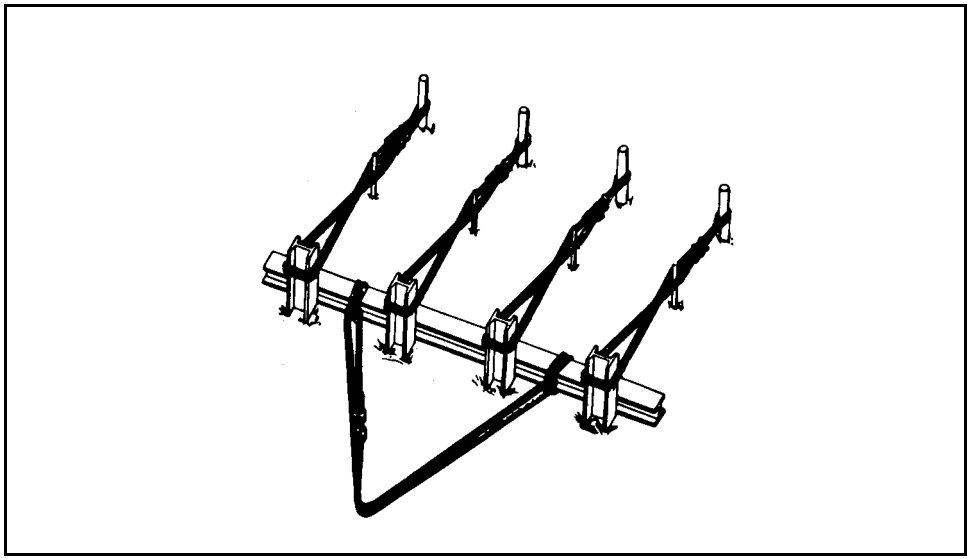

Figure 8-12. Combination Steel-Picket Holdfast

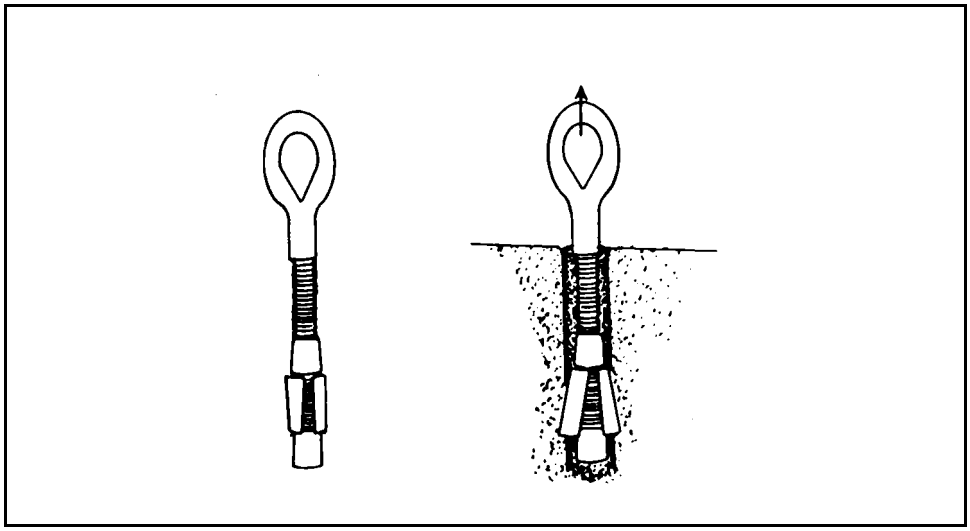

Figure 8-13. Rock Anchor

8-42. Since the wedging action is strongest under a direct pull, always set rock anchors so that the pull is in direct line with the shaft of the anchor. Drill holes for rock anchors 5 inches deep. In hard rock, use a 1-inch-diameter drill. In soft rock, use a 3/4-inch-diameter drill. Drill the hole as neatly as possible so that the rock anchor will develop maximum strength. In extremely soft

rock, use a different type of anchor as the wedging action may not give sufficient holding power.

DEADMAN

8-43. A deadman consists of a log buried in the ground with the guy line or anchor sling connected to it at its center *(Figure 8-14)*. A deadman provides greater strength than a holdfast under most conditions. It is more suitable for permanent installation, and it is the best form of anchor for heavy loads because of the large surface area presented against the undisturbed soil. In some installations, it may be necessary to slacken or tighten the guy lines by putting in a turnbuckle near the ground or installing a take-up tackle.

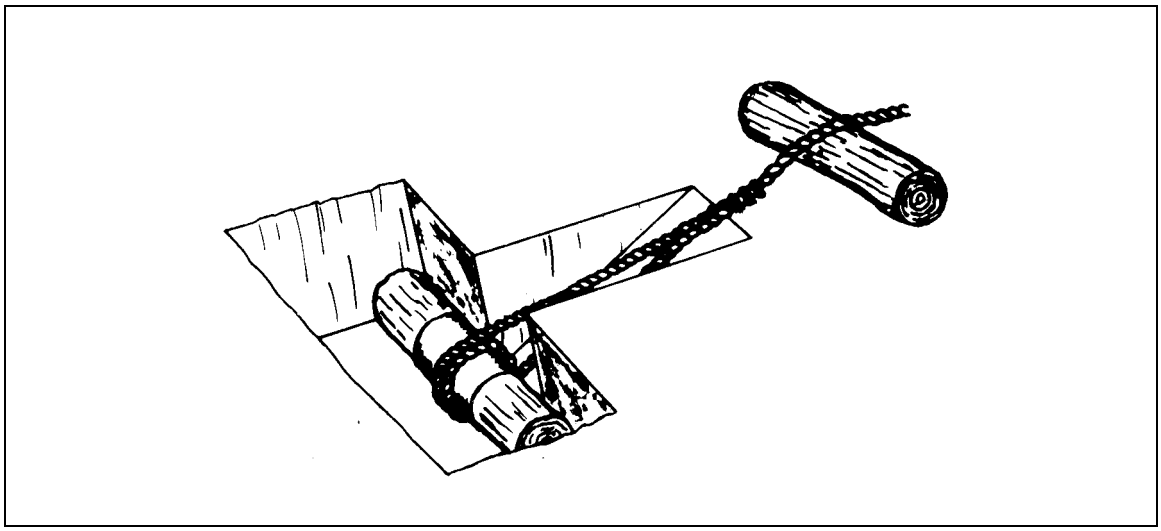

Figure 8-14. Log Deadman

8-44. Bury the deadman as deep as necessary for good bearing on solid ground. Follow these steps:

Step 1. Undercut the bank in the direction toward the guy line at an angle of about 15 degrees from the vertical. This will use as much of the surface of the undisturbed earth as possible.

Step 2. Drive stakes into the bank at several points over the deadman to increase the bearing surface.

Step 3. Cut a narrow, inclined trench for the guy line or anchor sling through the bank, leading to the center of the deadman. Place a short beam or log on the surface of the ground under the guy line or anchor sling at the outlet of the inclined trench, if possible.

Step 4. Fasten the guy line or anchor sling securely to the center of the deadman so that the standing part of the line (on which the pull occurs) will lead from the bottom of the deadman. This reduces the tendency of the deadman to rotate upward out of the hole.

Step 5. Clip the running end of the guy line securely to the standing part. The strength of the deadman depends partly on the strength of the buried log, but

the main strength is the holding power of the earth. *Table 8-7* lists the deadman holding power in ordinary earth.

Table 8-7. Deadman Holding Power in Ordinary Earth

Mean Anchor Depth (ft)	Safe Resistance (lb/sq ft) of Deadman Area by Inclination of Pull (Vertical to Horizontal)				
	Vertical	1:1	1:2	1:3	1:4
3	600	950	1,300	1,450	1,500
4	1,050	1,750	2,200	2,600	2,700
5	1,700	2,800	3,600	4,000	4,100
6	2,400	3,800	5,100	5,800	6,000
7	3,200	5,100	7,000	8,000	8,400

8-45. Design and place bearing plates where the cable is in contact with, or bears on, the log or squared timber deadman. The bearing plate prevents the cable from cutting through the timber. *Table 8-8, page 8-22,* shows the required size of the bearing plate based on cable and deadman sizes. See *TC 5-210, FM 5-125,* or *FM 5-34* for more information about a deadman.

Table 8-8. Bearing-Plate Dimensions

Deadman Face (in)	Dimension	Cable Size (in)							
		3/8	1/2	5/8	3/4	7/8	1	1 1/8	1 1/4
8	x	7/16	7/8	1 1/4	—	—	—	—	—
	y	4	8	11	—	—	—	—	—
	z	6	6	6	—	—	—	—	——
10	x	7/16	11/16	1	1 3/8	—	—	—	—
	y	4	6	9	12	—	—	—	—
	z	8	8	8	8	—	—	—	—
12	x	7/16	9/16	13/16	1 1/8	1 7/16	—	—	—
	y	4	5	7	10	13	—	—	—
	z	10	10	10	10	10	—	—	—
14	x	7/16	7/16	11/16	7/8	1 1/4	1 9/16	2	—
	y	4	4	6	8	11	14	18	—
	z	12	12	12	12	12	12	12	—
16	x	7/16	7/16	9/16	13/16	1 1/8	1 3/8	1 11/16	2 1/8
	y	4	4	5	7	10	12	15	19
	z	14	14	14	14	14	14	14	14
18	x	7/16	7/16	7/16	11/16	7/8	1 1/4	1 9/16	1 13/16
	y	4	4	4	6	8	11	14	16
	z	16	16	16	16	16	16	16	16
20	x	7/16	7/16	7/16	11/16	7/8	1 1/8	1 3/8	1 11/16
	y	4	4	4	6	8	11	14	16
	z	18	18	18	18	18	18	18	18
24	x	7/16	7/16	7/16	9/16	11/16	7/8	1 1/8	1 3/8
	y	4	4	4	5	6	8	10	12
	z	22	22	22	22	22	22	22	22

NOTE: The values in this table are based on the use of IPS cable.

Chapter 9

Connections

Connections are one of the most critical sections of any bridge (existing or under construction). All the detailed planning, layout, and construction of a new bridge can go to waste if connections of key joints are made with inadequate materials that fail under the varying stresses in the bridge. The analytical classification and design procedures assume good connections of appropriate connectors. This chapter focuses on the most common types and selection criteria of connections.

TIMBER CONNECTIONS

9-1. Many timbers are connected by nails or spikes. Nails or spikes are normally used in handrails and knee braces to fasten timber decking to the bridge stringers. For critical connections where a high-strength fastener is required, substitute bolts for nails. Connections that require bolts also include stringer splicing and connection of the substructure members.

NAILS OR SPIKES

9-2. To create an adequate connection using nails or spikes, drive the nail or spike into the timber member to a depth no less than one-half (preferably two-thirds) the length of the fastener *(Figure 9-1)*. The engineer in charge of the project must use judgment and experience to determine the quantity of the fasteners required to make the connection. Drive enough nails or spikes (in suitable patterns) to provide a rigid and durable connection. *Table 9-1, page 9-2*, gives data for the various sizes of standard nails and spikes used in bridge construction.

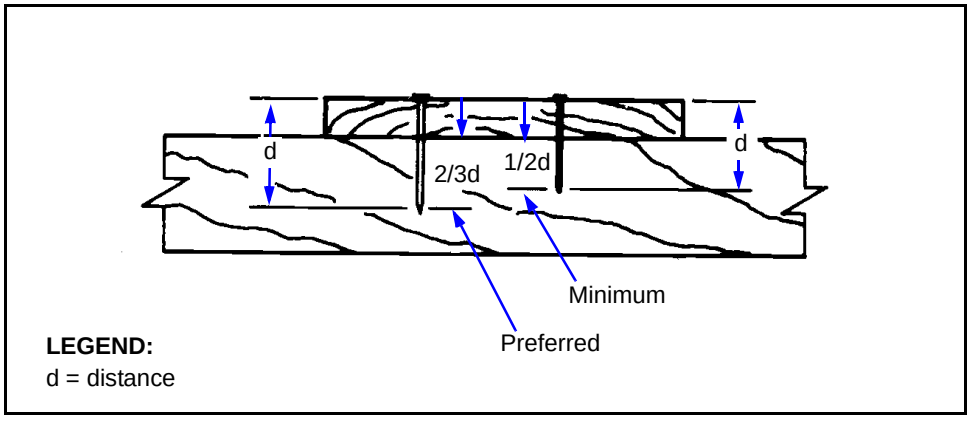

Figure 9-1. Fastener Penetration in Timber Connections

Table 9-1. Data for Nails and Spikes

Type	Size	Length (in)	Gauge	Diameter (in)
Nails	10d	3	9	0.1483
	12d	3 1/4	9	0.1483
	16d	3 1/2	8	0.1620
	20d	4	6	0.1920
	30d	4 1/2	5	0.2070
	40d	5	4	0.2253
	50d	5 1/2	3	0.2440
	60d	6	2	0.2625
Spikes	—	7	5/16	5/16
	—	8	3/8	3/8
	—	9	3/8	3/8
	—	10	3/8	3/8
	—	12	3/8	3/8

LAG SCREWS

9-3. Use lag screws instead of nails when the possibility of tension failure exists in timber members. Compute the allowable load on a lag screw by using the *Hankinson* formula as follows:

$$P_a = \frac{(P)PY}{P \sin^2\theta + PY \cos^2\theta} \quad (9\text{-}1)$$

where—

P_a = *allowable load at an angle to the grain*
P = *allowable load parallel to the grain (Table C-1, pages C-3 through C-6)*
PY = *allowable load perpendicular to the grain (Table C-1)*
θ = *angle between the load and the grain*

9-4. Allowable loads can vary greatly because of the variance in timber grade and type. For this reason, do not consider the strength of lag screws when designing connections. Consider only the spacing and edge distance. Always use washers under the lag-screw head.

9-5. Space lag screws apart at a minimum of four times the diameter of the screw, measured in the direction of the tensile or compressive load. For compression members, the end distance should be at least four diameters. For tension members, spacing should be at least seven diameters. For loading perpendicular to the grain, the loaded edge distance should be at least four times the diameter of the screw. When the load is parallel to the grain, one

and one-half diameters is a sufficient edge distance. Measure all distances from the center of the lag screws *(Figure 9-2).*

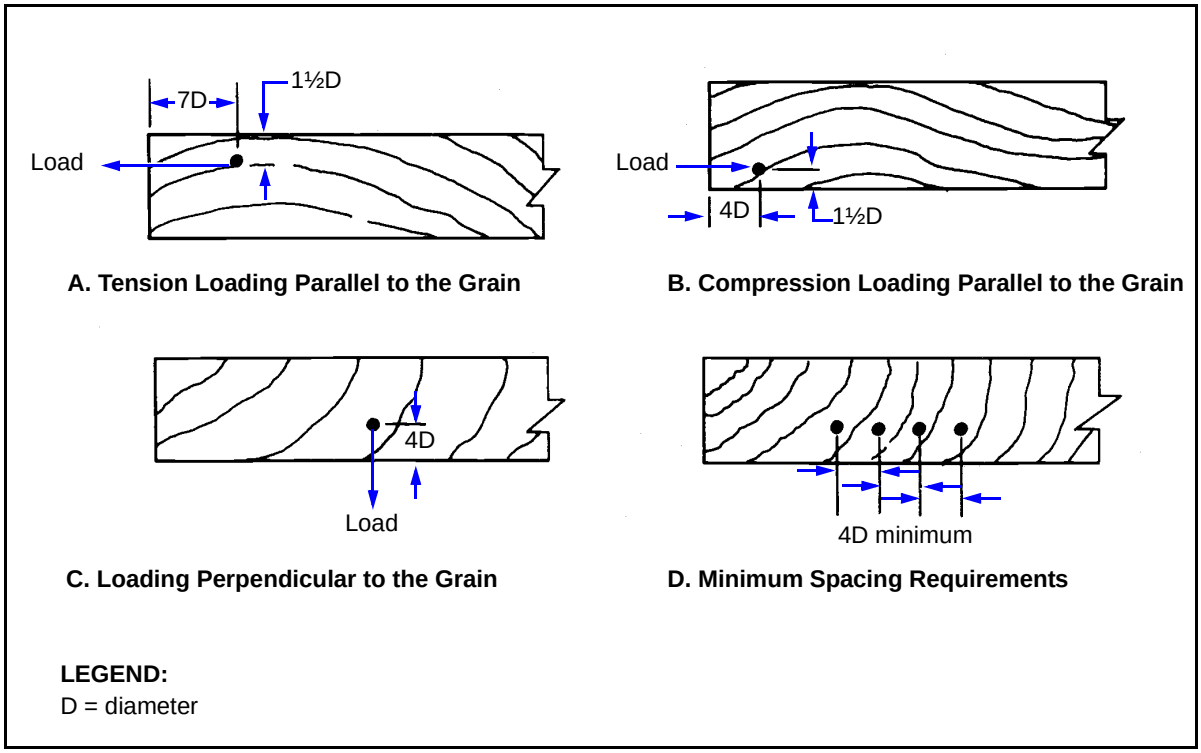

Figure 9-2. Edge Distance and Spacing Requirements

BOLTS

9-6. Critical timber connections require bolts. Bolts provide a strong, efficient, and economical method of fastening wood members together. Bolts are available in a variety of sizes and can be used with all sizes of timber. Use bolted timber connections to splice stringers, connect substructure members, and attach deck and curb material. Also use them for fastening wood to wood and for fastening steel plates to wood members. Always use washers under the bolt head and bolt nut.

Maximum Allowable Loads

9-7. *Table 9-2, page 9-4,* shows the maximum allowable loads (normal loads) for commonly used bolts. These tabulated loads are for bolted joints in lumber which is seasoned to a moisture content nearly equal to that it will attain in service. The loads are for bolted joints used under continuously dry conditions, as in most covered structures. For joints that will be exposed to weather or will always be wet, reduce the tabulated loads to 75 and 67 percent, respectively. Place a washer or metal plate between the wood and the bolt head and between the wood and the nut. Use the loads given in *Table 9-2* when each of the side members of wood is half the thickness of the main (enclosed) member *(Figure 9-3A, page 9-5).*

Table 9-2. Allowable Bolt Loads (kips per bolt)

Bolt Diameter (in)	Portion (Length) of Bolt in Member (in)						
	1 5/8	2	4	6	8	10	12
1/2	1.01 0.48	1.18 0.59	1.29 1.04	—	—	—	—
5/8	1.29 0.54	1.56 0.67	2.01 1.33	2.01 1.42	2.01 1.26	—	—
3/4	1.55 0.60	1.91 0.74	2.89 1.49	2.89 1.97	2.89 1.84	—	—
7/8	1.81 0.67	2.23 0.82	3.83 1.64	3.94 2.41	3.94 2.47	3.94 2.29	—
1	2.07 0.73	2.55 0.89	4.72 1.79	5.14 2.68	5.14 3.15	5.14 3.00	5.14 2.79
1 1/4	2.59 0.84	3.18 1.03	6.22 2.06	7.85 3.10	8.04 4.17	8.04 4.61	8.04 4.45
1 1/2	3.10 0.99	3.82 1.21	7.56 2.42	10.60 3.63	11.60 4.78	11.60 5.44	11.60 5.44
1 3/4	3.62 1.10	4.45 1.36	8.91 2.72	12.87 4.09	15.28 5.44	15.90 6.63	15.90 7.21
2	4.14 1.23	5.10 1.51	10.20 3.03	15.12 4.54	18.80 6.05	20.40 7.56	20.50 8.77

NOTE: The top number is the load parallel to the grain. The bottom number is the load perpendicular to the grain.

9-8. If the side members are more than half the thickness of the main member, do not increase the tabulated load *(Figure 9-3B)*. When the side members are less than half the thickness of the main member, the tabulated load for a main member is twice the thickness of the thinnest side member. For example, with 3-inch side members and an 8-inch main (center) member, the tabulated loads for an 8-inch main member apply *(Figure 9-3C)*.

9-9. When the joint consists of two members of equal thickness (the bolt is in single shear), use one-half the tabulated load for a piece twice the thickness of one of the members *(Figure 9-4A)*. When members of a two-member joint are of unequal thickness, use one-half the tabulated load for a piece twice the thickness of the thinner member *(Figure 9-4B)*. When using steel plates for side members, increase the tabulated loads for a parallel-to-grain loading by 25 percent. Do not increase the tabulated loads for perpendicular-to-grain loads *(Figure 9-5, page 9-6)*.

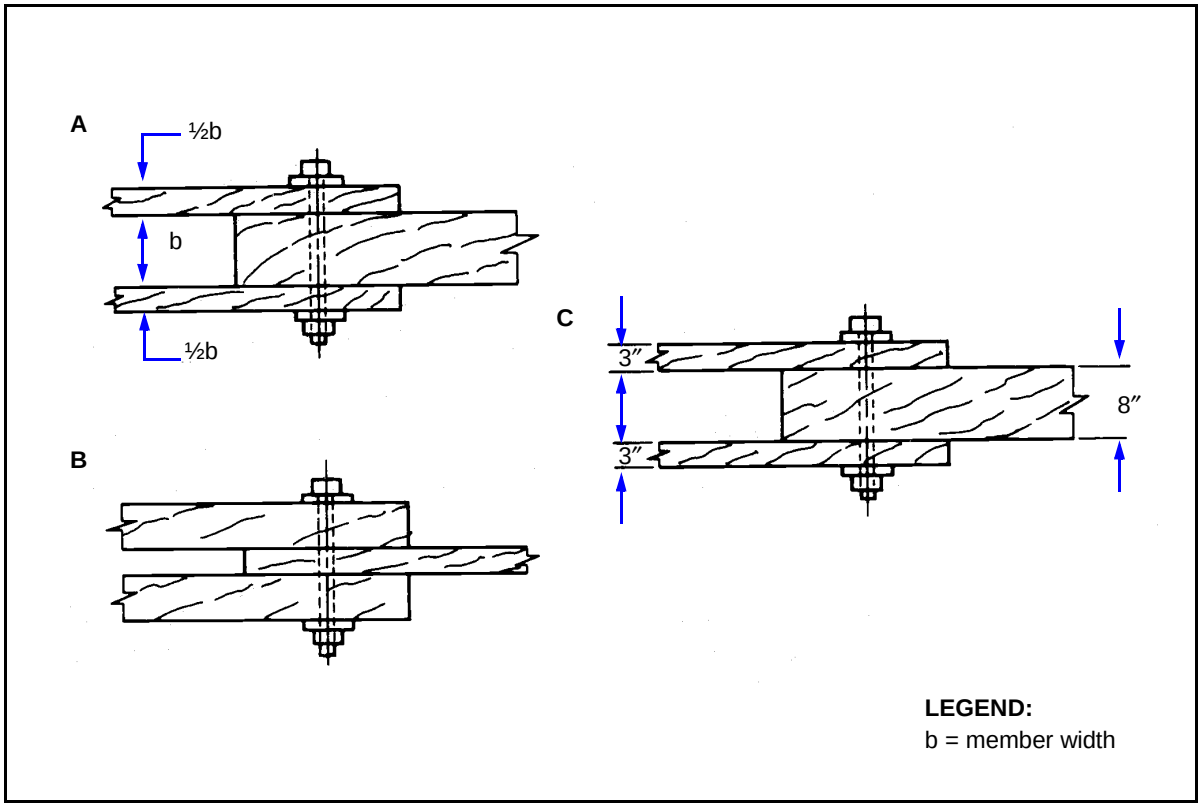

Figure 9-3. Bolted Double-Shear Connections

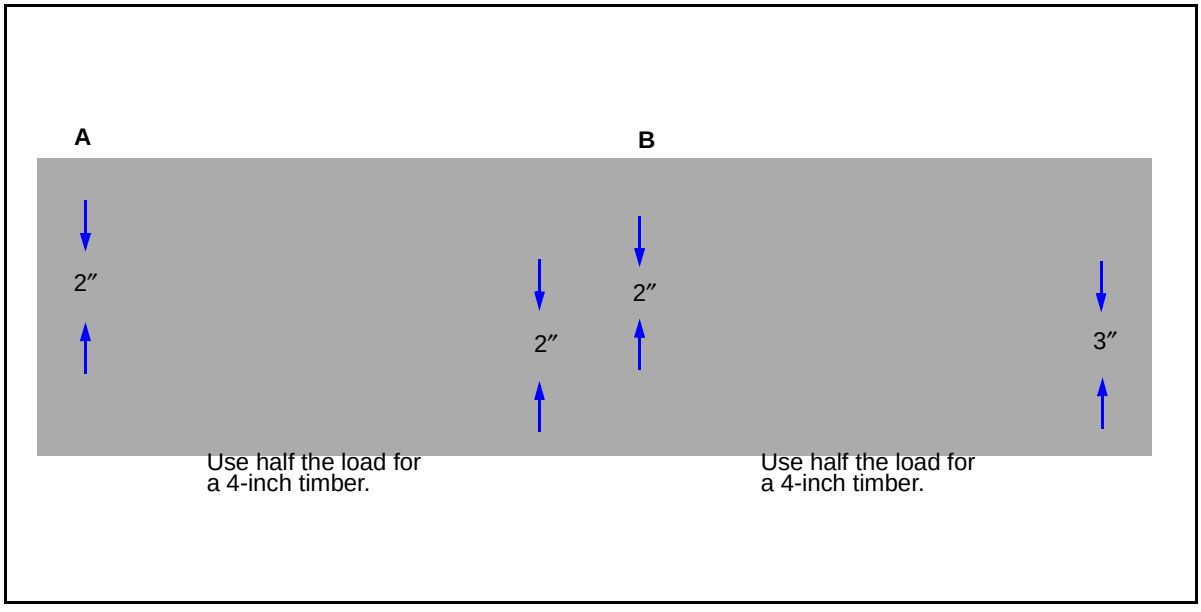

Figure 9-4. Bolted Single-Shear Connections

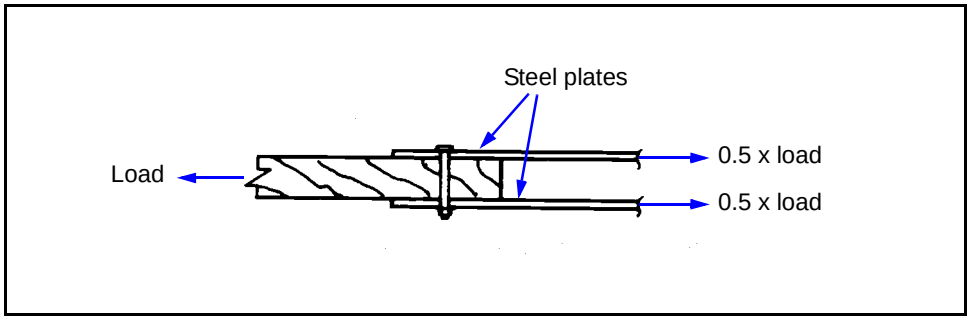

Figure 9-5. Steel-to-Timber Bolted Connections

Allowable Pressure

9-10. The direction of bolt pressure on the grain of the wood must be considered when determining the allowable pressure. *Table 9-2, page 9-4,* gives the allowable pressure for bolts placed parallel and perpendicular to the grain. *Figure 9-6* shows that the bolt pressure is parallel to the grain of the inclined member. In the horizontal member, however, the load is neither parallel nor perpendicular to the grain. Use *equation 9-1* to find the allowable bolt load on the horizontal member.

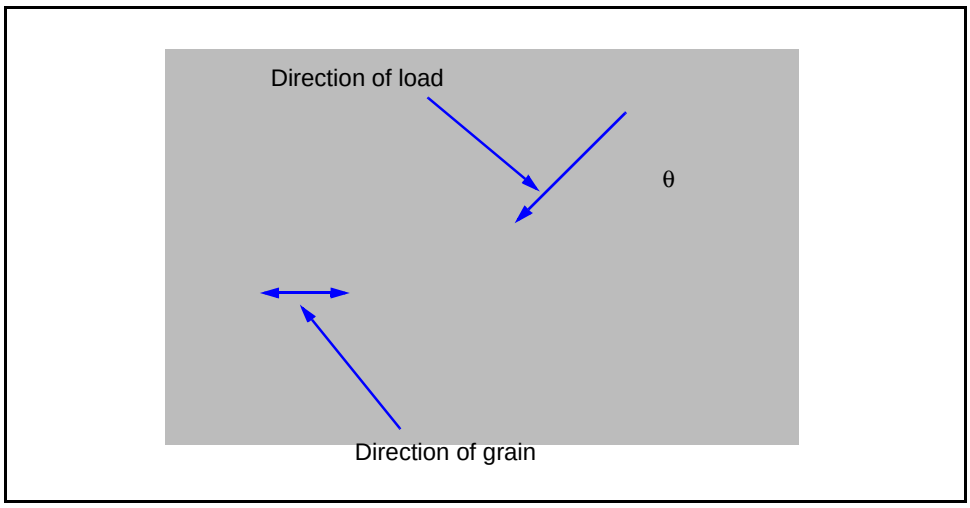

Figure 9-6. Timber Connections with the Load Applied at an Angle to the Grain

Design Criteria

9-11. In bolted connections, the allowable load that the joint supports must not exceed the allowable bolt load of one bolt multiplied by the number of bolts used. Criteria include the following:

- The net cross-sectional area of the member (measured at a right angle to the direction of the load) is the gross cross-sectional area of the member minus the area of the bolt holes in the section.

- The allowable tensile joint load for any bolted joint load must not exceed the net cross-sectional area multiplied by the allowable tensile unit stress of the lumber.
- The net area for softwoods at the critical section for parallel-to-grain loading must be at least 80 percent of the total area in bearing under all bolts in the member. For hardwoods, the net area must be at least 100 percent of the total area.

9-12. Data on the species and sizes of the members to be joined is required for designing a bolted joint. Assume a bolt size and then find the allowable load for one bolt. To compute the required number of bolts, divide the total load by the allowable load per bolt. The values given in *Table 9-2, page 9-4*, are based on the maximum allowable stresses for average structural timbers and are 1,800 psi parallel to the grain and 500 psi perpendicular to the grain. If the timber to be used has different allowable stresses, increase or decrease the tabulated value of the load, as needed. Do this by multiplying the tabular stress by the ratio of allowable stress for the chosen timber to 1.8 ksi (parallel to the grain) or 0.5 ksi (perpendicular to the grain).

Spacing

9-13. Bolt spacing is critical. Base the bolt spacing and the minimum required edge distance on the criteria described in *Figures 9-2, page 9-3*, and *Figure 9-3, page 9-5*.

Washers

9-14. Add washers to both sides of the bolted timber connections to prevent bearing failure in the timber. Use wrought-iron or steel-plate round washers. *Table 9-3* shows the washer requirements for bolted connections.

Table 9-3. Washer Requirements for Bolted Connections

Bolt Diameter (in)	Hole Size (in)*	Washer Diameter (in)	Washers per Pound (approx)
1/2	9/16	1 3/8	27.0
5/8	11/16	1 3/4	13.0
3/4	13/16	2	10.0
7/8	15/16	2 1/4	8.6
1	1 1/16	2 1/2	6.2
1 1/4	1 3/8	3	4.0
1 1/2	1 5/8	3 1/2	2.5
1 3/4	1 7/8	4	2.2
2	2 1/8	4 1/2	1.7

***The washer-hole size is 1/16 inch larger than the diameter of the bolt for all bolts up to and including 1 inch. For larger bolts, use a washer-hole size that is 1/8 inch larger than the diameter of the bolt.**

FLOOR CLIPS

9-15. Use floor clips to connect a laminated wooden deck to steel stringers. Position the floor clips with the anchor end under the flange and then nail them to the lamination at 16- to 18-inch intervals. Install floor clips in pairs, one on each side of the stringer *(Figure 9-7)*. If floor clips are not available or a laminated deck is not used, use one of the expedient methods shown in *Figure 9-8*. Fasten the deck to the stringers before placing the stringers. The objective is to prevent lateral movement of the decking.

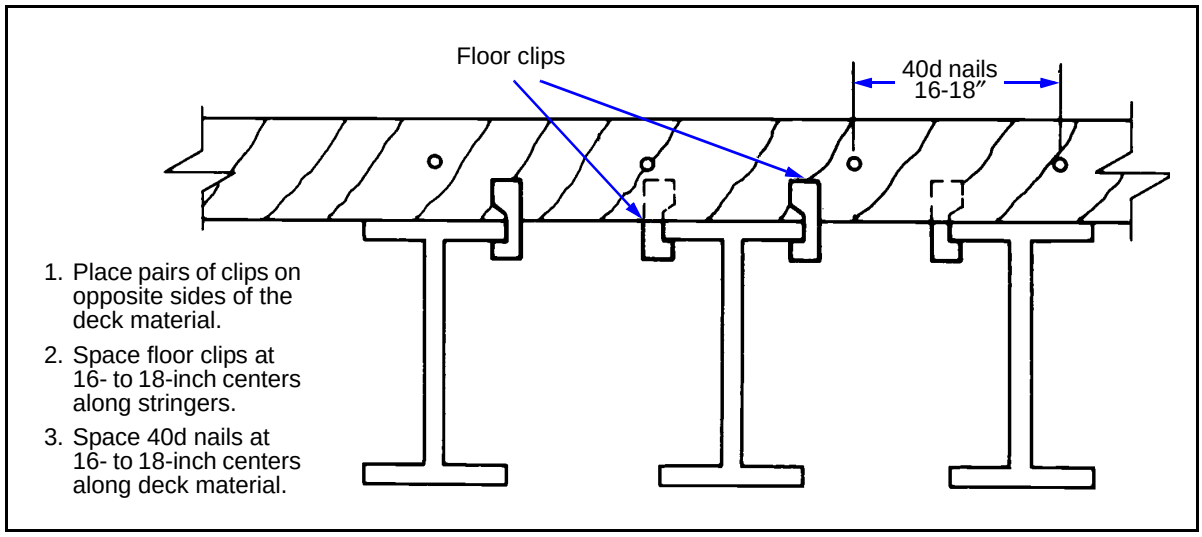

Figure 9-7. Deck Connections for Laminated Decking

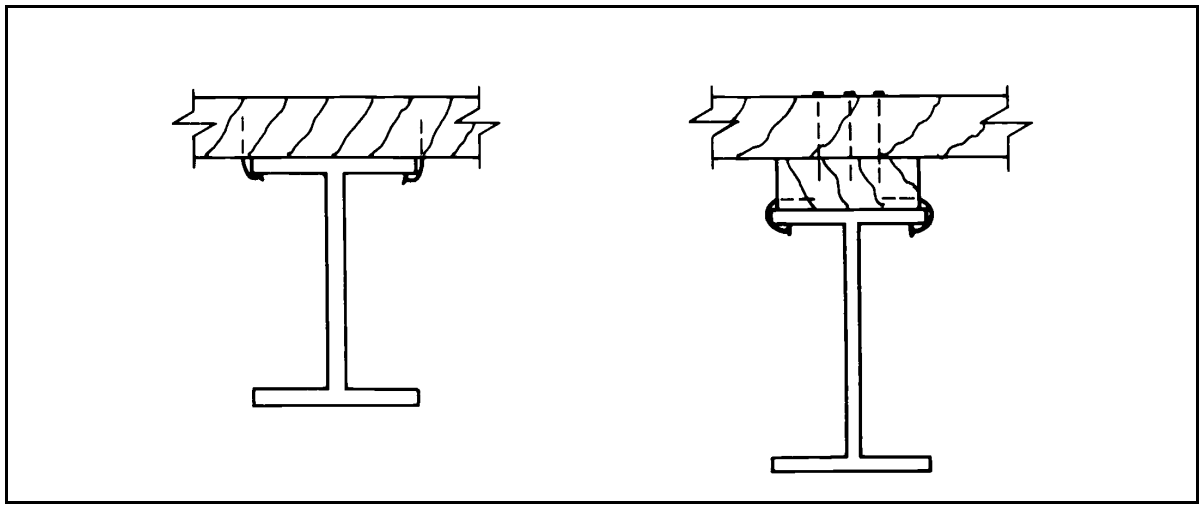

Figure 9-8. Expedient Deck Connections

OTHER CONNECTORS

9-16. Shear plates, spike grids, clamping plates, and split and toothed-ring connectors are specially designed devices for making timber-to-timber

connections. However, these connectors are intended for light-frame construction, which limits the application of these connectors in military-bridge construction.

STEEL CONNECTIONS

9-17. In the AFCS, preengineered structures come complete with bolts and prepunched, matched holes. Such structures make construction easier and quicker.

BOLTS

9-18. Conditions may arise that call for the design and fabrication of bolted steel connections (including high-strength bolts). The design process for bolted steel connections involves determining spacing and evaluating connection strengths and possible failures.

Bolt Spacing

9-19. The minimum center-to-center bolt spacing is three times the diameter of the bolt. *Figure 9-9* shows the typical bolt spacing for steel angles. The minimum distance from the edge of a member to the center of the nearest bolt is the edge distance. *Table 9-4, page 9-10*, lists edge distances for some of the more common bolt sizes.

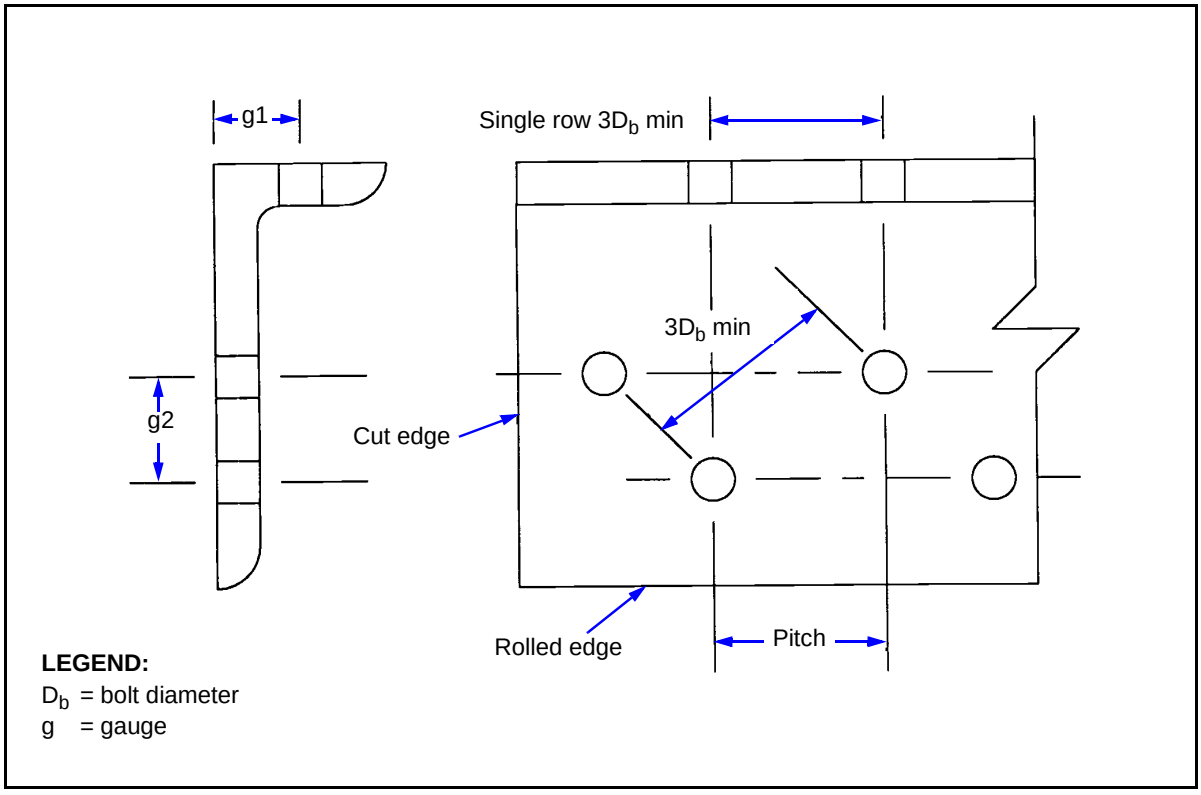

Figure 9-9. Bolt Spacing

Table 9-4. Edge Distances

Gauge	Leg Length (in)												
	8	7	6	5	4	3 1/2	3	2 1/2	2	1 3/4	1 1/2	1 1/4	1
g	4 1/2	4	3 1/2	3	2 1/2	2	1 3/4	1 3/8	1 1/8	1	7/8	3/4	5/8
g1	3	2 1/2	2 1/4	2	*	*	*	*	*	*	*	*	*
g2	3	3	2 1/2	1 3/4	*	*	*	*	*	*	*	*	*
*Single row only.													

Failure Modes

9-20. The strength of a bolted connection is governed by the smallest of the following:

- Shear strength of the bolts.
- Bearing strength of the bolted members.
- Tensile strength of the bolted members at the weakest section.

To determine the strength of a connection, first evaluate the failure modes (shear, bearing, tension, or a combination of all three).

9-21. **Shear.** The most common type of bolt failure is shear. Shear occurs when the applied forces exceed the bolts' allowable shear capacity. In dealing with shear, first determine whether the connection is a single- or double-shear connection. The allowable shear capacity for a double-shear connection is twice that of a single-shear connection. *Figure 9-10* illustrates the typical shear failure for both connections. Double shear is preferred where the eccentricity of the applied loads might induce serious damage. Determine the shear capacity of a bolt by using *Table 9-5* or the following equation:

$$v = AF_v \quad (9\text{-}2)$$

where—

v = *shear capacity of one bolt, in kips*
A = *area of one bolt (single shear), in square inches (double the area for double shear)*
F_v = *allowable shear stress of the steel, in ksi (0.49Fy)*

9-22. **Bearing.** Bearing failure is the tendency of a bolt to enlarge its hole. Determine the bearing capacity of a bolt by using *Table 9-5* or the following equation:

$$P_B = DF_Bt \quad (9\text{-}3)$$

where—

P_B = *bearing capacity per bolt, in kips*
D = *bolt diameter, in inches*
F_B = *allowable bearing stress of the steel, in ksi (Table 3-6)*
t = *thickness of the thinner piece of steel, in inches*

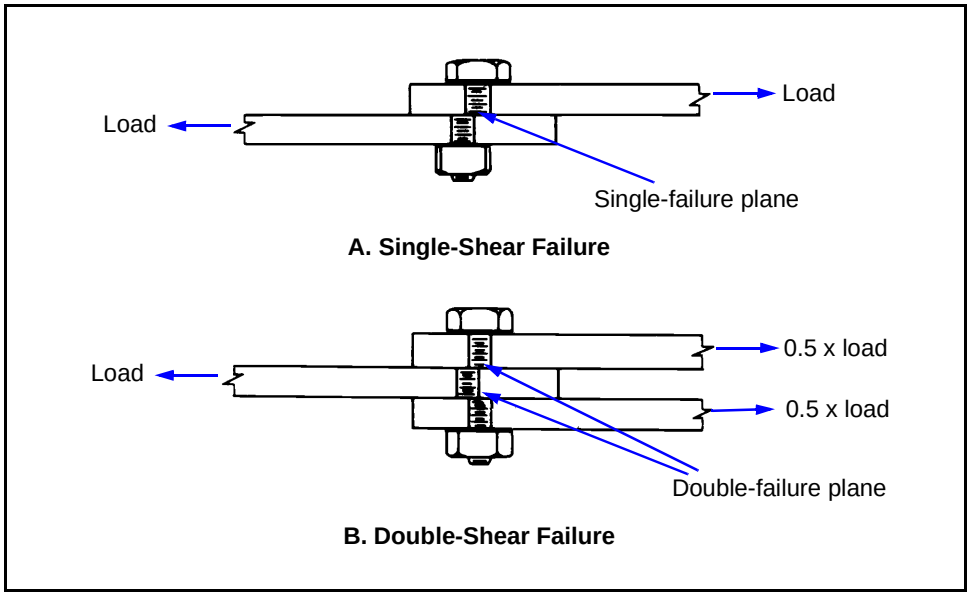

Figure 9-10. Shear Failure in Bolted Connections

Table 9-5. Bolt Shear and Bearing Capacities

Bearing Capacity per Bolt (kips)						
Material Thickness (in)	**Bolt Diameter (in)**					
	5/8	**3/4**	**7/8**	**1**	**1 1/8**	**1 1/4**
1/8	3.52	4.22	4.92	5.63	6.33	7.03
3/16	5.27	6.33	7.38	8.44	9.49	10.55
1/4	7.03	8.44	9.84	11.25	12.66	14.06
5/16	8.79	10.55	12.30	14.06	15.82	17.58
3/8	10.59	12.66	14.77	16.88	18.98	21.09
7/16	12.30	14.77	17.23	19.69	22.15	24.61
1/2	14.06	16.88	19.69	22.50	25.31	28.13
9/16	15.82	18.98	22.15	25.31	28.48	31.64
5/8	17.58	21.09	24.61	28.13	31.64	35.16
11/16	19.34	23.20	27.07	30.94	34.80	38.67
3/4	21.09	25.31	29.53	33.75	37.97	42.19
13/16	22.85	27.42	31.99	36.56	41.13	45.70
7/8	24.61	29.53	34.45	39.38	44.30	49.22
15/16	26.37	31.64	36.91	42.19	47.46	52.73
1	28.13	33.75	39.38	45.00	50.63	56.25
Shear per Bolt (kips)						
Type	**Bolt Diameter (in)**					
	5/8	**3/4**	**7/8**	**1**	**1 1/8**	**1 1/4**
Single	3.68	5.30	7.22	9.42	11.93	14.73
Double	7.36	10.60	14.44	18.84	23.86	29.46

9-23. **Tensile.** Compute the tensile strength as follows:

$$T = AF_t \quad (9\text{-}4)$$

where—

T = *tensile strength of the member, in kips*

A = *net area of the member, in square inches. (The net area of the member is its gross cross-sectional area minus the total of the area removed for bolt holes at a given section. When determining the net area, use a diameter for the bolt hole equal to 1/8 inch greater than the bolt diameter. If the computed net area is greater than or equal to 85 percent of the gross area [Ag], use 0.85Ag instead of the computed net area.)*

F_t = *allowable tension of the member, in ksi (29 ksi for steel)*

9-24. **Combination.** After determining the shear and bearing capacities for a single bolt, determine the strength of the connection by examining the various modes of failure. A connection may fail by simultaneous shear, bearing, or tensile failures in any combination among the various rows of bolts.

WELDS

9-25. When equipment and trained personnel are available, use welded instead of bolted connections. Minor connections for which stress is not computed (such as nailing clips) may be welded without a formal design. However, weld major load-carrying connections only after careful design. These connections require trained and supervised welders. If in doubt about the quality of welding equipment or the welders' level of training, use bolted connections.

9-26. Fabricating welded connections is critical. A weld design is wasted if not followed correctly. Welded connections require designs suited to bridge construction. Do not weld connections that are specifically designed to be bolted. Work is easier if the component parts are clamped together or secured by several fitting-up bolts before welding. Experienced, well-trained welders are essential, since satisfactory welded connections depend entirely on the skills of the welders. Special training and skill are also required to inspect welded connections properly, since welds may look sound but be inferior. Welds are economical and, when properly placed, are as dependable as bolted connections.

Welding Process

9-27. The two principal welding processes for structural work are electric-arc and oxyacetylene welding. In electric-arc welding, the electrical arc formed between a suitable electrode and the base metal develops the welding heat. The electrode is generally steel (use only shielded-arc electrodes). The electric-arc process is commonly used for structural welding. In oxyacetylene welding, welding heat is obtained by burning an oxygen-acetylene gas mixture discharged under pressure from a torch designed specifically for the purpose. Oxyacetylene welding is preferred for butt welds when joining two heavy pieces of metal. *Figure 9-11* shows some basic welding terminology.

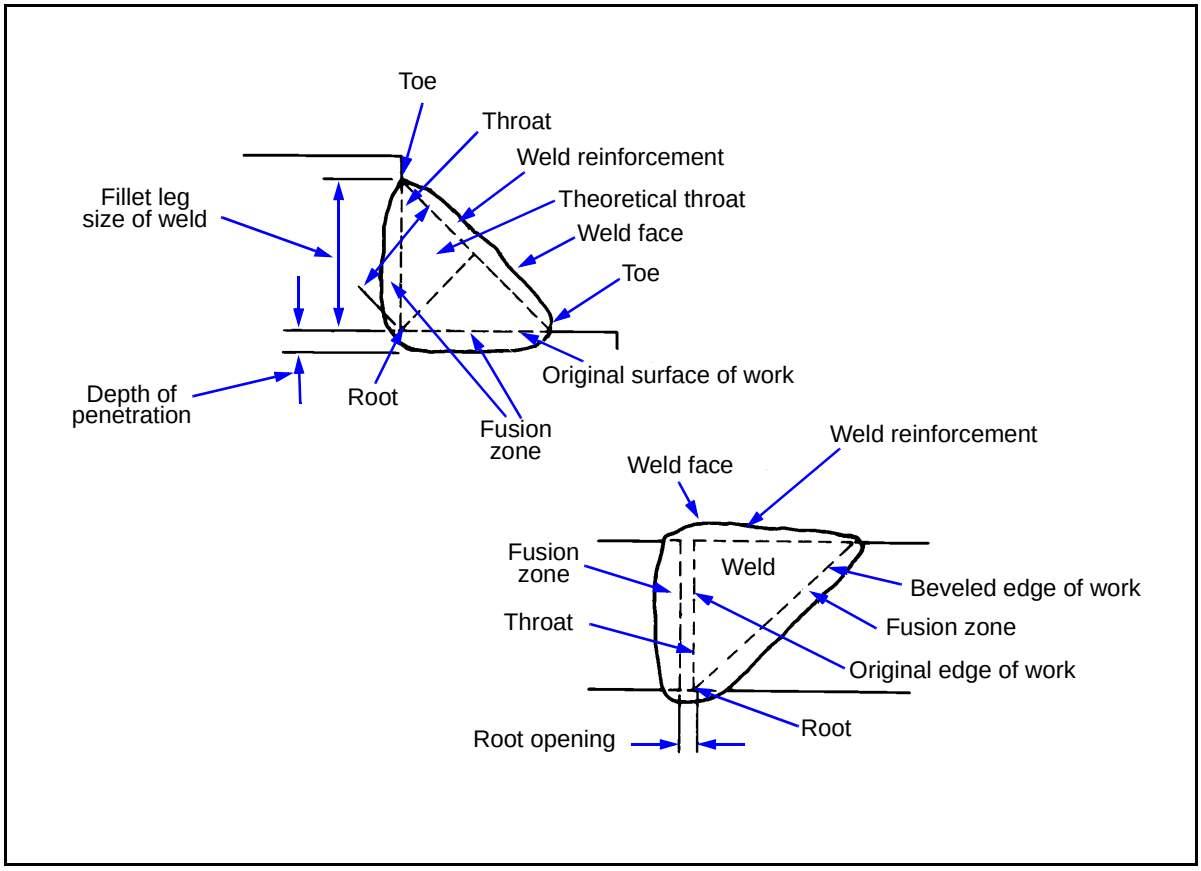

Figure 9-11. Basic Welding Terminology

9-28. When choosing a welding design, consider such factors as metal type, expansion and contraction, and post-weld inspection. Welding creates considerable heat. As a result, dangerous contractions occur during cooling that create internal residual stresses, possible deformities, and loss of strength. Design symmetrical welds to counter some of these stresses but do not overdesign. Peening and annealing remove much of the residual stress. Annealing in the field is impractical. Therefore, always peen field welds to remove residual stresses, regardless of their sizes. After welding, the base metal is more brittle than before, depending on the rate of cooling. The more carbon a metal contains the more difficult it is to weld. Preheating members provides a satisfactory treatment. In small welds on thick members, unequal heating creates unequal contractions. Larger members heat up far less, preventing some contraction and producing residual stresses. *Figure 9-12, page 9-14*, shows examples of various faulty and acceptable weld profiles.

Weld Types

9-29. The two basic weld types are the butt and fillet. *Figure 9-13, page 9-14*, shows several variations of these weld types.

9-30. **Butt Weld.** A butt weld does not require additional splice material. The weld metal alone provides the connection strength. The maximum stress

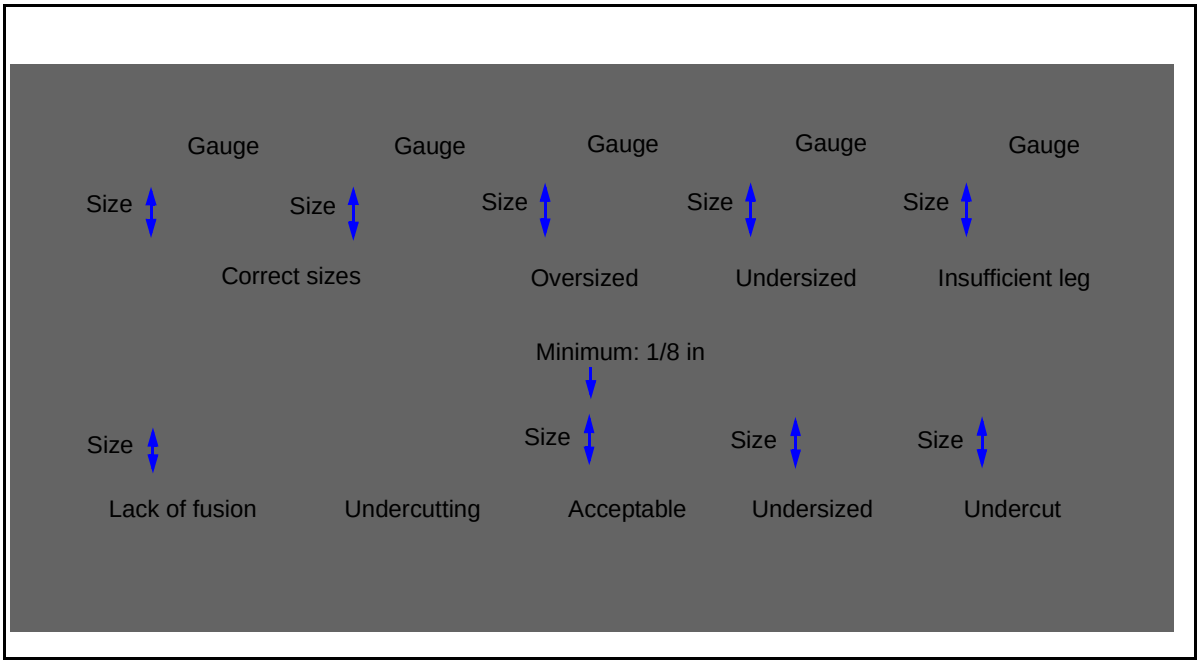

Figure 9-12. Faulty and Acceptable Weld Profiles

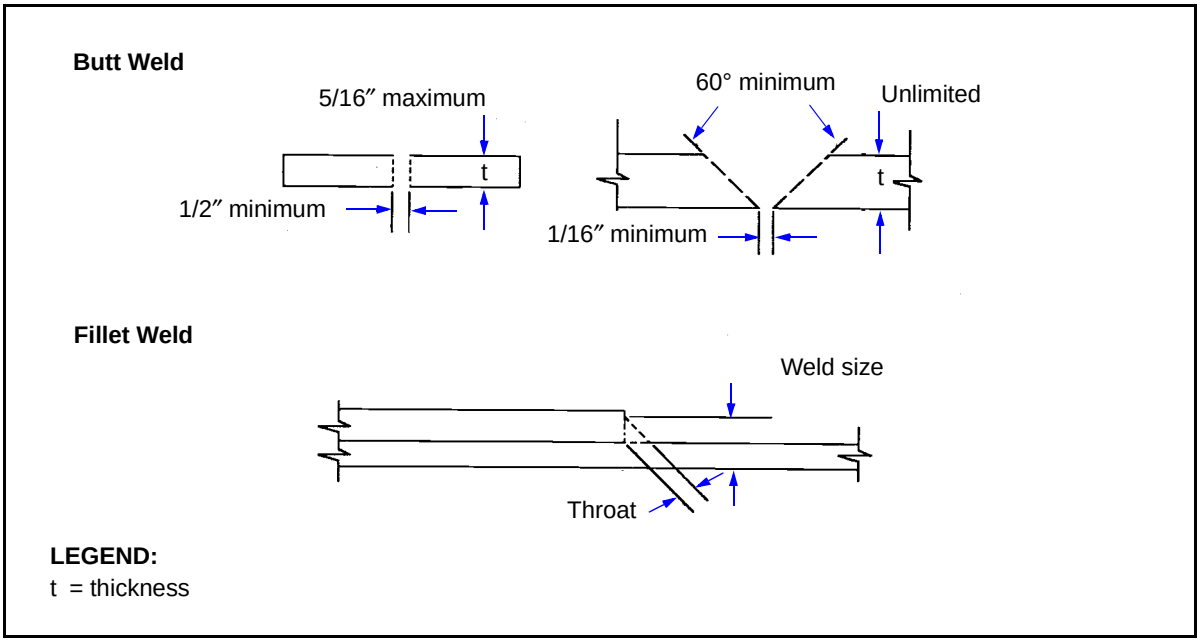

Figure 9-13. Typical Butt and Fillet Welds

permitted for butt welds is the same as that of the base metal of the parts joined. For square-ended parts where no special machining is required, the maximum thickness of the parts is 5/16 inch *(Figure 9-13)*. The throat of the butt weld is the thickness of the thinner section. When parts are specially machined, the thickness of the welded part is unlimited.

9-31. **Fillet Weld.** The fillet weld is the most commonly used weld because the base metal does not require special machining. The design is simple because the shear on the throat of the weld metal is the only weld stress considered. The faces of fillet welds are normally oriented 45 degrees to the plate surfaces. Where possible, avoid weld sizes larger than 5/16 inch. These sizes require more than one pass, with a subsequent increase in preparation, welding, and finishing time.

Weld Strength

9-32. **Butt Weld.** Determine the allowable butt-weld strength in the same manner as for the base metal of the parts joined.

9-33. **Fillet Weld.** Measure the fillet-weld strength by determining the shear value per linear inch of weld. The allowable shearing stress of field welds depends on the type of electrodes used. Some types of electrodes are as follows:

- E60 (produces 12.6 ksi).
- E70 (produces 13.6 ksi).
- E80 (produces 15.6 ksi).
- E90 (produces 16.2 ksi).

9-34. For a 5/16-inch fillet weld, the throat thickness is the minimum dimension of the weld *(0.707 x 5/16 = 0.221 inch).* An E60 electrode would develop 2.787 kips per linear inch *(0.221 x 12.6).* Compute the required weld length as follows:

$$L = \frac{P}{U_w} \qquad (9\text{-}5)$$

where—

L = *weld length, in inches*
P = *load the weld must transfer, in kips*
U_w = *weld strength, in kips per inch*

9-35. The following rules apply when considering the weld size:

- Make the weld size 1/16 inch less than the thickness of the plate if the edge of the plate is flame-cut or sheared.
- Use three-fourths of the nominal edge thickness as the weld size if the edge of the plate is rounded or rolled (such as the toes of the angles and the channel flanges).
- Make the weld size the same as the thickness of the metal to be joined. Since this is not possible in all cases, ensure that the size does not exceed one and one-half times the thickness of the metal.
- Do not allow individual weld sizes to exceed one-half the plate thickness, when welds are on both sides of a plate. Small welds are difficult to lay. Larger welds (more than one pass) require cooling delays to allow slag removal before the next pass.

- Avoid welds that are larger than 5/16 inch. *Table 9-6* lists the maximum thickness of material that may be connected by the various sizes of fillet weld.

Table 9-6. Maximum Thickness for Fillet Welds

Weld Size (in)	Minimum Plate Thickness (in)	Weld Strength (lb per in)
3/16	1/2	2,470
1/4	3/4	3,290
5/16*	1 1/4	4,110
3/8	2	4,930
1/2	6	6,580
5/8	>6	8,220
*Minimum size for a single pass.		

9-36. **Balanced Weld.** An important consideration in the design of fillet welds is the balanced-weld concept. Always use a balanced weld to reduce the effect of moment in an asymmetric section or in an eccentrically loaded section. For a simple case, consider an angle member (asymmetric section) that is to be loaded axially *(Figure 9-14A). Figure 9-14B* shows a balanced end weld.

9-37. Place more weld material at the top of the angle section than at the bottom of the section. In this way, no moment is introduced into the connection. This concept proportions the weld material in both locations, so that the moment effect is held to a minimum. Compute the total length of the required weld by using *equation 9-5*. Then compute the proportionate weld lengths as follows:

$$L_b = \frac{Ld}{L_L} \qquad (9\text{-}6)$$

where—

L_b = *weld length at the bottom of the angle section, in inches*
L = *total weld length required, in inches (equation 9-5)*
d = *distance from the neutral axis of the angle section to the outer edge of the nonwelded leg, in inches (Figure 9-14A)*
L_L = *length of the loaded angle leg, in inches*

9-38. The weld length required on the opposite leg becomes the total weld length required minus the weld length at the bottom of the angle section. When welding the end of the leg of the angle section to the connecting member, the corresponding weld lengths are computed as follows:

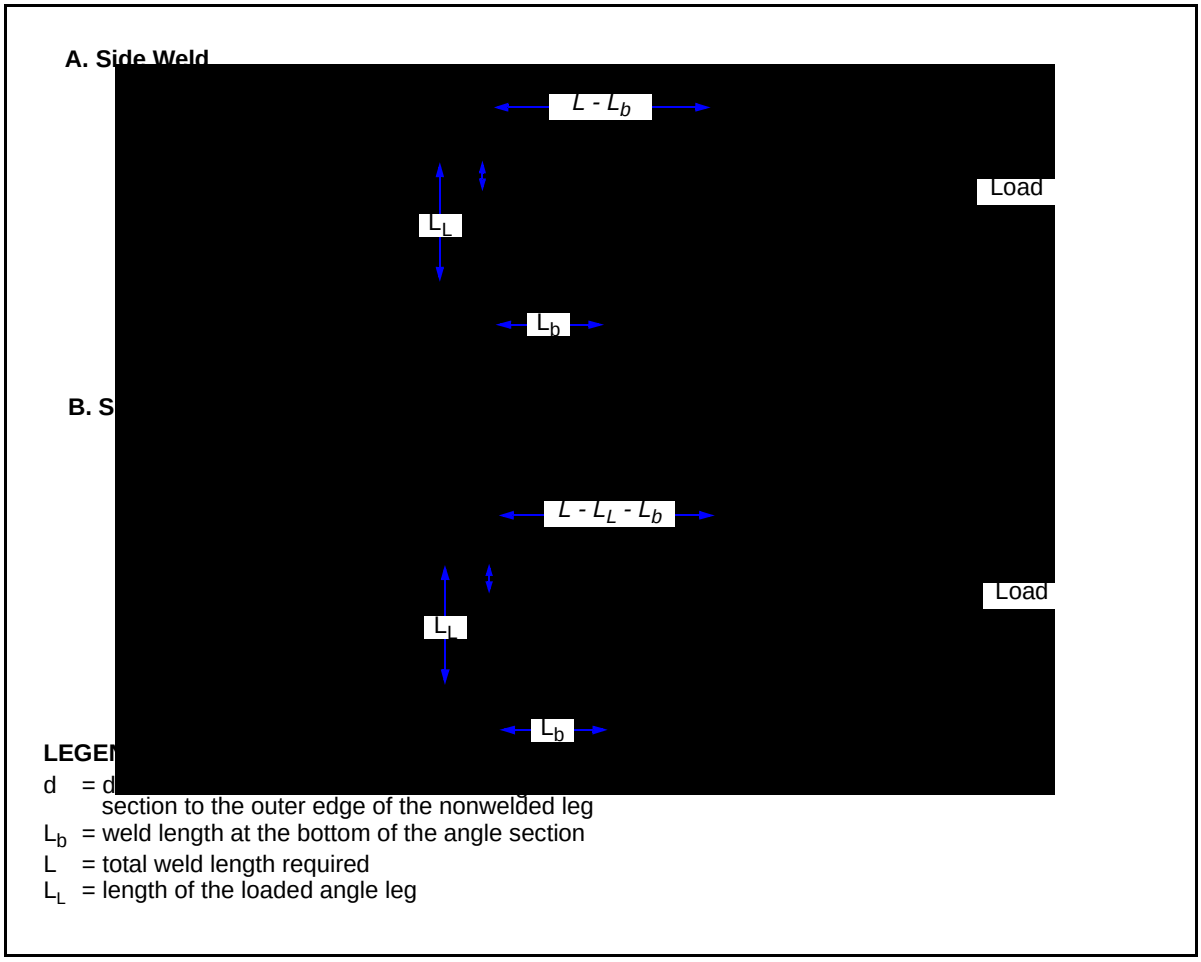

Figure 9-14. Balanced Weld Concept

$$L_b = \frac{d}{L_L} - \frac{L_L}{2} \qquad (9\text{-}7)$$

where—

L_b = *weld length at the bottom of the angle section, in inches*
L = *total weld length required, in inches (equation 9-5)*
d = *distance from the neutral axis of the angle section to the outer edge of the nonwelded leg, in inches (Figure 9-14A)*
L_L = *length of the loaded angle leg, in inches*

Chapter 10

Construction

Tentative bridge sites are selected through reconnaissance, and the more promising sites are reconnoitered in detail. The selection of a bridge site is governed by both tactical and technical considerations. Tactical requirements govern the general area for the bridge site. Technical considerations govern the site for permanent construction. A preliminary reconnaissance is made at the best site to establish horizontal and vertical control and to obtain information for the bridge design and construction planning. For bridge construction to proceed, it is necessary to locate a site, obtain information for design, and determine lines and grades for construction. The accuracy of measurements and the number and type of survey markers will vary depending on the degree of precision demanded and the type of construction to be performed.

PLANNING PROCESS

10-1. A systematic approach is needed to construct a bridge efficiently. Use the process described below when planning bridge construction.

BRIDGE-SITE INVESTIGATION

10-2. The characteristics of the gap will determine many of a bridge's requirements (such as length, materials, and construction time and effort). Reconnaissance and preliminary investigation requirements are discussed in *Chapter 2*. Construction in extremely cold environments is discussed in *TM 5-852-1*.

BRIDGE CONFIGURATION

10-3. Steel construction is preferred but requires special equipment, which may not be available. Timber may be readily available but is not capable of supporting the long spans that steel can accommodate. *Chapters 6* and *7* discuss specific information for determining a bridge configuration. The two major elements to consider are the—

- **Superstructure.** Choose a superstructure that will minimize the construction effort and provide the needed capacity. Rely on simply supported stringer bridges as much as possible to take advantage of their design and construction ease. Keep economy in mind when designing the superstructure.
- **Substructure.** Choose a substructure that will also minimize the construction effort. To design the substructure properly, assume the loads on the substructure and then verify these loads before completing the final design. The characteristics of the gap (wet or dry) will affect the type of substructure necessary.

WORKING DRAWINGS

10-4. After determining the bridge's configuration, prepare the necessary drawings. Preparation of complete drawings is necessary when AFCS standard designs are not suited to the conditions at the construction site. Try to adapt standard designs to construction requirements. Do not initiate detailed drawings until the subsurface conditions have been thoroughly explored. Final design decisions are affected by the limitations of the site, the available materials, the equipment, the labor, and the available time. Ensure that all drawings are accurately scaled. Scale detailed and cross-sectional views to show the required information. See *FM 5-233* for more information about bridge drawings. The drawings discussed below are required.

Elevation

10-5. A complete profile of the bridge will be needed. This view shows the elevations of the entire structure and bridge site in skeleton form. The drawing also serves as a record of the substructure analysis *(Figure 10-1)*.

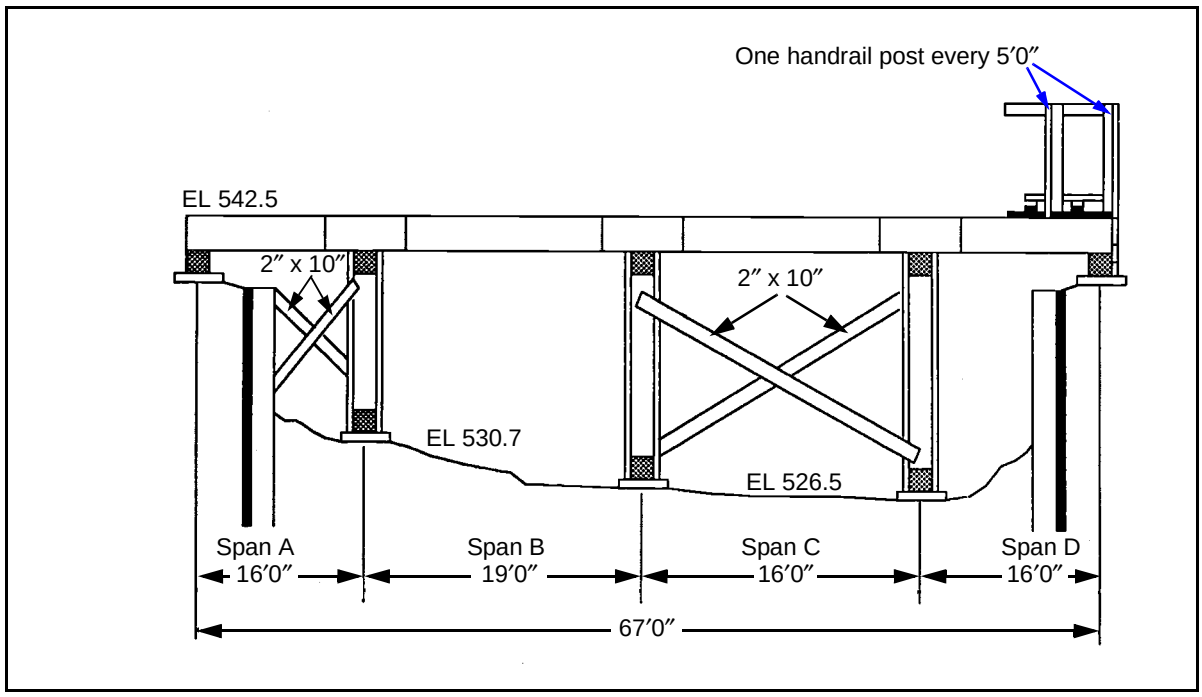

Figure 10-1. Elevation Drawing

Plan

10-6. A complete overhead view of the bridge will also be needed. This view shows the horizontal plan of the entire structure *(Figure 10-2)*. The plan includes all overhead view details (span lengths, pier and abutment locations, stringer placement, centerline, component identifications, and so forth). The plan also notes piece marks of all structural members that require a more detailed drawing and indicates their location. Plans for steel bridges identify the fixed and expansion ends of the structure.

NOTE: Use 6″ x 9″ x $^{7}/_{8}$″ plates under the ends of the steel stringers.

Figure 10-2. Plan Drawing

Foundation

10-7. The foundation plan shows the outline and location of all pier and abutment footings. The survey shows the station number of each footing at the centerline or reference line. Contour lines indicate the lay of the land and outline the banks and other terrain features *(Figure 10-3)*.

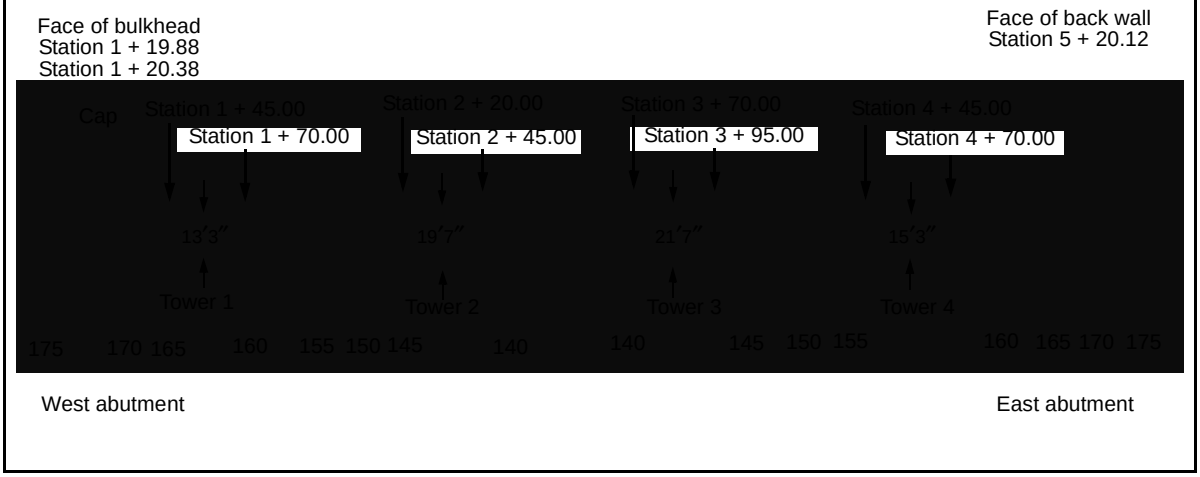

Figure 10-3. Foundation Drawing

Detailed and Cross-Sectional Views

10-8. Detailed drawings and cross-sectional views show how to fabricate or place the parts. Detailed drawings show all the dimensions to the nearest 1/16 inch, the location and size of the connection holes, the details of the connecting parts, and the piece mark. Detailed drawings may also include the construction methods and notes on detail when these are not covered by separate specifications. The cross-sectional views give the overall width of the roadway and any other important dimensions that are constant *(Figure 10-4)*. Cross-sectional views are required when variations in dimensions occur along the length of the bridge.

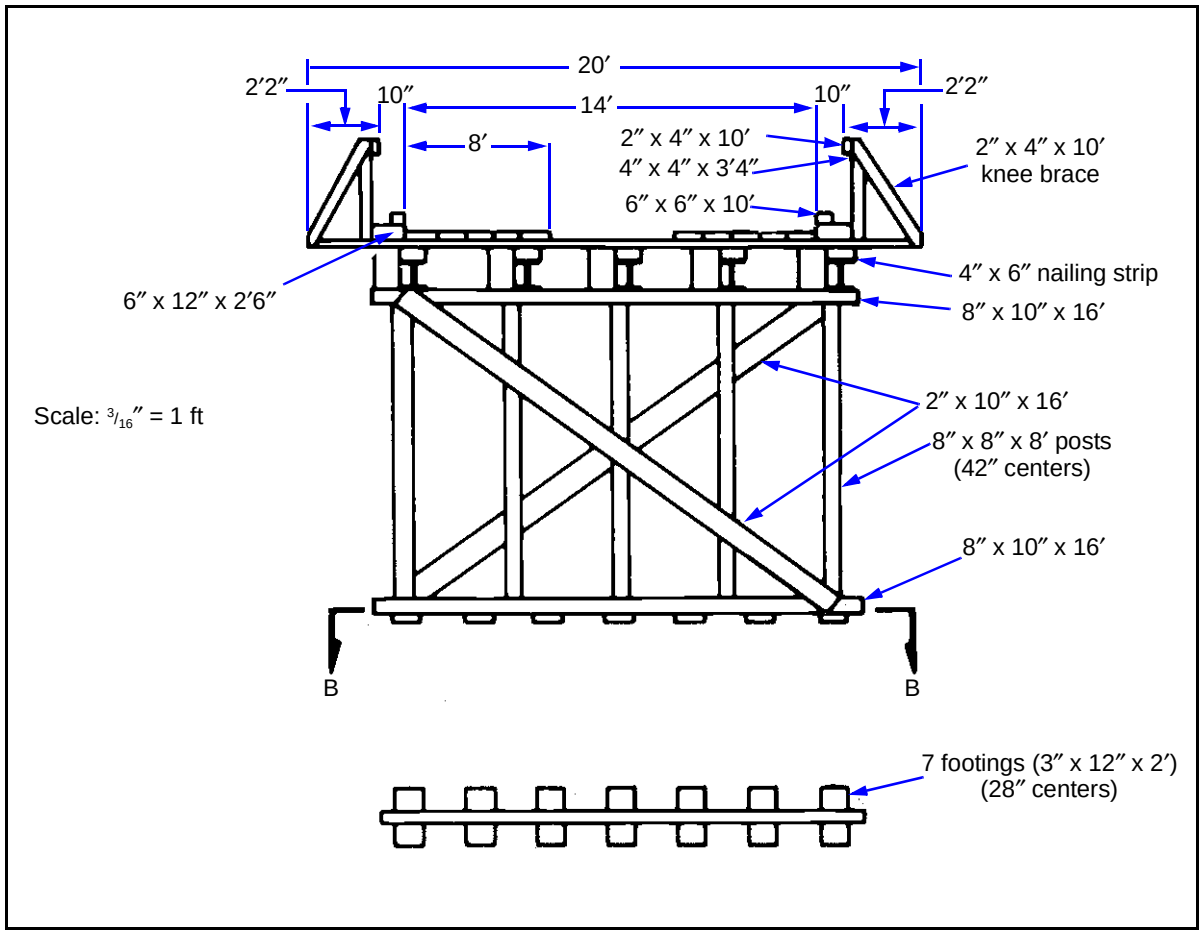

Figure 10-4. Cross-Sectional Drawing

Assembled Views

10-9. Assembled views (commonly called erection plans) show the relationship of the various parts. These drawings include details about how the parts fit together, the process of assembling, and the piece marks of the parts involved *(Figure 10-5)*.

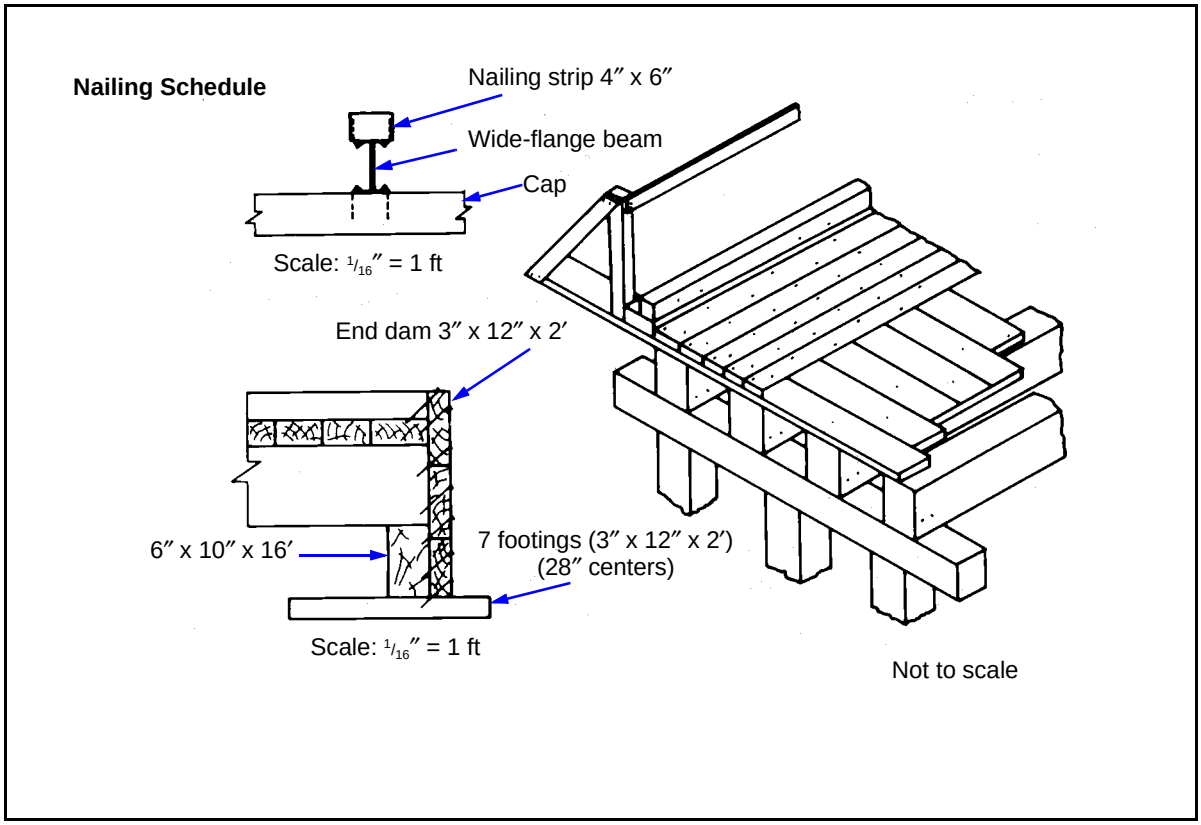

Figure 10-5. Assembled-View Drawing

Specifications

10-10. Separate written specifications may accompany the working drawings. The specifications list the quality and size of materials required. The list does not identify how the quality is determined, only the quality required *(Figure 10-6, page 10-6).*

BILL OF MATERIALS

10-11. The AFCS (discussed in *Chapter 1*) provides the bill of materials for all standard designs. Nonstandard designs require takeoffs from the drawings to develop the bill of materials. The AFCS lists each main member by piece number, piece description, line number, drawing reference, quantity, mark, size, required length, unit weight, and total weight.

LABOR REQUIREMENTS

10-12. The AFCS also lists labor requirements for constructing standard designs, which is an effective template for determining labor requirements of nonstandard designs. Labor requirements are determined only after the working drawings are complete. Sources of labor for bridge construction are combat troops, civilians, and prisoners of war. Civilian labor is preferred to combat troops or prisoners of war. Using prisoners of war as a labor source requires special considerations as outlined in *FM 19-40*.

Type	Material Size	Use
20d nail		General handrail and bracing
60d nail	6″	Tread to deck
60d nail		Nailing strip to WF beam
60d nail		Toenail stringers
60d nail		End dam
60d nail		Toenail curb and curb riser
8″ spike	8″	Deck to stringer
Weld	C 6 x 13 to W12x45	Diaphragms to steel stringers
5/8 ϕ x 24″ driftpins		Stringers to cap
1/2 ϕ x 16″ driftpins		Curb and curb riser to stringer
1/2 ϕ x 16″ driftpins		Cap and sill to posts

Class-50 Single-Lane
Nonstandard
Highway Bridge
Timber-Bent Support

Drawn Approved

Figure 10-6. Sample Specification List

EQUIPMENT REQUIREMENTS AND AVAILABILITY

10-13. A construction plan should identify all the equipment that is necessary for construction. A responsible engineer must ensure that all required equipment and associated, skilled operators are available. If the required equipment is not available, the engineer must determine the appropriate expedient capacity or adjust the design to accommodate the available construction equipment.

SCHEDULING

10-14. Scheduling involves preparing manpower and construction timelines. These schedules coordinate construction effort and resource allocation. Accurate schedules are detailed timeline plans for constructing a bridge. The schedules' accuracy depends on the estimates made during the planning process. These schedules take many forms (tabular, bar graph, coordinate graph, labor block, and so forth). Scheduling is discussed in detail in *FM 5-412*. Two important schedules are manpower and construction.

Manpower

10-15. A manpower schedule lists the total work-hour requirements for each activity that are necessary to complete the bridge. *Table 10-1* contains partial data concerning work hours normally required to perform specific operations. This information would be needed to develop a manpower schedule. Task analysis provides the basis for determining the required manpower to complete the project.

Table 10-1. Required Work Hours for Specific Operations

Operation	Unit	Work Hours per Unit	Personnel in Crew
Steel			
Bolting	Bolt	0.060	2
Drilling	Linear feet	3.200	2
Span erecting	Ton	2.500	9
Pattern making	N/A	N/A	2
Timber			
Bolting	Bolt	0.133	2
Boring	Linear feet	0.100	2
Driving nails	Nail	0.003	1
Other			
Excavating (hand)	Cubic yard	1.000	7
Handling piles	Pile	1.000	7

Construction

10-16. A construction schedule serves as an operational guide for supervisory personnel. It is a means of efficiently coordinating all construction efforts. *FM 5-412* provides detailed guidance for setting up a schedule.

10-17. Construction schedules are useful during all phases of construction.

- **Before construction.** This schedule shows the sequence in which personnel, material, and equipment are required. Information on the schedule allows the construction force to integrate their activities to accomplish maximum efficiency.
- **During construction.** This schedule serves as a logical basis for issuing instructions and maintaining control. Information on the schedule also allows construction supervisors to distribute and ensure that equipment and labor are at the right place at the right time. The information also allows the engineer to analyze the overall status of the bridge and to use this information as a basis for reporting to higher headquarters (HQ).
- **After construction.** Evaluating the schedule allows engineers to recognize errors in estimating, scheduling, and resource use. The evaluation process provides engineers with information for improving the planning process.

SURVEY REQUIREMENTS

10-18. Precision surveying in bridge construction prevents time-consuming mistakes. See *FM 5-233* for detailed surveying procedures. Accurately locate all components before beginning construction. Check the component locations continuously during construction. Place reference stakes from which centers can be reestablished outside of the immediate construction area, if possible. Otherwise, use guard stakes and flags to mark reference-stake locations. If any location stakes or lines are disturbed during construction, accurately relocate them. Establish pile cutoffs using instrument procedures, not by reckoning or rough measurements.

Equipment

10-19. Good equipment is essential for both timber and steel bridges. The equipment used in construction surveying is a transit, a level, a steel tape, stakes, and steel tacks. Compare the tapes used for surveying with the tapes used for fabricating and framing parts to ensure that discrepancies do not exist between the tapes. After driving location stakes, add steel tacks to the stakes to mark exact reference points.

Horizontal and Vertical Control

10-20. Establish benchmarks near each end of the bridge and at other convenient locations near the construction area. Use a transit and tape and, when necessary, triangulation to control horizontal measurements. Use differential leveling to control vertical measurements and to locate accurately all bearing supports. Use the bridge centerline as a reference point for all centering measurements.

Centerlines

10-21. The construction plan establishes the bridge centerline. The bridge centerline usually coincides with the site-survey centerline. Mark the centerline with stakes set at each end of the bridge.

Foundation Placement

10-22. A starting point at one abutment (fixed by the construction plan) establishes the centerline locations of the other abutment and of each foundation. After finishing the foundations, accurately mark the centers of the bearing supports on the foundations.

Anchor Bolts

10-23. Use particular care in locating anchor bolts. Check the bolt locations after completing the forms and immediately before placing the concrete. A wood template is helpful when positioning anchor bolts.

Working Platforms

10-24. Where performing direct measurements on the ground is impossible, build temporary platforms at the centers of each bent. Use these platforms for measuring and working.

Piles (In Water)

10-25. Pile placement in riverbeds or streambeds presents a measurement problem. See *FM 5-134* for techniques on accurately placing piles in riverbeds or streambeds.

Grillages

10-26. Construct steel grillages in the fabrication yard. Because of their weight, grillages require a crane for placement. Set grillages in concrete bedding to obtain a full, uniform bearing capacity.

MATERIAL PREPARATION, TIMBER FRAMING

10-27. Framing is the process of cutting, shaping, and boring timber. Consider the information below when preparing timber.

WOOD PROPERTIES

10-28. Unlike other structural materials, wood does not have the same physical properties in all directions. In compression, tension, and bending, a wood's strongest dimension is in the direction of the grain. In shear, a wood's strongest dimension is across the grain. Wood splits easily along the grain but not across it. Wood shrinks more across the grain than with the grain. Timbers used together should be of the same type and equally seasoned.

WORKMANSHIP

10-29. Construction workers should be experienced with woodworking tools. Framing, cuts, and dimensions must be accurate to ensure proper fit and adequate capacity. Carpentry tools and framing methods are discussed in *FM 5-426*.

LAYOUT

10-30. Use the platform or the nonplatform method to lay out bents and towers:

- **Platform method.** Draw the outline of the bent or tower to be constructed onto the platform. Lay timbers on the outline and mark them for cutting. Mark the timber as to its location in the structure before removing the timber from the platform. *Figure 10-7, page 10-10,* shows the procedure for aligning the timber piles to be used for bents and towers.
- **Nonplatform method.** Carefully measure and mark each post for cutting. To eliminate variations in measurement, use a 1- by 2-inch measuring stick, premarked with the controlling dimensions. Use the measuring stick in place of a tape or rule.

MATERIAL PREPARATION, STEEL FABRICATION

10-31. Lay out a fabrication yard to suit the fabrication procedure and the size of the bridge *(Figure 2-1, page 2-4)*. The yard must be on firm, level ground and should provide ample space and easy access to the bridge site. Divide the yard into the following areas:

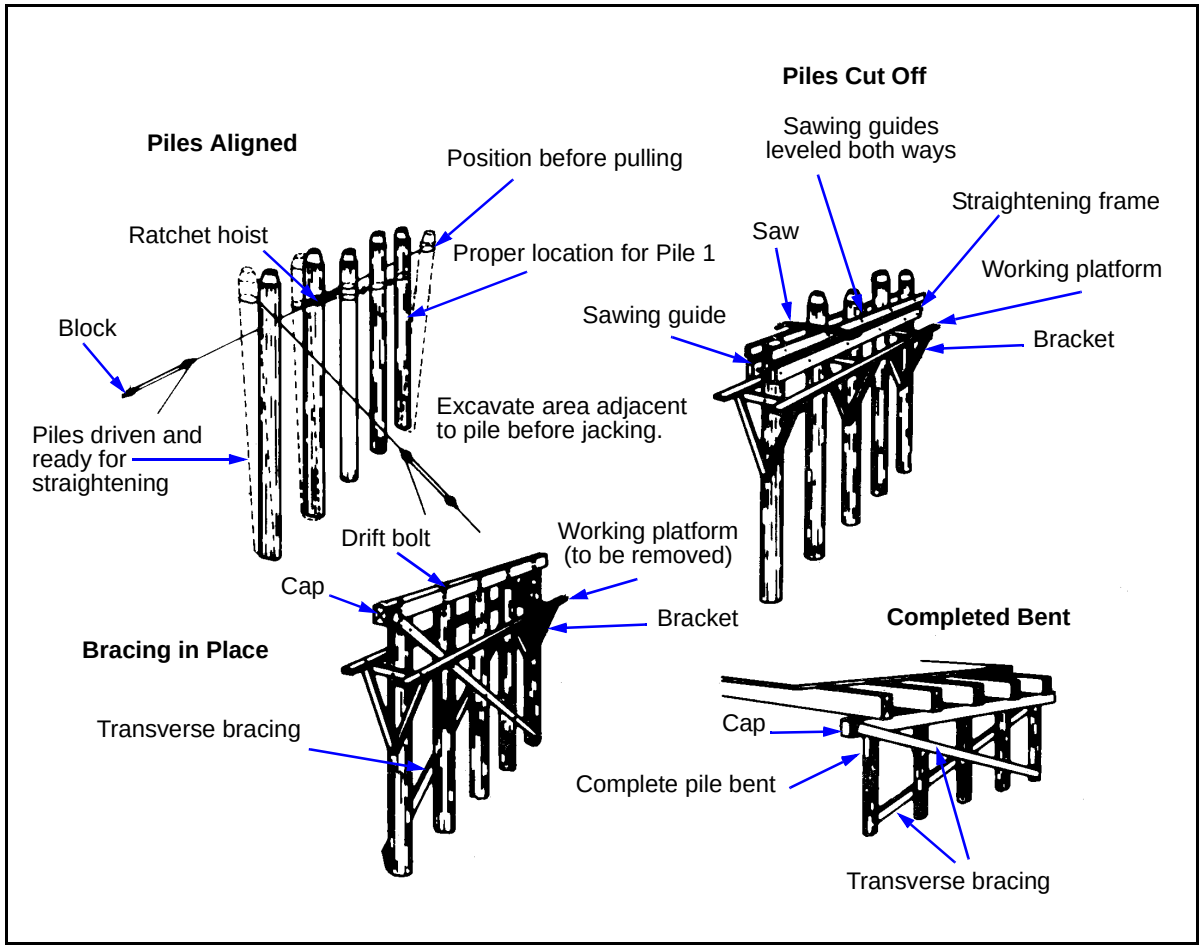

Figure 10-7. Procedure for Aligning Timber Piles into Bents

- **Raw-material storage.** Provide an area for stock-length steel. As material arrives, check its condition and store it with other materials of the same size. Storage should allow easy access, and those materials that will be needed first should be near the front of the storage area.
- **Layout area.** Provide an area for laying, cutting, and drilling parts.
- **Assembly area.** Provide an area for processing (drilling, reaming, bolting, riveting, welding, and so forth). This area should also have waist-high blocking to permit work on the underside of the assembly.
- **Component storage.** Provide an area to store fabricated assemblies.

TOOLS AND EQUIPMENT

10-32. Tool and equipment selection depends on the fabrication method. Use only steel squares, rulers, and tapes for measurement. A crane should be available for loading, unloading, turning assemblies in process, and moving finished assemblies. Personal protective equipment (goggles, safety belts, and so forth) should also be available.

WORK SCHEDULE

10-33. Start fabricating steel components early enough to allow their availability when needed during the erection process. Organize work on an assembly-line basis, and assign a crew responsibility for each class of members or components.

SAFETY

10-34. Commanders are responsible for safety. Safety controls should outline proper conduct of personnel during construction activities.

PERSONNEL

10-35. Personnel should—

- Stand clear of suspended loads.
- Stand away from and out of the line of the ropes that are under heavy strain.
- Check the equipment and rigging before swinging heavy loads.
- Move heavy loads slowly.
- Keep heavy loads under control at all times.
- Consider the load's inertia when determining how adequate a rig is.
- Guide the loads to prevent them from swinging.
- Never lift the loads in heavy winds.
- Never swing the loads over working personnel.
- Never ride the loads being lifted or placed.
- Stand clear of moving loads and their path of movement.
- Never stand under a block and tackle.
- Never locate matching holes with fingers or hands.
- Never stand or work under areas where falling tools or parts are a hazard.
- Use all the required personal protective devices and other safety equipment.
- Never sit or stand on deck rails, shafts, winch heads, or other places where danger of falling exists.
- Never operate or ride equipment unless authorized.
- Take time to construct adequate working platforms properly.
- Lift heavy objects with their legs, not their back.
- Never leave intermediate construction unattended without adequate temporary bracing.
- Never walk near the edge of a deck until it has been securely fastened to the stringers.

SCAFFOLDS

10-36. Personnel should observe the following guidelines:

- Scaffolds should be strong enough to support the intended loads and secure against sliding and overturning.

- Scaffolds over 6 feet high should have a guardrail on the back side.
- Loose boards should not extend beyond their supports.
- Nails used in scaffolds should be driven fully and not used in tension.
- Scaffold horses should be supported evenly and nailed to the platform on which they are used.
- Ladders should be blocked at the foot or tied at the top to prevent sliding.

TACKLE

10-37. Personnel should—

- Inspect the tackle frequently.
- Check the wire rope for fraying. Remove the wire rope when 4 percent or more of the total number of wires in the rope are broken.
- Use wire rope slings instead of chain slings whenever possible.
- Place wood blocks between slings and steel loads to prevent slings from being cut by the load.
- Use shackles instead of hooks for attaching blocks (mouse the blocks if using hooks).
- Always use blocking or cribbing to secure the necessary height under the jacks. Never set the jacks on a post or strut where the jacks might kick sideways under strain.
- Never permit loose lines to hang from the structure or from equipment.

HEAVY EQUIPMENT

10-38. Personnel should—

- Always inspect all equipment thoroughly for proper operation before use.
- Never operate defective equipment.
- Never mount or dismount equipment when it is moving or in operation.
- Never ride (as a passenger) equipment not intended to transport passengers.

ERECTION-EQUIPMENT CAPACITY

10-39. Examine each principal member and subassembly to determine if it is possible to erect it safely with available equipment. If not, modify the erection procedure or obtain the necessary equipment to do the work. Test each piece of equipment at the site before attempting to lift subassemblies, especially if the subassemblies will stress the equipment near its maximum capacity.

SPECIAL EQUIPMENT

10-40. *Table 10-2* shows a list of special equipment that is required for erecting a bridge. These tools are needed in addition to the small hand tools normally organic to a construction unit.

Table 10-2. Special Equipment

Description	Number Required
Crane shovel (track-mounted, 20-ton, 3/4-cubic-yard)	1
Crane shovel (crawler-mounted, 12 1/2-ton, 3/4-cubic-yard)	2
Lead (pile-driving, steel-hanging)	1
Hammer	1
Jetting set (portable)	1
Compressor (air, trailer-mounted, 600-cubic-foot-per-minute)	2
Mixer (concrete, gas-driven, trailer-mounted, 16-cubic-foot)	1
Wheelbarrow (3-cubic-foot) (with a steel tray and handles)	12
Pump (55-gallon-per-minute [GPM], centrifugal, gas-driven, base-mounted, 2-inch discharge)	1
Drill (steel, pneumatic, portable, nonreversible)	8
Tool kit (rigging, wire-rope)	1
Tool kit (blacksmith, general)	1
Tool kit (pipe-fitting)	1
Survey set (general-purpose)	1

HAND TOOLS

10-41. A construction unit also requires hand tools. Some special tools are required for erecting steel bridges. Examples are sledgehammers, crescent and ratchet wrenches, driftpins, long-handled structural-offset wrenches, and 2-foot connecting bars.

RIGGING

10-42. Refer to *FM 5-125* for additional information on rigging. Rigging tools and their uses are discussed in detail.

TRUCK- AND CRAWLER-MOUNTED CRANES

10-43. Truck- and crawler-mounted cranes are preferred for erecting bridges. They can enhance the construction process by moving out over successively completed spans. If conditions permit, operate these cranes from the ground. When working over water, place these cranes on rafts or barges. Truck-mounted cranes are suitable for erecting structures of moderate span. On larger bridges, use cranes to supplement the main erection units. Truck-mounted cranes are highly mobile but require a firm, level operating surface.

10-44. Crawler-mounted cranes are better suited for general erection use, but they are less mobile than truck-mounted cranes. Crawler-mounted cranes are capable of operating over rough ground and ground that is too soft for truck-mounted cranes. Crawler-mounted cranes can be used in water that is no deeper than the top of the crawlers (if the bottom is firm).

DERRICKS

10-45. Generally, guy or stiff-leg derricks will be used. Neither is economical unless continued operations are within reach of their booms. Guy derricks consist of a mast, a boom pivoted from the foot of the mast, guys, and tackle. If the guy lines to the top of the mast are clear of the end of the boom, the boom may swing completely around the mast. Loads are lifted and moved by manpower or by an engine-driven hoist.

10-46. Stiff-leg derricks consist of a mast held vertically by two inclined struts connected to the top of the mast. The struts are spread between 60 and 90 degrees and are attached to sills extended from the bottom of the mast to provide stability. The mast and boom of the stiff-leg derrick is capable of swinging in a 270-degree arc. Refer to *FM 5-125* for more information on derrick fabrication.

CABLEWAYS

10-47. The medium cableway developed for military operations is capable of effectively erecting timber and steel towers and launching light stringers. The maximum span is 1,200 feet. The tower height is 63 feet. The rated capacity is 3,000 pounds, but a load of 4,000 pounds is possible if using caution during lifting operations. Installation requires about 6 hours (by an experienced unit). The total weight of the cableway is 20,000 pounds, which permits it to be transported on four trucks. Install the cableway with the base of the cableway towers about at grade and on the centerline of the bridge being constructed. Refer to *FM 5-125* for more information on cableway installation.

HOISTS

10-48. Drum hoists consist of one or more winding drums, a train of reducing gears, and a power source. They may carry one or more winches or capstan heads for handling secondary lines. These hoists are attached to construction equipment such as derricks or cranes. A winch configured for attachment to a boom or mast is called a *crab hoist*. Winches are used with gin poles, shears, and derricks. Chain hoists are used for raising and holding loads and are particularly useful when accurate load placement or adjustment is necessary.

JACKS

10-49. Jacks are used to raise or lower heavy loads short distances. They are available in capacities from 5 to 100 tons. Small-capacity jacks usually employ a rack bar or screw as the lifting mechanism. Large-capacity jacks are normally operated hydraulically. The following common jack types are used in bridge construction:

- **Pushing and pulling.** These are screw jacks of 10-ton capacity. They have end fittings, which permit the pulling together or the pushing apart of components. Their principal function is to spread or brace parts or to tighten lines or lashings.
- **Ratchet leveling.** These are rack-bar jacks equipped with foot lifts. The foot lifts allow low-clearance loads that are close to the base of the jack to be lifted.
- **Hydraulic.** These jacks operate on the piston-cylinder principle. Oil pumped through a line into a liquid-tight cylinder forces the piston to move against the load. Ordinarily, a slow oil leak prevents the jacks from holding the load in an exact position over long periods.

FALSEWORK

10-50. Falsework denotes any construction intended to assist erection operations only. Falsework includes temporary towers, bents or trestles, fixed and floating platforms, staging, runways, ladders, and scaffolding, that are later removed or abandoned. Falsework is constructed from local materials whenever practical.

BENTS

10-51. Falsework bents are used to support long spans that are erected before splicing is completed or before a permanent tower or a bent supporting the outer end has been completed. Falsework bents must be well-built and securely braced.

TRESTLES

10-52. Falsework trestles allow erection equipment to operate over shallow water or soft ground. A trestle is built alongside a permanent bridge, allowing equipment to work on foundations, towers, and bents of long-span bridges. The trestles should be as light as possible and just wide enough to support the equipment that will use it.

PLATFORMS AND SCAFFOLDING

10-53. Drilling, bolting, and nailing are ordinarily done from scaffolds. These scaffolds are carried up from story to story as erection advances. Operations such as fitting-up, riveting, and welding require hanging scaffolds called floating platforms. Two workers can easily move these platforms from connection to connection. Two of these platforms are usually needed at each connection.

ERECTION-EQUIPMENT TECHNIQUES

10-54. A step-by-step erection procedure and the necessary, or preferred, equipment are determined in the planning stage. Bridge size, site conditions, skill of construction personnel, and available equipment determine which construction technique to use. Detailed erection plans should include equipment requirements, locations, and capabilities and the tabulated

weights of all the bridge members to be erected. Various equipment configurations and their employment are detailed in the paragraphs below.

GROUND-BASED CRANES

10-55. Where site conditions permit, erect long-span bridges of moderate height from ground level or from rafts. A medium-size, crawler-mounted crane is more maneuverable than a truck-mounted crane. A crawler-mounted crane is also capable of operating over rougher and softer ground. Follow the sequence below for this method of construction:

Step 1. Raise the tower supports (if any).

Step 2. Raise the outside stringers. Use two cranes or a combination of a crane and gin poles to raise and place both ends of the stringer simultaneously.

Step 3. Raise the interior stringers using the same technique as used for the outside stingers.

Step 4. Install the diaphragms and the bracing.

Step 5. Complete all connections.

Step 6. Install the deck.

Step 7. Move to the next span and repeat the process.

DECK-BASED CRANES (WITHOUT FALSEWORK)

10-56. This method is best when the economy of material, labor, and time are important and the bridge consists of relatively short spans. A medium-size, truck-mounted crane is appropriate for this work. The technique used will depend on the substructure.

Pile Bents and Piers

10-57. After delivery of any prefabricated parts to the construction site, proceed as follows:

Step 1. Construct the first pile bent or pier with the crane at the abutment.

Step 2. Set the stringers for the first span between the abutment and pile bent or pier.

Step 3. Lay a temporary deck capable of supporting the crane.

Step 4. Move the crane onto the temporary deck. Park the crane at the first pile bent or pier. Repeat the above steps for each subsequent span.

Framed Timber Towers

10-58. After the foundations have been completed, proceed as follows:

Step 1. Set the foundation sills and anchor to the piles with scabs or drift bolts or to the foundations with anchor bolts.

Step 2. Place the preassembled tower bent on the sill. Construct multistory towers one story at a time.

Step 3. Brace the sill and tighten the anchor bolts or other connections.

Step 4. Complete the tower using the steps above.

Step 5. Set the stringers and install the deck.

Step 6. Install the longitudinal tower bracing.

Step 7. Move the crane onto the deck and remove the temporary bracing. Repeat the above steps for each subsequent span.

DECK-BASED CRANES (WITH FALSEWORK)

10-59. Falsework is advantageous when building moderately high bridges over water or bridges over ground that is too soft to support the erection equipment. This method of construction is not justified for bridges over 40 feet high. Falsework bents may be pile bents or well-braced timber bents. Allow for 1 to 2 feet of blocking between caps and the bottoms of stringers when this falsework is in position. Follow these steps when constructing a 90-foot span using falsework:

Step 1. Construct a falsework bent about 20 feet from the abutment.

Step 2. Set the first sections of the completed stringer between the abutment and the first falsework bent. Block the stringer sections to prevent them from overturning.

Step 3. Install temporary decking and move the crane onto the deck.

Step 4. Construct the second falsework bent about 20 feet from the first falsework bent.

Step 5. Set the second sections of the completed stringer between the falsework bents, splicing the stringer sections with temporary splices. Do not install the final connections at this time.

Step 6. Install temporary decking and move the crane onto the new deck.

Step 7. Continue this process until the full 90-foot span rests on the permanent intermediate support and the abutment.

Step 8. Align all the stringer sections and complete the permanent connections.

Step 9. Install the diaphragms and bracing.

Step 10. Remove the falsework.

STEEL GIN POLES

10-60. Gin poles are necessary for erecting high steel towers. Each tower column requires a separate gin pole. Use single-drum pneumatic hoists for hoisting lines, when possible. Use hand winches for holdback lines. Gin poles (along with shears) can also be used to place stringers *(Figures 10-8* and *10-9, pages 10-18* and *10-19)*. The following procedure shows how to erect a multistory tower:

Step 1. Set the gin poles on the blocking that is adjacent to the column foundations.

Step 2. Set the columns on their foundations and install and tighten the anchor bolts.

Step 3. Install the transverse bracing of the first story, bottom strut, diagonals, and top strut. The top strut is the bottom strut of the next story. Use drift pins or other temporary devices for all bracing connections until the whole tower is plumbed and squared.

Step 4. Install longitudinal bracing on the first story using the same process as transverse bracing.

Step 5. Raise the gin poles (using tackle) to the top of the first story in preparation for erecting the next story. Support the gin poles laterally by using the brackets that are installed on the columns. Use temporary straps to guide the gin poles as they are raised.

Step 6. Set the columns for the next story and temporarily splice them to the last story's columns. Erect the column caps by using temporary connections. Lean the gin poles away from the columns during cap erection.

Step 7. Install the transverse diagonal bracing.

Step 8. Install the longitudinal bracing.

Step 9. Repeat the above process for each subsequent story of the tower.

Step 10. Install the stringers.

Step 11. Plumb and square the tower.

Step 12. Install the permanent connections in the tower components.

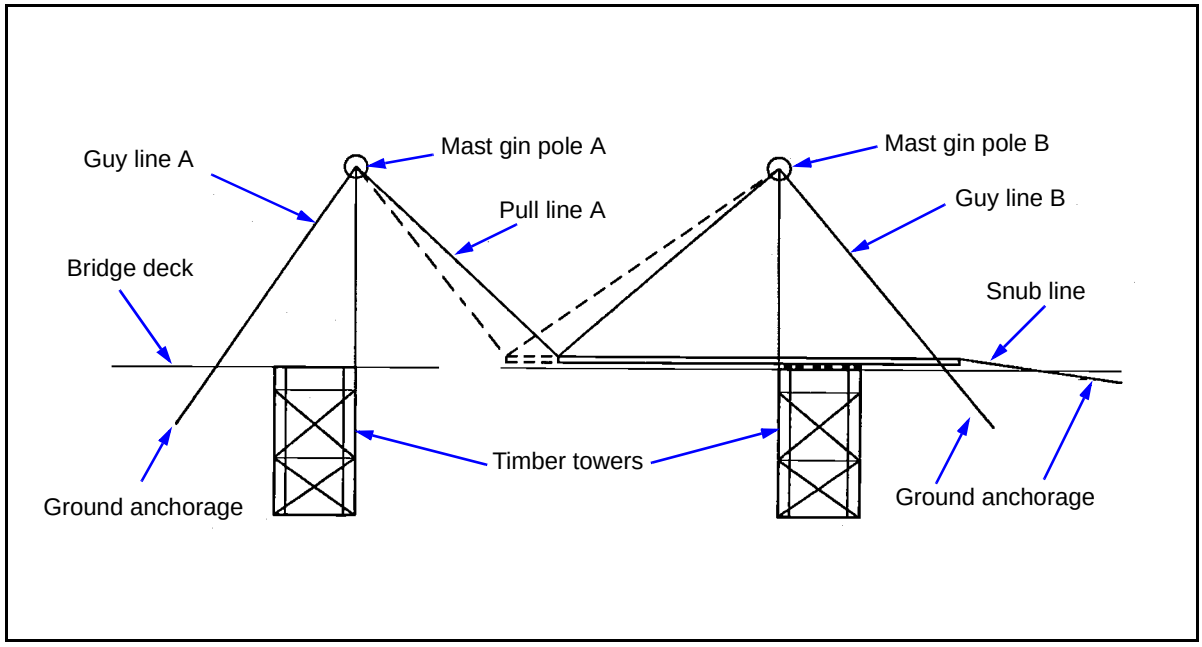

Figure 10-8. Launching Stringers by Gin Poles

DERRICKS

10-61. A derrick is the timber counterpart of a gin pole and is used to erect tall timber towers. Only one derrick is needed per tower. A derrick is fabricated from timber that is equal in size to the tower materials and the Class IV or organic equipment. Hand winches provide control through hoist and boom lines. Derricks are anchored on the cap or sill. Erect a multistory tower as follows:

Step 1. Set and anchor the sill to the foundation.

Step 2. Assemble the derrick as shown in *Figure 10-10, page 10-20*. Anchor the mast guy lines to the extreme corners of the tower.

Step 3. Set the first of the prefabricated tower bents (end bents) on its sill. Each prefabricated bent consists of the posts, cap, and transverse bracing for

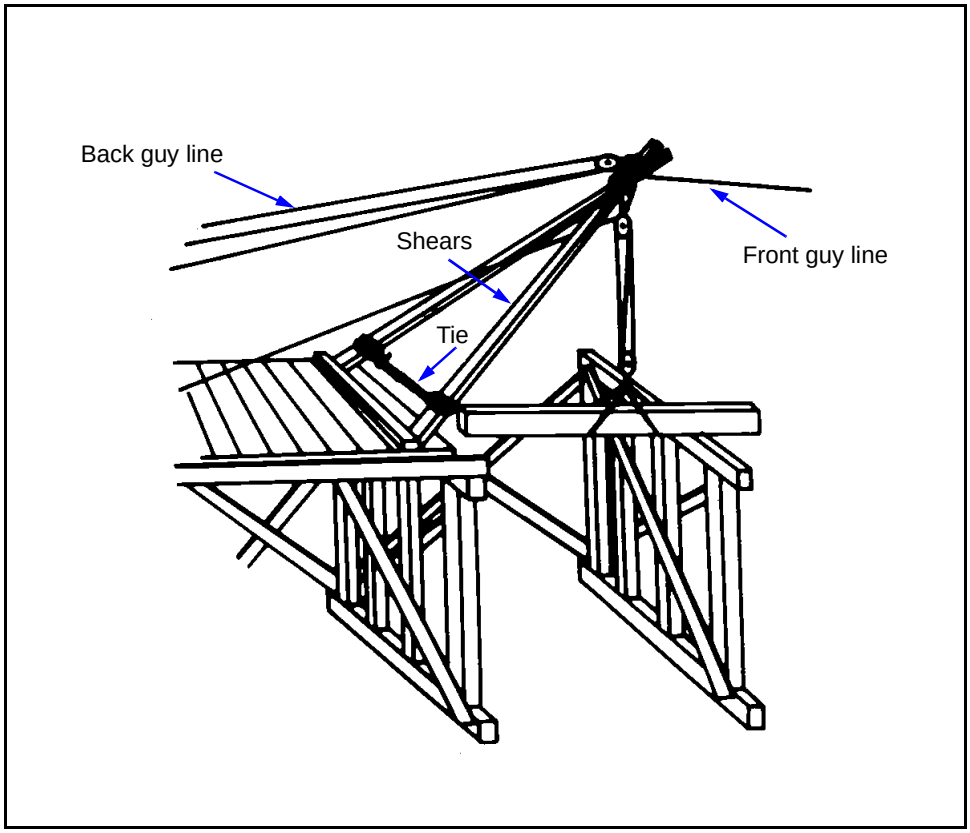

Figure 10-9. Launching Stringers by Shears

each story. Spread the bracing slightly so that it does not obstruct installation over the sill. Reposition the guy lines before setting the next (interior) bent. Never remove more than one guy line at a time during an operation.

Step 4. Finish setting the remaining bents (end bent, then interior bent) in a similar manner, using temporary bracing to hold the sections upright.

Step 5. Install the longitudinal bracing on the first story.

Step 6. Move the derrick onto the cap of the first story. Repeat the above steps for each subsequent story.

DERRICK ELEVATION

10-62. Refer to *Figure 10-11, page 10-21,* and the following procedure to raise the guy derrick:

Step 1. Attach the tackle guys to the boom point. Raise the boom as closely to the mast as possible, and secure the guys to the boom point.

Step 2. Release the boom tackle from the point of the boom, and lash the tackle near its base *(Figure 10-11A).*

Step 3. Lower and seat the boom, using the mast as a gin pole *(Figure 10-11B).*

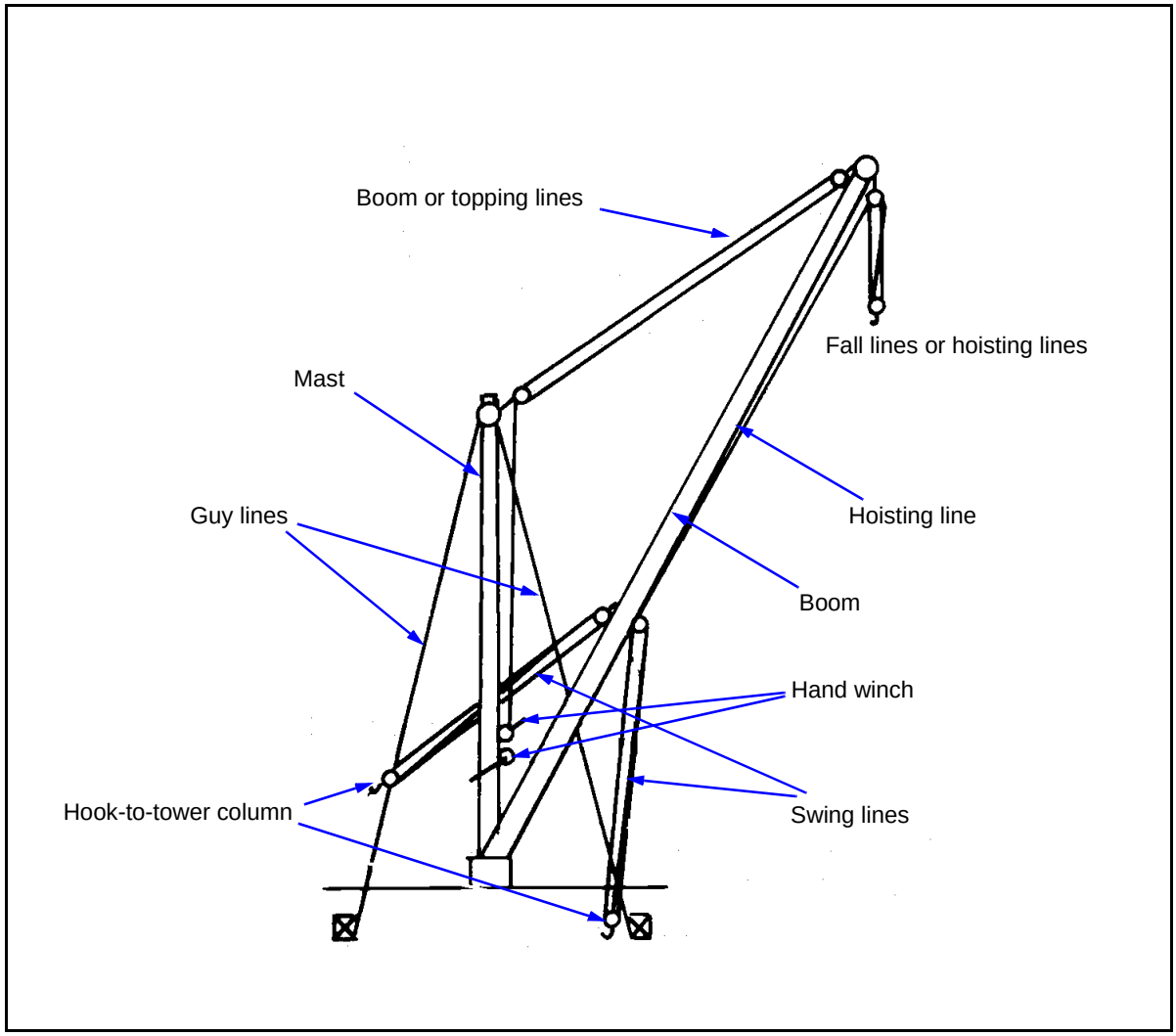

Figure 10-10. Guy Derrick in Working Position

Step 4. Release the boom tackle from the boom, and connect the hoisting tackle to the mast with lashing far enough down to lift the derrick at least 13 feet *(Figure 10-11C).*

Step 5. Slacken the guy lines, and raise the mast and sill (using the boom as a gin pole) to the next higher level and seat it on the timber *(Figure 10-11D* and *E).*

Step 6. Release the hoisting tackle from the mast, and lash the boom tackle to the boom near its base *(Figure 10-11F).*

Step 7. Raise the boom, using the mast as a gin pole, and connect the boom at the next higher level. Use the guy lines to guide the boom as it is raised *(Figure 10-11G).*

Step 8. Connect the tackle as shown in *Figure 10-10,* and release the guy lines to the boom point.

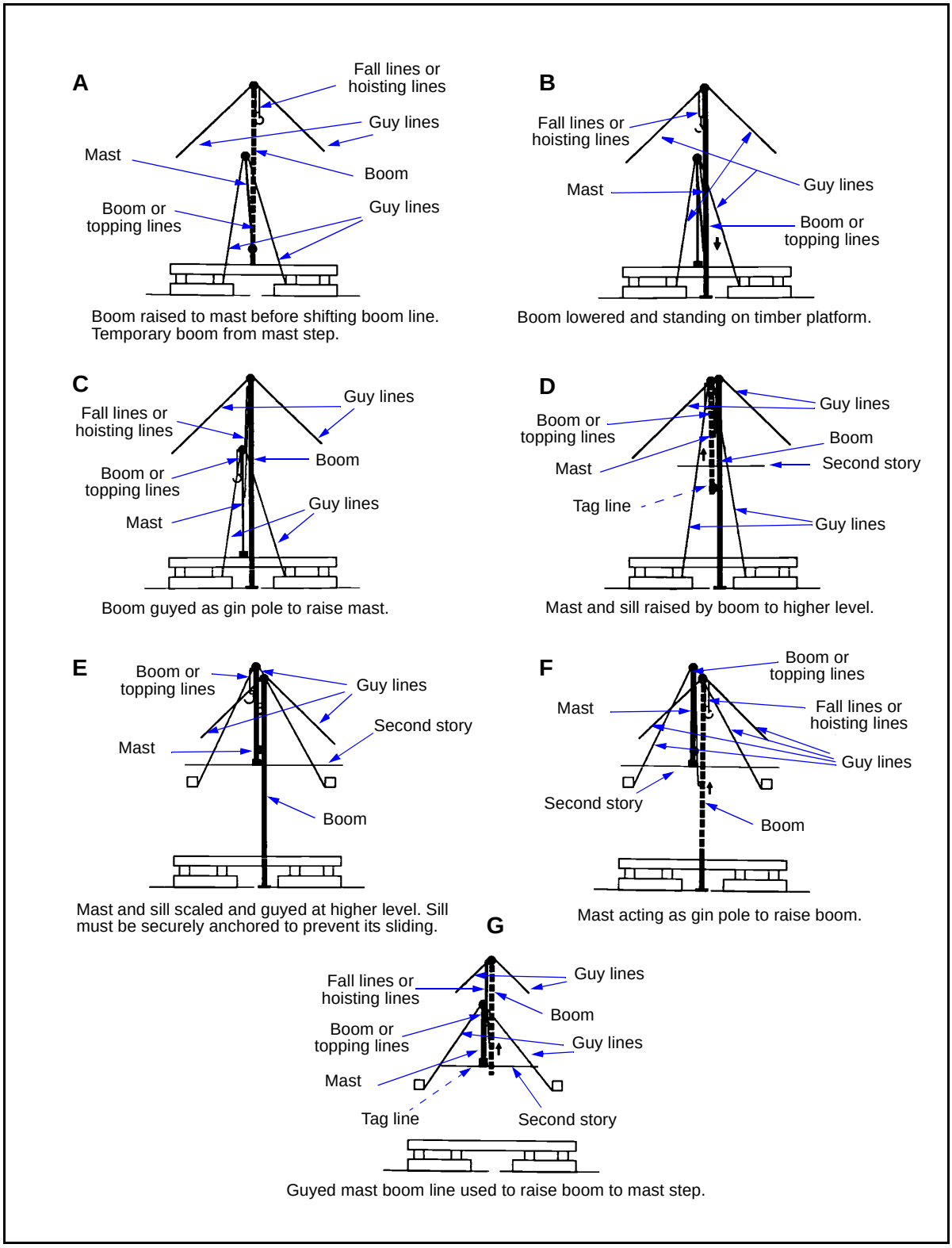

Figure 10-11. Raising the Guy Derrick

SPECIAL LAUNCHING METHODS (STEEL ERECTION)

CRANES

10-63. Whenever a suitable heavy crane is available and can be maneuvered effectively, use it to place the beams directly. The operator must be well trained to ensure safe operation.

LAUNCHING NOSE

10-64. This method uses a nose (extension to a beam) consisting of a lighter beam than the one being placed. This method is practical where there is only one span of two beams under construction. Use *Figure 10-12* to determine the required length of the launching nose. *Figure 10-13* shows this procedure.

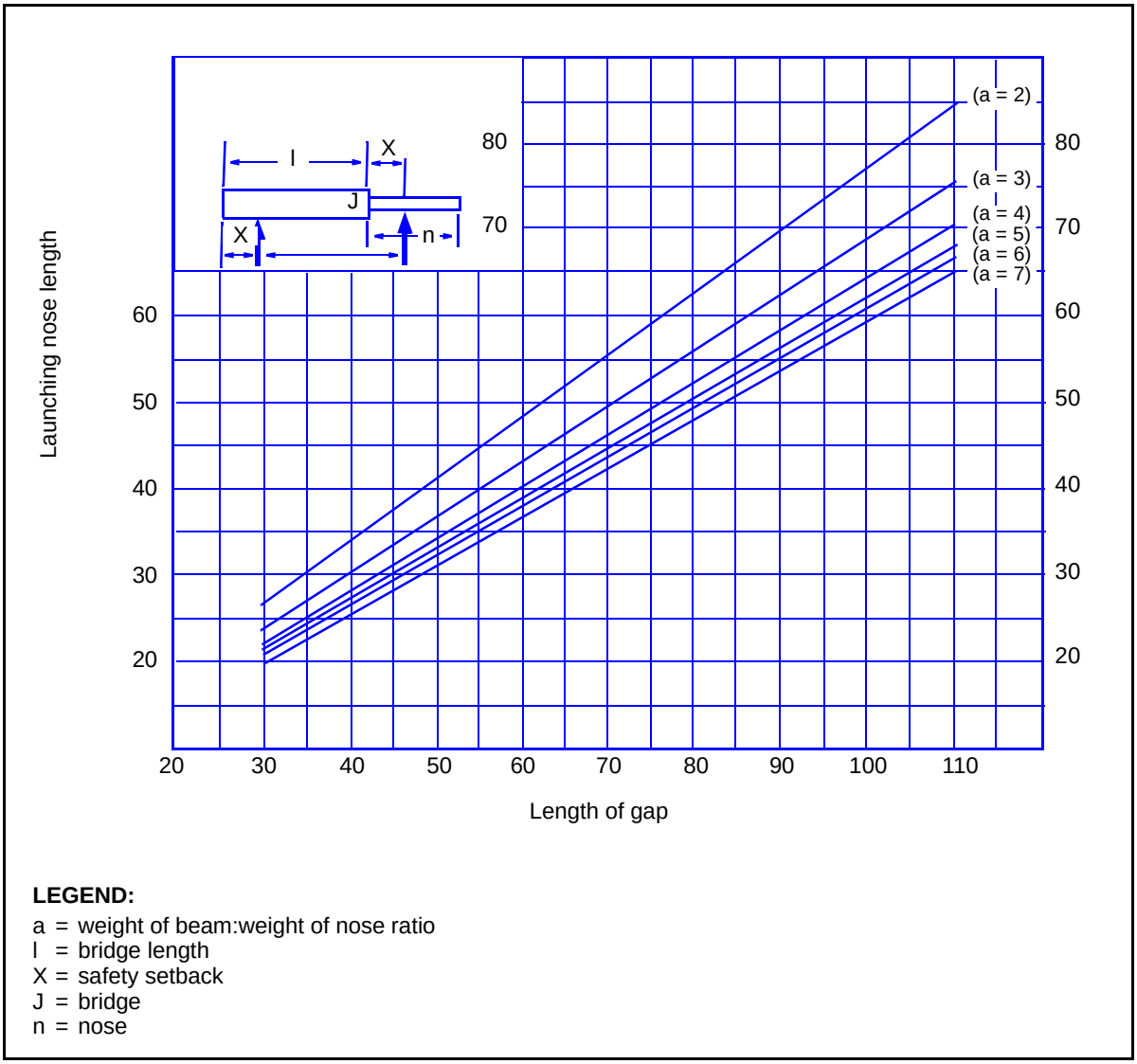

Figure 10-12. Required Length of the Launching Nose

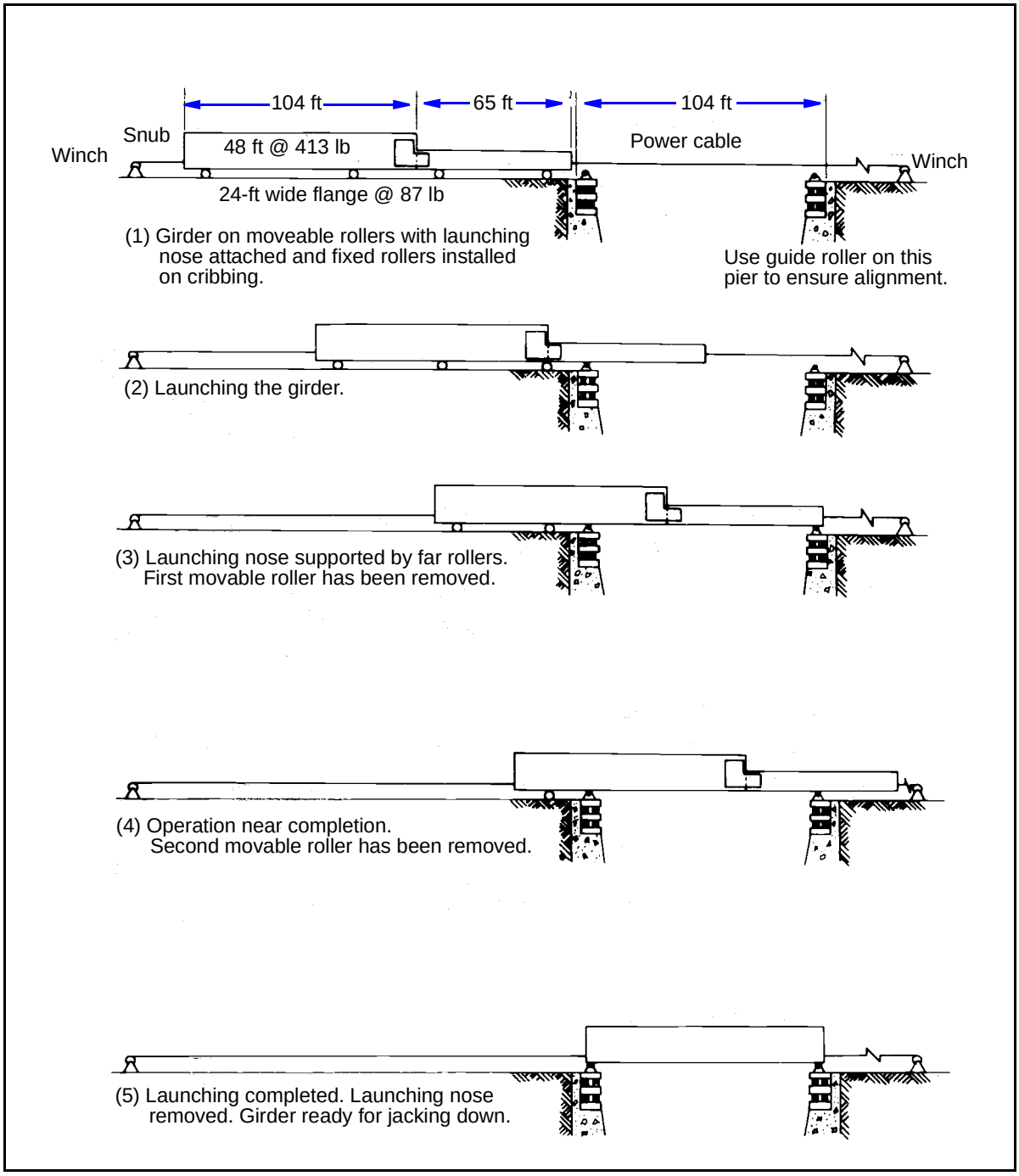

Figure 10-13. Launching Heavy Girders with a Light Launching Nose

COUNTERWEIGHT BEAM

10-65. Use this method if there is more than one span to a bridge, especially when the spans are of equal length or if there are four or more beams in each span. Site and material considerations may dictate a combination of the

launching-nose method and the counterweight method. When constructing several spans, launch the spans one at a time *(Figures 10-14* and *10-15).*

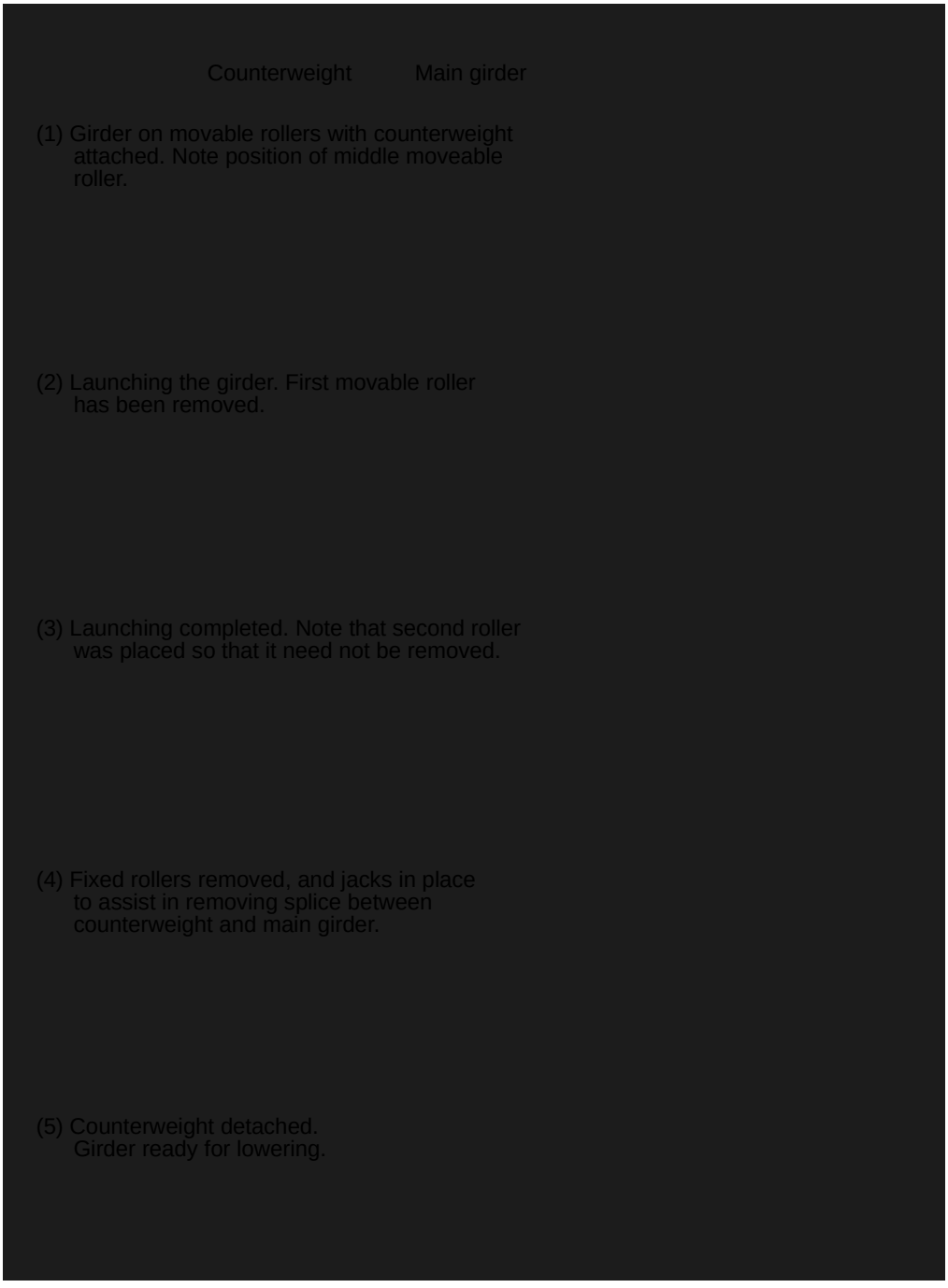

Figure 10-14. Launching Heavy Girders With an Equivalent-Weight Beam

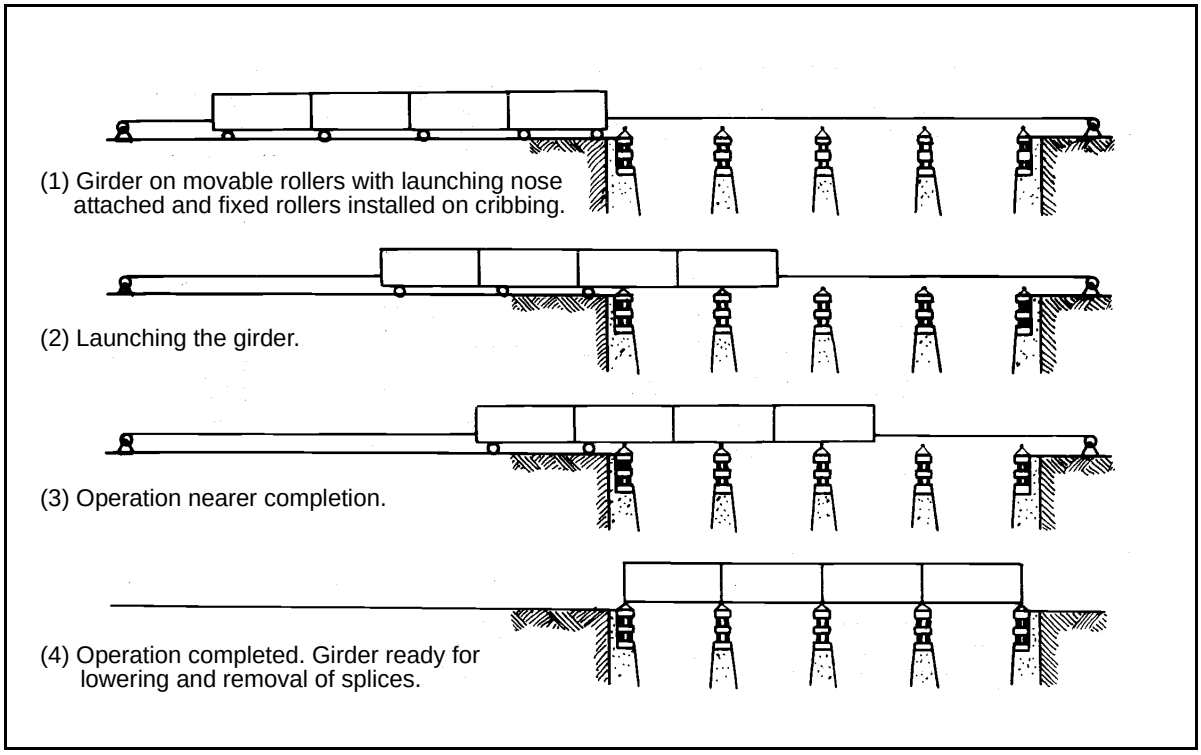

Figure 10-15. Launching Four Girders Simultaneously Over Four Equal Spans

LAUNCHING ROLLERS

10-66. Launching rollers may be used to erect a bridge. *Figure 10-16* shows a dolly made from two, 50-ton launching rollers.

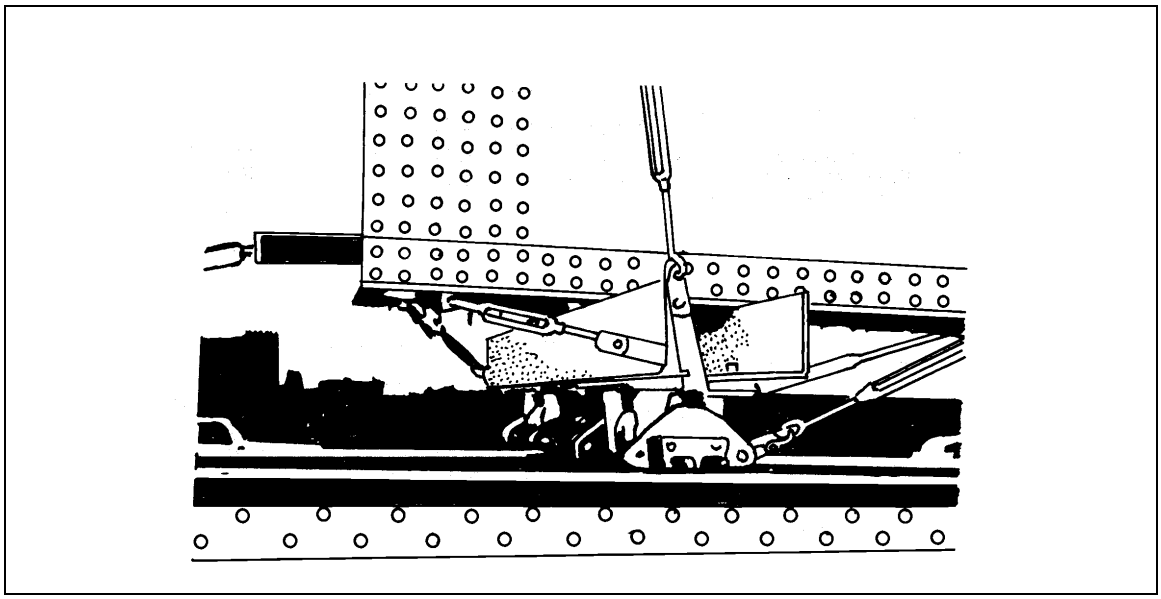

Figure 10-16. Dolly Made From Two, 50-Ton Launching Rollers

CABLEWAYS

10-67. Cableways *(Figure 10-17)* may be necessary if one or more of the methods described above will not work. End towers are usually constructed from standard steel trestles. The tension developed in the main cables should be considered. Evaluate the anchors carefully, since the cable tension developed by applying heavy loads can be very great. If the sag allowed is too great, it may be difficult to lift and seat a beam at the far pier. If the sag is small, the cable tension may be too high. Exact calculations for determining the amount of sag are not practical because of cable stretch from previous use and because cable stresses may be near the elastic limit of the steel.

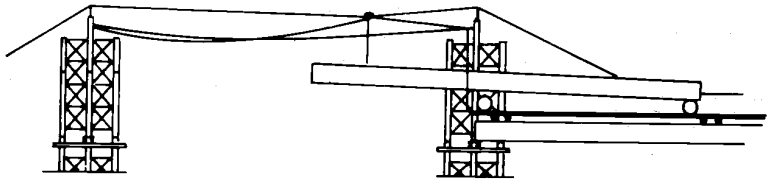

(1) Beam being attached to cableway.

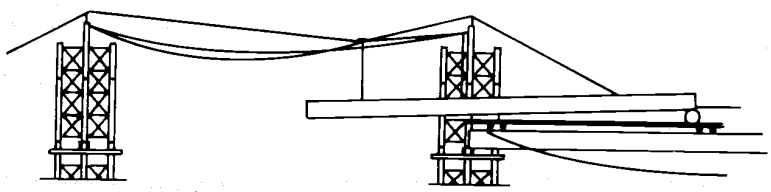

(2) Ready for launching. One end of beam supported by cableway. Trailing end of beam on movable roller.

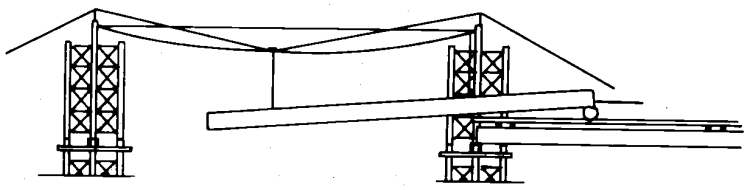

(3) Launching the girder.

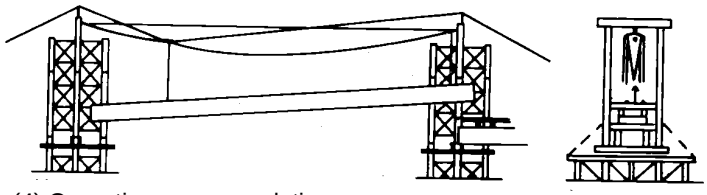

(4) Operation near completion.

Figure 10-17. Launching Heavy Beams by Cableway

10-68. Because cables elongate under a load, ensure that there is a way to loosen the cables after launching the beams. Doing so allows easier release of the beam from the hangers. Special take-up devices in the main cables may be needed.

CRIBBING METHOD AND RAILWAY-ENGINE OR ERECTION-CAR METHOD

10-69. *Figure 10-18* shows the cribbing method. *Figure 10-19, page 10-28,* shows the railway-engine or erection-car method.

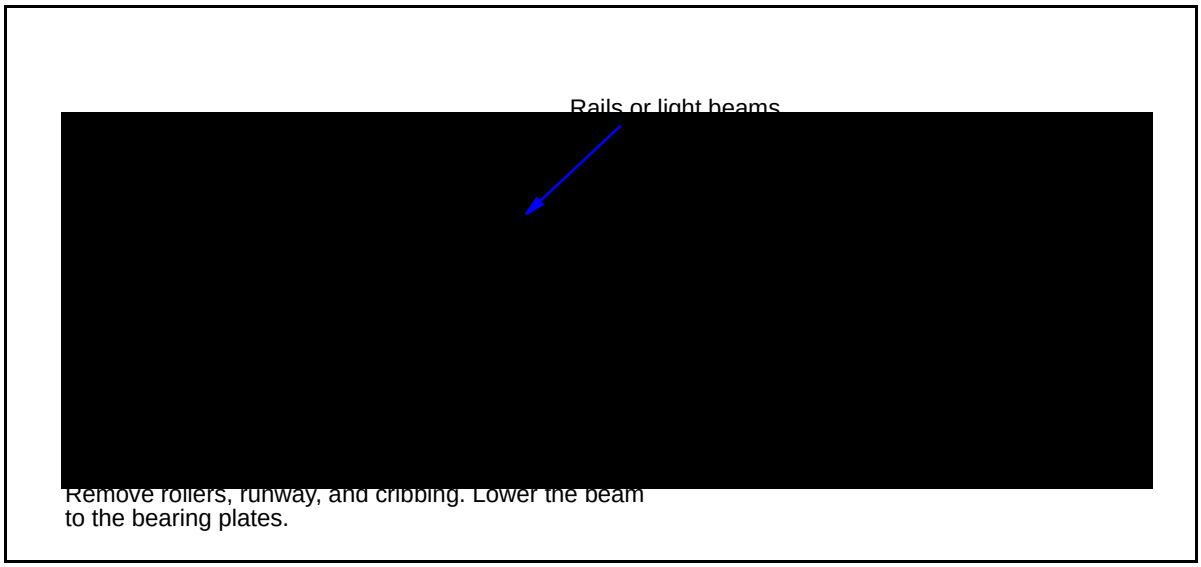

Figure 10-18. Launching Beams by Cribbing

JACKING METHOD

10-70. If two beams are launched together or if one beam or girder is exceptionally heavy, the beam or group of beams can be lowered using a jack. *Figure 10-19* shows this method. With careful management, the beam can successfully be lowered from jack to jack without lowering it onto the cribbing and having to rejack the beam. Keep blocking under the beam at all times, and exercise extreme care when handling to prevent tilting and shifting of the beam. Use hydraulic jacks capable of lifting two to three times the expected load.

PRECAUTIONS

10-71. From observation and field experience, apply the following when erecting bridges using heavy equipment:

- Inspect all the erection tools for serviceability. Ensure that they are of the proper size and that sufficient quantities are on hand before starting construction.
- Inspect all the materials to ensure proper strength and fit. For example, ensure that the sheared ends of the web plates have no burrs

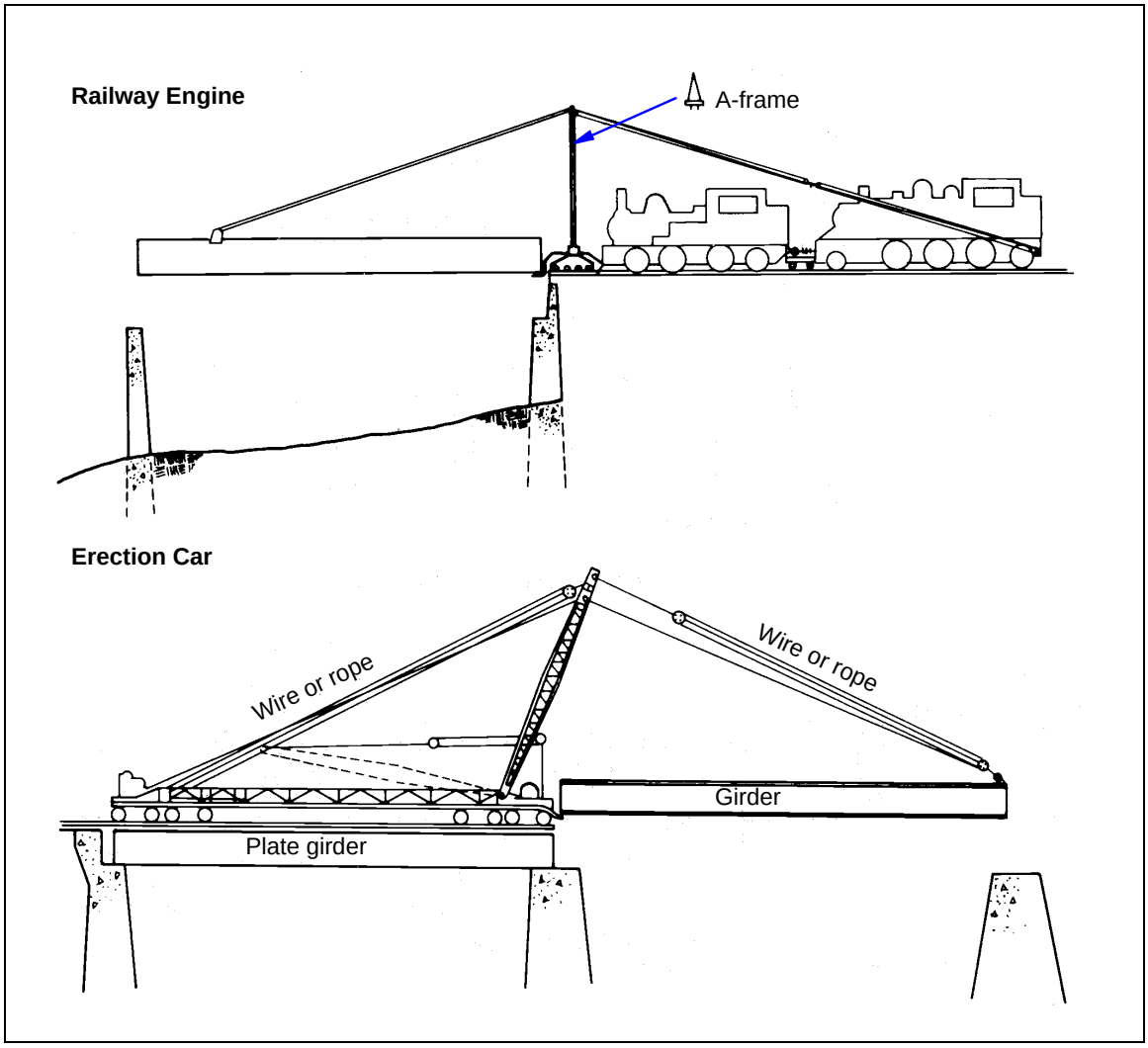

Figure 10-19. Launching Spans With Railway Engine and Erection Car

or obstructions to splicing or that splice-plate bolt holes are completely drilled and free of protective coating material.

- Consider launching long, continuous spans. This is more economical than other methods. Final positions of splices should be at places other than the center of individual spans, if practical.
- Give movable bearing ends careful attention. Parts of beams and bearing plates that are in contact should be smooth, clean, and well lubricated. Position the bearing plates carefully to ensure proper alignment for the temperature ranges expected.
- Exercise care to ensure that the beams are aligned properly and that driftpins pass completely through all parts during splicing operations. This reduces the possibility of having to ream the bolt holes. Insert the bolts through the bottom-flange splice plate with the bolt head down to avoid any interference with the launching rollers. Countersink the bolt and rivet heads into the top flange of the beam. Ensure that the

top and bottom of the beam are oriented properly when launched because countersinks are required on the top flange and not on the bottom flange.

- Install as many of the diaphragms and lateral braces as possible before launching the beams. Do not install diaphragms or lateral braces that may interfere with erection operations; wait until after the beam is launched. This will eliminate some of the work that must be conducted over open spans.
- Place preventer tacks and guy lines (in sufficient quantities to prevent mishaps) before launching.
- Ensure that the electrodes for overhead welding are the all-position type and of the correct polarity.

SUSPENSION-BRIDGE CONSTRUCTION

10-72. The site for a bridge must have sufficient area available for assembling the towers and hangers. Normally, stadia distances provide sufficient accuracy. If using 10-foot panels, the distance between the towers must be divisible by 20. Check the tower sites to ensure that the towers will be perpendicular to the centerline of the bridge. Mark and measure the distances to the deadmen.

ERECT CABLEWAY

10-73. To facilitate suspension-bridge construction, erect a cableway within 100 feet of the bridge site. The cableway will allow equipment and personnel to be moved over the gap so that construction is possible from both banks simultaneously. Once the materials and personnel are across and the main cables are in place, dismantle the cableway and the wire rope that were used as guy lines, if necessary. Refer to *FM 5-125* for more information on installing cableways.

LEVEL SILL AREAS

10-74. After marking the sites for the towers, level the sills. If footings are needed, make the sill area large enough to accommodate the forms. As the sills are being prepared, assemble the towers and fabricate the deadmen. Erect the towers and install the side and back braces.

PLACE MAIN CABLES

10-75. Attach a lead line to the main cable and carry the lead line to the other side of the gap. If the main cables are on reels, place the reels behind the tower and pull the cables over the tower, across the gap, and over the far tower. Temporarily clip the cable ends around the deadmen. Use a ratchet chain hoist to set the cable to the proper sag configuration. When the cable is properly seated, set and tighten the clips.

CONSTRUCT AND INSTALL HANGERS

10-76. Assemble the floor beams, posts, knee braces, and suspenders to form the hangers. After assembling the posts, braces, and beams, wrap the

suspenders around the floor beams and clip them. Notch the floor beam so that the suspender does not have to bend sharply. Measure the effective length of the suspenders, install a thimble, and clip the suspenders onto the main cables. Do not tighten the clips until the stringers are placed. Recheck the effective length after completing the bridge. Use a scaffold when placing the hangers. Place the hangers simultaneously from each end of the bridge.

INSTALL STRINGERS

10-77. When the first hanger is positioned, place and connect the stringers to the sill and the floor beams. Ensure that the suspenders are vertical and then tighten the clips. Repeat the process with the next hanger. Nail cleats to the undersides of the stringers to keep them in place on the floor beams.

INSTALL SWAY BRACING AND FLOOR PLANKS

10-78. If using timber sway bracing, nail it in place before installing the floor planks. Place the bracing diagonally and nail it in place, and then install the floor planks. If using wire bracing, place the frame first, leaving out the planks so that the wires can be installed. Tighten the wires with rack sticks, and install the remaining floor planks to hold the rack sticks in place.

INSTALL SIDE RAILS AND CURBS

10-79. After completing the floor, install the side rails and the toeboards or curbs. Make splices 2 to 3 feet from the side-rail posts. Use splice plates on all splices. Install saw-tooth bracing after installing the side rails and curbs.

RECHECK CABLE CONNECTIONS

10-80. Ensure that all suspenders are vertical and that all cable connections are secure. Test the bridge with light loads before allowing the heavier loads (up to the rated capacity) to cross the bridge.

Chapter 11

Inspection and Maintenance

The extent of a bridge inspection depends on the combat situation and its influence on future plans for the bridge. If military use of the bridge will extend beyond the immediate tactical need or if the bridge is located on a main supply route (MSR), the inspection should be detailed enough to ensure the bridge's continued use. Experienced personnel must provide timely bridge maintenance to prevent the need for extensive repairs, prolong the life of the bridge, and preclude the closing of vital LOC. Such maintenance includes minor, routine repairs. It does not include replacing or reinforcing major superstructure or substructure members. *Chapter 4* describes methods of reinforcing and repairing existing bridges.

INSPECTION

11-1. Bridges to be abandoned or demolished in the immediate future require only a hasty inspection. An inspector must recognize the anticipated loadings, the combat exposure, and other pertinent factors. Bridges are inspected at least monthly and sometimes daily. The frequency of bridge inspections depends on many factors, such as the following:

- Mission.
- Bridge type.
- Traffic discipline.
- Traffic density.
- Bridge condition.
- Stream characteristics.
- Bridge importance.

MISSION

11-2. An inspection team may combine road and bridge inspections. Their mission is to—

- Determine the bridge's classification (if not posted) or to verify a posted classification.
- Determine the rate of deterioration and record the findings.
- Determine the maintenance and repairs required.
- Determine the means of reinforcement if the load-carrying capacity is inadequate.
- Check traffic control and discipline.
- Locate and check possible bypasses.
- Determine sources and availability of local materials.

PERSONNEL

11-3. Engineer reconnaissance officers (with practical knowledge of civilian bridges) should conduct the bridge inspections. The size of the inspection team ranges from one to five persons, depending on the scope of the inspection. A soil-testing expert may be part of the team. Include a civilian bridge expert (if available) for special problems on important bridges. Corps or higher HQ is the approving authority.

EQUIPMENT

11-4. An inspection party should have the equipment listed below. Other useful items that may be included (if qualified operators are available) are a surveyor's level and a soil-testing set.

- Map and compass.
- Camera and film.
- Shovel and pick.
- Tape measure.
- Sketching set.
- Stakes.
- Twine, cord, or rope.
- Knife or saw.
- Sounding rod.
- Pneumatic reconnaissance boat.
- Sign-painting kit.
- Report forms.

REPORTS

11-5. During the early tactical phase, there is seldom time to prepare a written report. Any oral reports should be followed with a written report as soon as possible. Only the most important bridges require an initial written report be prepared. Use *DA Form 1249* to record information (see *FM 5-170*). Include the information discussed in the remainder of this section and sketches, maps, and pictures (essential for clarity) in the report.

11-6. An inspection team should develop a checklist to use when conducting bridge inspections. The checklist should include all the items that are necessary to accomplish the objective of the inspection. If a bridge is determined to be unsafe during an inspection, the team should either lower the posted classification or close the bridge for repairs. The team must report such actions to the responsible engineer staff officer or commander. The inspection team forwards its report through the chain of command for distribution to the responsible unit. The team should also maintain a file copy of the report.

INSPECTION ITEMS

11-7. The items discussed below should be included in the checklist. The list is not in any particular order, but the team should check each item.

Attached or Hidden Demolition Charges

11-8. Check captured bridges for mines, demolition charges, or other evidence of booby traps or sabotage. Abutments, piers, truss chords, suspension cables, and arch crowns are likely locations for hidden explosives. Many foreign bridges have concealed chambers in structural members that may contain demolition charges.

Evident Damage

11-9. Check and record any evident damage. Even minor damage in critical areas can render a bridge unsafe.

Structural Alignment

11-10. Examine all structural parts of a bridge, especially bents, piers, abutments, and trusses. Check for misalignment and excessive settling. Check the expansion joints because they will show signs of a bridge shifting or misaligning. These conditions are likely to occur after hard rains and flooding. Check the vertical alignment of the approach roadway. The approach should match the level of the bridge's deck surface. Ensure that each stringer is carrying its share of the dead load. Check anchors for tautness and performance. Check railroad bridges and trestles for rail and tie misalignment, loose spikes and connections, and tie and ballast shift.

Debris and Debris Jams

11-11. Clear the deck of debris. Ice, mud, and other debris greatly increase impact stresses on all parts of the bridge. Ensure that the deck drains are clear of debris and in operable condition. Remove jammed debris from around the piers or other structural members. Debris around the piers can accumulate rapidly and has the potential to exert sufficient force to topple the bridge (especially in swift currents).

Material

11-12. The material condition should be checked as follows:

- **Timber.** Examine all timber members for rot, splits, decay, insect damage, warp, crushes, breaks, or other damage. The deck should be smooth; rough surfaces increase impact stresses on all parts of the bridge. Replace timber treads when 10 to 15 percent of the original surface has worn.
- **Steel.** Examine steel for excessive corrosion, twist, lateral buckling, metal fatigue, or other damage.
- **Masonry and concrete.** Examine masonry and concrete for excessive cracks, crack progression, bulge, crumble, or erosion. Progressive condition changes are important for estimating the deterioration rate. Some tension cracking in concrete is acceptable, but exposed reinforcing bars indicate poor concrete condition. Worn concrete or masonry surfaces can best be protected by asphaltic concrete.

Deflection

11-13. Check the bridge for span and pier deflection. The elevation of a painted target on the point in question can be calibrated to a special benchmark with a good quality surveyor's level rod. Immediately investigate any change in the bridge's elevation. Deflection of the bridge under capacity loads should be no greater than 1/200 of the span length.

Connections

11-14. Examine all connections (nails, bolts, rivets, clamps, scabs, bracing, and so forth) for signs of looseness, wear, or other defects. Check the bolts and rivets carefully for early signs of shear. Check the lashings and riggings for improper tension and excessive wear. Consider the following:

- **Bracing.** Turnbuckles permit adjustment of diagonal tension rods. Tighten the adjustments so that the tension is uniform in all rods.
- **Joints.** Replace riveted or welded joints that are overstressed in shear. Tighten any loose, structural, ribbed bolts.

Fire Protection

11-15. Ensure that adequate fire-fighting equipment and supplies (fire extinguishers, water pumps, sand, and so forth) are available to the bridge guards. Ensure that the guards have been trained in the proper use of the equipment. Ensure that all dry grass and other combustible debris have been removed or neutralized. Investigate any incidents of floating fuels or conditions that may indicate fuel spills near the bridge.

Night Markers

11-16. Check the reflecting buttons or markers on the bridge. The markers should be adequate in number, firmly attached, clean, and properly located.

Classification

11-17. Ensure that bridges are classified according to *Part Two* of this FM. If signs of structural damage or additional damage not previously identified and considered for classification purposes are present, reclassify the bridge. If the accuracy of the posted classification is questionable, reclassify the bridge.

Bridge Signs and Approaches

11-18. Ensure that bridge and classification signs are present, accurate, clean, and visible. Check the bridge approaches for adequate turnouts.

Erosion

11-19. Check around all the abutments, piers, and anchors for signs of erosion. Examine the soil around these structures for signs of progressing erosion that may later damage or endanger the bridge structure. Floating objects such as ice, logs, and other debris can seriously damage or erode piers and other parts of the structure that are at water level.

Waterway Bottom

11-20. Check the waterway bottom for shifts of sandbars and channel. Monitor the hydraulic effects that wrecks, sunken boats, or other structures have on the bridge.

Detours and Bypasses

11-21. Compile or update information on alternate routes. This information is necessary during emergency conditions.

Snowdrifts

11-22. Indicate where snowdrifts could occur. Develop countermeasures for dealing with them.

Material Sources

11-23. Compile a list or update a previously made list with the location, type, and quantity of locally available materials. This list should include materials that are necessary for repairs.

CORRECTIVE MEASURES

11-24. An inspection-team chief should make recommendations for correcting all of the deficiencies noted during an inspection. The extent of the recommendations will depend on the materials, time, and personnel available and the methods adopted by the engineer staff or commander responsible for the bridge.

MAINTENANCE

11-25. An engineer construction company or battalion will normally be responsible for bridge maintenance, depending on the length of the route or the amount of work to be done. Road and bridge maintenance are usually one mission.

11-26. A maintenance unit is usually a patrol or a gang. A patrol may be an individual or a small group that proceeds along a route to perform a single task (such as nailing down loose flooring). A gang may vary in size from one squad to a company or larger. Gangs are more practical than patrols because they spend more time in a single location, performing several tasks at the same time.

11-27. Organic and special engineer equipment may be augmented from depot stocks, supply points, or other units. Captured equipment, parts, and material should also be considered as possible resources. When speed is essential, stock items are best for efficient maintenance. The responsible commander should determine the best resources and methods for obtaining material.

DECKS

11-28. Decks should be free of stones, mud, ice, and debris to decrease wear on the surface. Keep flat decks clear with a patrol grader, which throws mud,

ice, and debris to the curb where it can be removed by hand shoveling. A scarifier may help remove ice. If patrol grading is impractical, shoveling and hand removal of large debris is necessary.

11-29. A thin tar or asphalt coating densely covered with sand, pea gravel, or stone chips will reduce the danger of fire on wooden decks. Loose sand, chemical fire extinguishers, water pumps for river water, or barrels of water are effective resources for fighting bridge fires.

11-30. Misalignment (caused by simple shifting or structural failure) can be repaired by pulling the deck back into place with wire cable and tractors. Mechanical or hydraulic jacks may be effective. Misalignment of major superstructure members is usually caused by movement of the footings. Since this type of misalignment is difficult to repair, the bridge may have to be reconstructed.

11-31. The principles of fire fighting, shifting, and stringer replacement in highway bridges also apply to railroad bridge decks. Replace burned or damaged ties promptly. Check the rail alignment and guardrails for shifting and correct any problems. The maintenance patrol or gang should also tighten all loose rail spikes, end joints, hook bolts, and tie-spacer connections.

Fastenings

11-32. Wooden decks tend to shift under load. Correct this problem by adding adequate fastenings to the curb rail, tread, or stringers. If the stringers shift, draw them back into position and secure them with drift bolts (for timber stringers) or steel bolts (for steel stringers). Redrive any loose nails or add new nails to loose planks. Driftpins or lag screws might be needed in troublesome spots. Ensure that the clamps for the curbs and handrails are secure.

Timber Treads

11-33. All types of timber-deck bridges should have timber treads. Bolt timber treads onto steel grid floors if the grids show signs of excessive wear. Replace the treads when 10 to 15 percent of the original surface has worn. A tar or an asphalt coating covered with sand, fine gravel, or stone chips will prevent excessive splintering and rapid wear.

Wearing Surfaces

11-34. Asphaltic concrete best protects wearing surfaces of concrete or masonry.

Stringers

11-35. Replace bent, crooked, or rotten stringers by removing and replacing the flooring planks. Correct stringer bearing is essential for the bearing cap and the flooring. Placing metal shims between the stringer and cap is the best way to correct the bearing. Securely fasten shims in place to prevent them from dislodging. Do not use small shims between the flooring and stringers.

Curbs and Handrails

11-36. Replace curbs and handrails only when they have been damaged by accidents.

FOUNDATIONS

11-37. Foundation settlement is usually caused by scour or structural failure. Correct minor settlement by jacking up the structure and inserting steel shims between the stringers and the cap or between the bearing plates and the pedestal. Use hardwood shims under wooden members. Correction of settlement is discussed below. Scour prevention and methods for protecting the foundation and bridge supports from ice and floating debris are discussed in *Chapter 7*.

ABUTMENTS

11-38. Treat scour and settlement of abutments the same as foundation settlement. However, since an abutment also acts as a retaining wall, it is subject to horizontal earth pressures. If the abutment is unstable, shore it or hold it in place with guy lines from anchors on shore (discussed in *Chapter 8).*

TIMBER

11-39. Decay, excessive loads, structural defects, fire, or explosives may cause timber members to fail. Untreated timbers that are alternately wet and dry or are only partly saturated decay quickly. Timber that is under water or otherwise continually wet does not decay, but may be attacked by marine borers. Replace all timber showing decay or structural damage (preferably with masonry or steel) especially if the timber is in contact with the ground. One method of repairing piling is to splice new members to solid members with butt joints and scabs.

11-40. To allow timber to breathe, leave at least a 1/8-inch clearance between the timbers (where possible). Keep all bridge timber clear of debris. Remove the bark from native logs if this was not done during construction. Green or wet timber shrinks considerably when seasoned. Repeated wetting and drying also cause dimension changes as great as 5 to 10 percent, parallel to the grain. Unseasoned timber may require frequent renailing and tightening of bolts.

STEEL

11-41. Intense heat that raises steel temperatures above 1,000°F is particularly serious when the members are under stress. Members under tension that are heated to this extent will permanently elongate and if under compression will buckle. Intense heat will also destroy the temper and extra strength in certain types of steel (especially cold-rolled sections and high-strength wire). Replace damaged steel or reinforce it by welding new members onto the damaged sections.

11-42. Bending (due to accidents or explosions) is not as serious in members that are under tension as it is in those that are under compression. Straighten the bent compression members to their original shape. If not possible, weld or bolt steel plates or shapes onto the bent member to increase its stiffness.

When essential members are severed, other members assume added stresses. Relieve overstressing of members by adding bolted or welded plates or structural sections across the gap.

11-43. Military loads and design stresses are high, with impact adding to the severity of steel stresses. Fatigue failure is caused by repeated stressing and may result in sudden collapse. Fatigue failure is usually preceded by small hairline cracks around the rivet holes, welds, and other surface irregularities. Since these cracks usually do not get large before ultimate failure, reinforce the affected components immediately with steel plates.

11-44. Rusting on bridges seldom requires special attention unless these structures are subject to salt spray or are located in humid climates. Keep all steel clear of debris, and limit timber-steel contact to a minimum to prevent rusting due to moisture retention. Loose rust is not serious, but deep pitting should be investigated. Paint areas that are subject to severe rusting and coat them with tar, asphalt, or thick grease. Remove all rust with a wire brush or by sandblasting before painting.

CONCRETE

11-45. Correct surface spalling on concrete with plaster or with a low-water-content mortar applied with a pneumatic sprayer. Extensive frost damage is usually not repairable. Rust flakes on reinforcing steel can exert considerable pressure when confined and will spall concrete along bars that are too close to the surface. Although seldom serious, repair this condition by chipping away the concrete, cleaning most of the rust from the bar, and grouting the area. Fires of 1,200°F and above that last for an hour or more cause spalling and cracks and reduce the strength. Replace the concrete if the damage is serious. Patch all holes and gaps that are caused by accidents or explosions.

Tension

11-46. Concrete tensile strength is negligible since resistance to tension is furnished by the reinforcing steel. Tension cracks crossed at right angles by reinforcing steel are not serious unless they are more than 1/8 to 1/4 inch wide, depending on the structural details. The repair of this condition is discussed in *Chapter 4*.

Compression

11-47. Compression creates a crushing failure that crumbles concrete, especially in columns. The repair of this condition is discussed in *Chapter 4*.

Shear

11-48. Repair concrete shear failure in rectangular members with tight steel bands. Do this only under the supervision of a structural engineer.

APPROACHES

11-49. Correct any settlement of approaches immediately. The grade line of unpaved approaches should be 1 inch above the grade of the deck. The grade line of paved approaches should be the same grade as the deck. Patch any

potholes immediately. When settlement occurs on railroad bridges, add ballast to the track (shorewards of the abutment) to keep the track from dipping.

11-50. Some waterways with flat grades and floodplains have a tendency to shift channel locations. Such shifts may deposit eroded material against the piers or erode the pier foundations or approaches. These problems can be controlled by earth or rock dikes or by piles strung with brush mats woven into wire cables.

Chapter 12

Bridging in Arctic and Subarctic Environments

Subsurface exploration and structural design are very important when building structures on permafrost. Successful military construction on permafrost depends on how the permafrost is used as part of the construction. Surface transportation is totally undependable during spring breakup and fall freeze. The change of seasons in arctic and subarctic environments creates problems that are not common in more temperate climates. Extreme cold primarily affects bridge foundations and substructures.

PERMAFROST

12-1. Permafrost describes permanently frozen ground at variable depths below the surface. It underlies about one-fifth of the land area of the world *(Figure 12-1)*. Permafrost may exist as a continuous material or as an island or lens within unfrozen material. The deepest layers of permafrost are in the polar regions and may extend as deeply as 1,300 feet. In arctic and subarctic regions, it is the most troublesome condition encountered when constructing foundations.

Figure 12-1. Permafrost Regions (Northern Hemisphere)

12-2. Permafrost can be used effectively as a foundation for construction. However, improper construction methods may allow undue amounts of heat to transfer into the permafrost, thereby thawing and weakening its supporting properties. Nonfrost active gravel and sand are effective for controlling ground swell and ice formations in fills and bases. Use of these materials allows potentially dangerous groundwater to break through the surface and freeze, where its cyclical freezing and thawing will do no harm.

TRANSPORTATION

12-3. In areas of extreme cold, transportation is best completed during the extreme cold season. Some considerations are discussed below.

SUMMER CONDITIONS (EARLY JULY TO EARLY AUGUST)

12-4. Difficulties during the summer months are due to the lack of soil bearing capacity from inadequate underground drainage. Permafrost prevents the groundwater from percolating to levels that allow surface soil to dry readily. Transportation is limited to tracked vehicles operating on established roads and railroad beds. The surface soil does not dry until late summer, and even then, drying may be only superficial. Much of the drainage pattern of arctic terrain resembles swamps, shallow lakes, and slow-flowing watercourses.

FALL-FREEZE CONDITIONS (LATE AUGUST TO EARLY SEPTEMBER)

12-5. The ability of roads to carry traffic during a freeze-up depends on the condition of the roads' surfaces before they freeze. Hard-surface roads are generally only affected by icing on the surface. Where no hard surface exists (as is characteristic of roads in these regions), the most important factor is whether the road surface has been regularly maintained. Heavy snowfall immediately following a fall freeze may fill the ruts and level the roads' surfaces. If the early winter has little snowfall, deep, frozen ruts will be more prominent.

WINTER CONDITIONS (LATE SEPTEMBER TO EARLY APRIL)

12-6. Surface transportation conditions during the winter are better than at any other time of the year in arctic and subarctic regions. Continuous, extremely low temperatures freeze the surfaces of seas, lakes, rivers, streams, swamps, and tundra, which allows vehicles to breach these obstacles without bridging assets. However, the same low temperatures make equipment operation and maintenance difficult.

SPRING-BREAKUP CONDITIONS (LATE APRIL TO LATE JUNE)

12-7. As winter snows melt, the active soil layer becomes completely saturated. Temperatures are warm enough to begin thawing and breaking up the snow and ice on which skis or sleigh runners have been operating. Surface soil does not dry in the spring.

THAW EFFECTS

12-8. Warm winds, as well as heat from the sun, have a deteriorating effect on a snow mass. Within a few days, the warmed surface loses much of its bearing capacity. Tracks and sled runners cut deeply into the ground surface and make ruts in which water accumulates and further destroys the ground's bearing capacity.

SUBGRADE

12-9. The penetration of meltwater through the snowpack into the surface eventually carries heat into the subgrade. This deterioration may be further aggravated by rainfall. During the initial period, night frosts will temporarily improve the surface. To avert complete destruction of roads, traffic is usually restricted to night travel with light loads.

GROUNDWATER

12-10. Groundwater in the surrounding areas cannot percolate below the permafrost. The groundwater either remains in place to form surface mud and water or runs off the slopes and across roadways, filling the ditches. This action greatly reduces the repose of the terrain and results in landslides. Melting snow often results in snowslides. The rapid runoff may result in devastating flash floods. These situations may delay or suspend bridging operations.

EXPLOSIVES

12-11. Engineers use a great quantity of explosives in areas of extreme cold, because many jobs that would normally be done by machinery in warmer climates are accomplished with explosives. The cold affects the operation of explosive components differently.

MILITARY EXPLOSIVES

12-12. Military explosives are generally unaffected by intense cold. However, they become less sensitive to shock, are somewhat difficult to detonate, and are not as powerful when exposed to extremely cold environments.

COMMERCIAL EXPLOSIVES

12-13. Commercial explosives become less sensitive until they freeze, after which time they become extremely dangerous. Commercial dynamite is currently manufactured with freezing depressants to lower the temperature range at which its sensitivity and reliability are affected. Black powder has no moisture and, therefore, cannot freeze, but it is extremely dangerous to use. See *FM 5-250* and *TM 5-852-1* for additional information on explosives.

EXPLOSIVE ACCESSORIES

12-14. Explosive accessories (such as blasting caps and machines) are hardly affected by the cold except for being slightly sluggish. However, standard silver-chloride, dry-cell galvanometers are impractical. Tactical firing devices are adversely affected.

STEEL

12-15. Extreme cold makes steel brittle. The most important consideration is impact loading. The properties of chromium-nickel types of stainless steel are actually improved by extreme cold.

WOOD

12-16. The strength of wood is relatively unaffected by extreme cold. However, the impact strength of wood is reduced considerably because the wood's moisture content is reduced by the environment. Wood normally contains between 10 and 20 percent moisture. This moisture content may drop to nearly 1 percent in extreme cold because of the relationship between relative and absolute humidity. Reduced moisture content causes shrinkage, and the nail-holding property of wood is greatly reduced. Nails also tend to split the wood more easily.

CONCRETE

12-17. Concrete is not adversely affected by extreme cold, provided it does not freeze before the curing process is complete. The problems of protecting fresh and uncured concrete from freezing are exactly the same as in cold portions of the US except for the amount of heat that must be provided. See *TM 5-852-1* and *FM 5-428* for information on cold-weather concrete placement. It is not practical to place concrete during weather colder than 0°F.

ENGINEER EQUIPMENT

12-18. Most construction equipment can be adapted for use in arctic and subarctic conditions. The equipment will not be as effective, and the operator must be aware of the limitations of the equipment when used in extremely cold environments. The efficiency of the equipment depends on the knowledge and skills of the operator and the maintenance technician.

CONSTRUCTION SCHEDULES

12-19. Schedules may be hampered by weather. Using proper precautions will allow a construction crew to still achieve a relatively high progress rate.

BRIDGE FOUNDATIONS AND SUBSTRUCTURES

12-20. The best locations for bridges in extremely cold environments are areas where the water is deep, the channel is narrow, and the banks are high. Some of the more pertinent effects and remedial measures for building foundations and substructures are discussed below.

ARCTIC PRECIPITATION

12-21. Precipitation over most of the arctic is about 8 to 10 inches per year, but it varies widely depending on geographic location. Snow and ice fogs are the prevalent form of precipitation. Although usually very light, precipitation reduces lowland prairies to swamps except where the soil is rocky. Generally,

rocky areas have a slow evaporation rate and little or no underground drainage.

SUBARCTIC PRECIPITATION

12-22. Precipitation in the subarctic is much heavier than in the arctic. Some coastal areas receive as much as 150 inches of precipitation per year. Most of this moisture occurs as rain during the period from March through November. This rainfall supports a lush growth of trees and other plants. Interior regions receive an amount of precipitation comparable to that of the Midwestern US, with most of that falling in late summer.

STREAMS AND RIVERS

12-23. The flow rates of streams and rivers in extremely cold environments vary widely. The daily water crests are more pronounced in the warmer regions than those in the colder regions. The crests in the warmer regions may vary as much as 7 to 10 feet daily. Seasonal variations in arctic and subarctic regions are numerous. Flash floods are common during spring breakup, and the waterways carry great quantities of ice. The water level is generally low during the fall, and streams fed by snowmelt may cease to flow entirely *(Figure 12-2)*. During the winter, some streams quit flowing and freeze to the bottom. Wide floodplains with indeterminate and meandering channels are common.

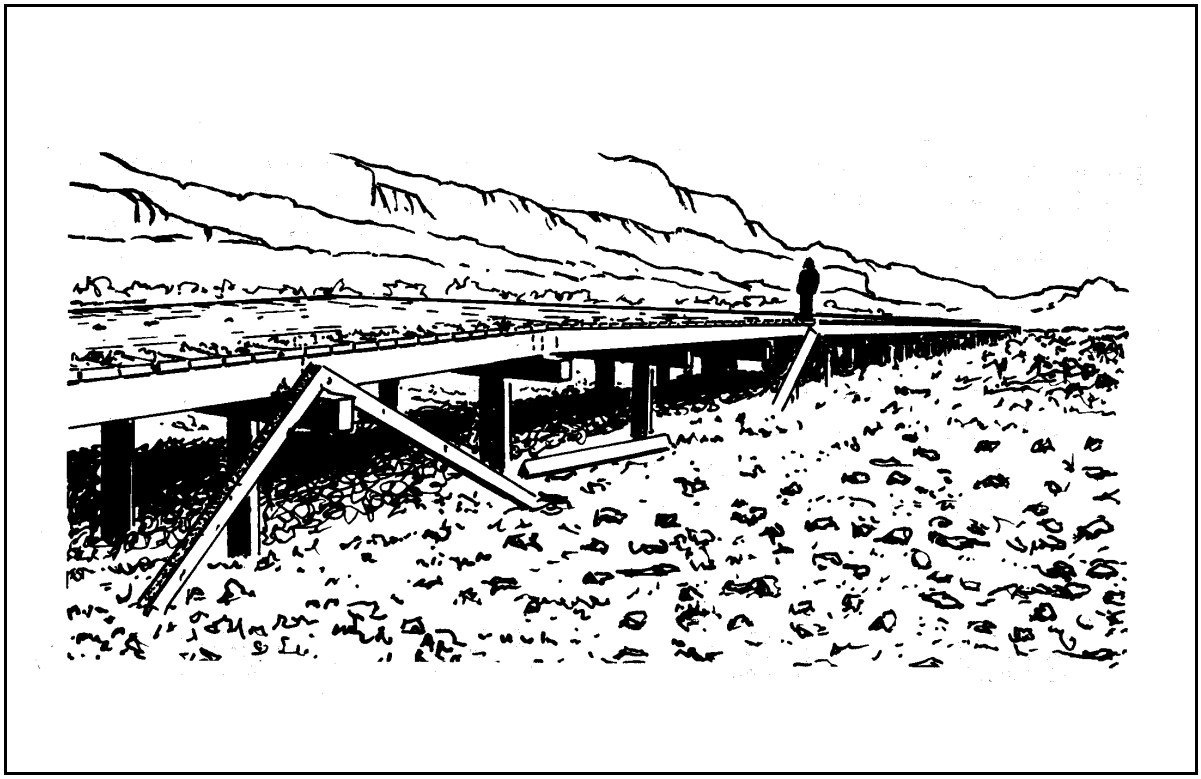

Figure 12-2. Dried Streambed

ICE FREEZE-UP

12-24. Ice and slush form during a fall freeze and act abrasively on bridge substructures. Ice also forms and clings to substructures, building sufficient weight to obstruct the water flow. When the water recedes, a bridge may collapse. Ice also adheres to other ice on the water surface. This condition (called *valley icing)* is most common in water with permafrost under their channels.

ICE BREAKUP

12-25. During the spring, large sheets and blocks of ice float downstream, exerting tremendous pressures against bridge substructures. Final bridge failures from ice accumulation usually occur during ice breakup.

NATIVE MATERIALS

12-26. Local bridge construction materials are abundant in some regions and nonexistent in others. The temperature, the precipitation, the amount of sunlight, and the geologic history all affect the availability of natural materials in a local area. Accumulated snowfall is the biggest deterrent to finding sufficient local resources.

TIMBER

12-27. In some subarctic regions, timber is so bountiful that it hampers military operations and construction. Timber is usually available within a range of 50 to 100 miles. In other areas (particularly the arctic), timber is nonexistent. Deciduous trees are present near the timber line and coniferous trees are common in northern parts of the subarctic region. Timber is a viable construction material for arctic construction if allowances are made in the structural design for seasonal changes.

ROCK

12-28. A wide variety of rock outcrops exists in the arctic. Rock composition ranges from hard, Precambrian to Canadian shield to soft, sedimentary rock. Rock outcroppings in the arctic and subarctic regions represent all hardnesses and textures created by geological processes. In flat-frosted and tundra regions, rock outcrops are scarce. The frequency of outcrops increases in hilly and mountainous regions. Above the 75th parallel in the Canadian Archipelago, rock outcrops are common and are often badly fractured.

SAND AND GRAVEL

12-29. Subsurface deposits of sand and gravel are present in arctic and subarctic regions. Glacial action has produced many deposits of these materials, especially in riverbeds and deltas. Sand and gravel may also be obtained from the seacoasts and lake shores, backwaters, and meandering river channels. The quality of inland and shoreline deposits is not as high as those of glacial deposits, because glacial deposits are often a matrix of silt and vegetable matter, thus having better construction characteristics.

SNOW AND ICE

12-30. Snow and ice are useful construction materials. Additional information on using ice as a construction material is discussed later in this chapter.

FOUNDATION SURVEY

12-31. The existence and arrangement of permafrost under river channels depend on many factors. Always conduct a permafrost survey at a bridge site before beginning construction. The extent of the survey depends on the size, importance, and expected durability of the proposed bridge. Base the design of the bridge on criteria applicable to the active layer (the area where cyclical thawing and freezing occur) in its thawed condition. Core sampling (boreholes) provides an engineer with a profile of the river and the bridge approaches. Extend a cross section, 15 to 20 feet below the proposed foundation base unless bedrock is encountered at a shallower depth. Determine the characteristics of any bedrock by using a test-hole penetration of at least 5 feet *(Figure 12-3)*. All surveys should show—

- A profile of the riverbed.
- The permafrost table.
- The active-layer depth and its relationship to the permafrost table.
- The subchannel drainage.
- The geological structure of the site.
- The site's soil composition and texture.

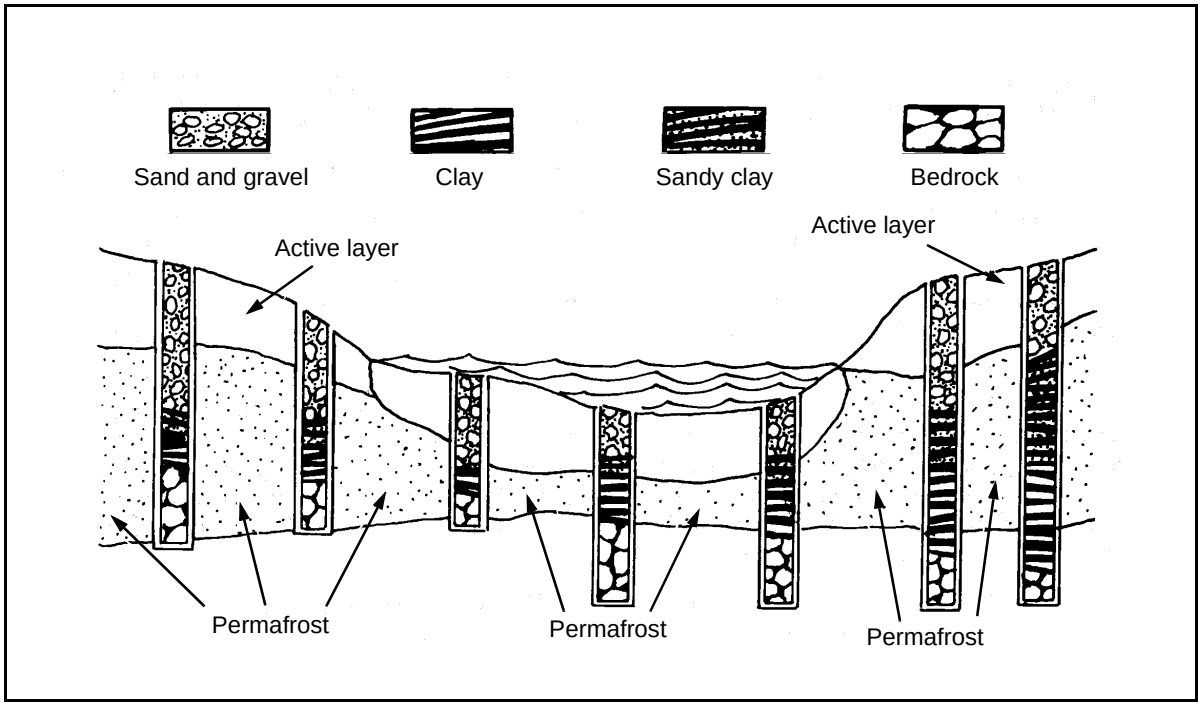

Figure 12-3. Borehole Exploration of a Bridge Site

INTERMEDIATE SUPPORTS

TRESTLE BENTS

12-32. Trestle bents are unsatisfactory as intermediate supports for any but temporary bridges because their footings rest on the very unstable active layer. They are impractical because they have too many supports that are susceptible to attack by ice and too many obstructions that block water flow and ice passage. When placed across shallow, still water, trestles are susceptible to variable upward thrusts that may wreck a bridge.

PILE BENTS

12-33. Pile bents are the most suitable bridge foundations in extremely cold environments because they can be driven down to stable soil. Treated timber; precast, reinforced concrete; steel piling; and steel pipe are satisfactory pile materials. Precast, concrete piling is excellent because there is less ground thawing after placement than with other pile materials. Generally, reinforced concrete and steel piles should be uniform in cross section along their entire length. The heat conductivity of steel helps to thaw ice accumulation on the member. The considerations discussed below may affect the use of pile bents.

Bearing and Upthrust

12-34. Since the bearing capacity of frozen ground is high, piles placed in permafrost will support tremendous loads. *Figure 12-4* shows the adverse action of settlement and upthrust on piles or other foundations based on permafrost. *Figure 12-5* shows the action of a pile that is properly extended into permafrost. Generally, extend piles into permafrost to a depth at least twice the thickness of the active layer. To minimize upthrust, place timber piles butt down.

Pile Driving

12-35. Permafrost prohibits the use of normal pile-driving techniques. The piles have to be placed in drilled or thawed holes. Drill the holes with directional explosive charges. Accomplish thawing with a water or steam pipe, advanced downward as the ground thaws. Drive the pile in the normal manner.

Pile Spacing

12-36. Because of severe structure wear on any component exposed to floating ice and the danger of collapse from ice accumulation, place as few piles in the actual waterway as possible. This will require longer spans and extensive protection for intermediate supports. Greater spacing requirements favor steel as a pile material.

Protection

12-37. Pile fenders, sheathing, and modified construction help to protect against ice damage. Drive fenders in a diamond pattern, upstream from the piles they protect. Sheathe the piles to provide a smooth surface and to prevent ice from snagging and damming up in front of the piles. Omitting the diagonal bracing below the waterline or ice line will allow ice to pass the piles more freely.

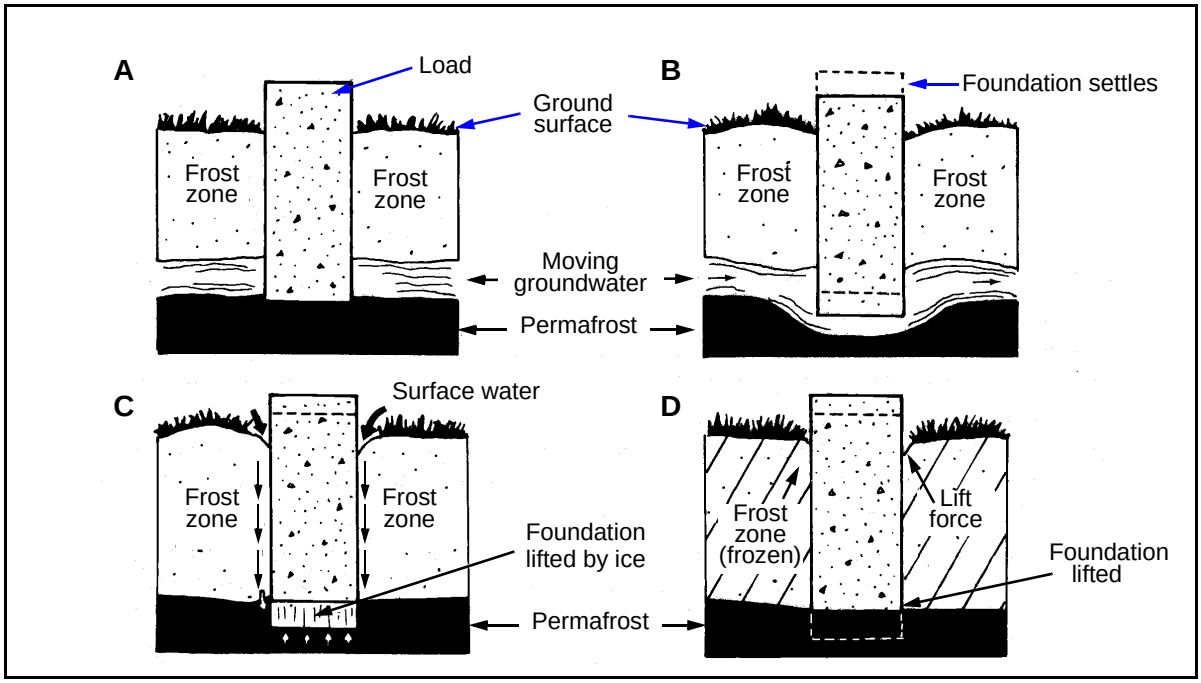

Figure 12-4. Effects of Settlement and Upthrust

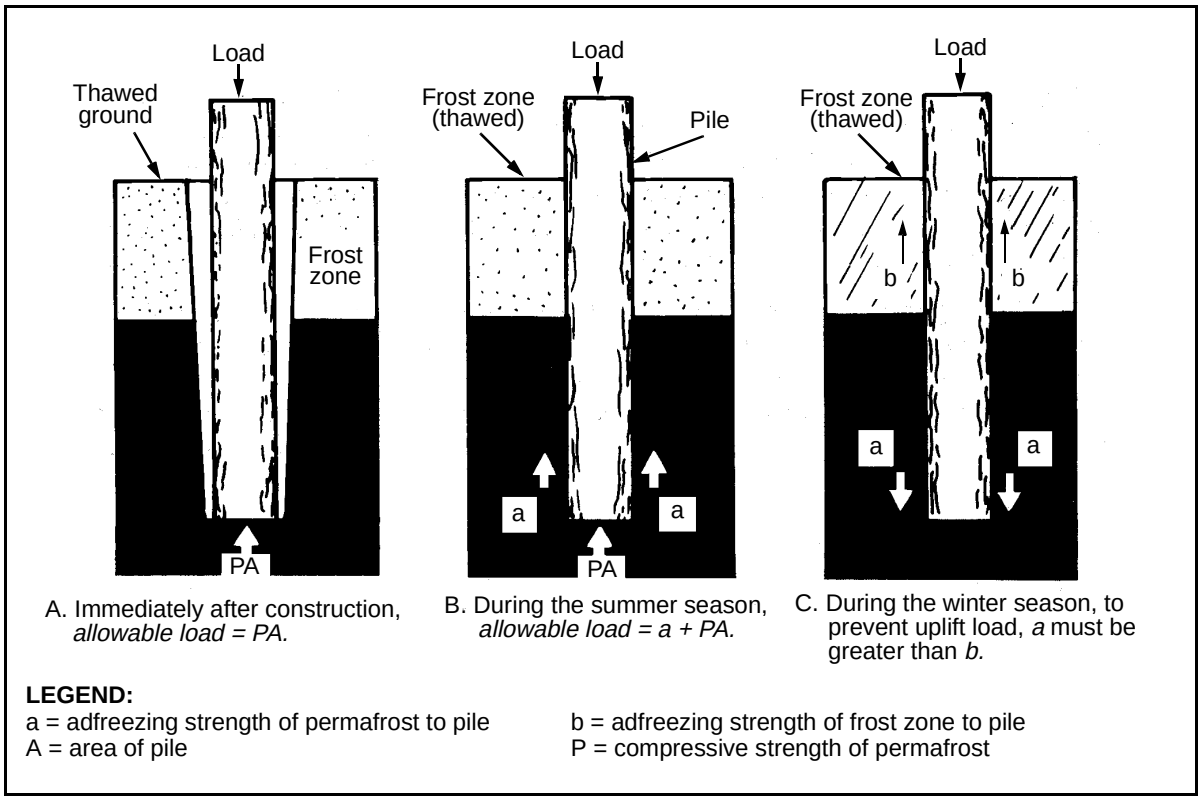

A. Immediately after construction, *allowable load = PA.*

B. During the summer season, *allowable load = a + PA.*

C. During the winter season, to prevent uplift load, *a* must be greater than *b.*

LEGEND:

a = adfreezing strength of permafrost to pile
A = area of pile
b = adfreezing strength of frost zone to pile
P = compressive strength of permafrost

Figure 12-5. Pile Installation in Permafrost

PIERS

12-38. Construct piers on top of pile foundations. Cap the piles with concrete, timber, or steel superstructures. Bailey-type panels are also satisfactory for pier construction. Solid concrete piers usually require no protection.

ROCK CRIBS

12-39. Avoid using rock-filled cribs as piers for midstream supports unless they are supported by rock foundations near the water surface. Rock cribs are subject to heaving and induce icing. Use rock cribs as intermediate supports only for temporary bridges.

REPLACEMENT SUPPORTS

12-40. Foundation instability and normal wear and tear of intermediate supports in extremely cold environments may require planned replacement of piers after each spring breakup. Make every attempt to salvage superstructures before breakup occurs. Periodically replacing damaged piers and supports makes total bridge failure less likely.

ABUTMENTS

SOIL

12-41. The soil condition, the active-layer depth, the permafrost table, and the bridge type will determine the type of abutment required. If the soil's condition shows that heaving and settling are unlikely, follow normal abutment construction techniques. Special abutments are necessary when a bridge site has poor soil conditions, permafrost, or an active-layer depth of 6 feet or more.

FOUNDATIONS

12-42. Piles provide satisfactory abutment foundations because they can be rapidly placed and they eliminate the need for excavation. If the permafrost table is depressed sufficiently so that the piles will not reach the permafrost, use temperate-zone practices for abutment foundations.

CONCRETE

12-43. The use of concrete abutments is limited by the construction season and their effect on the thermal regime. *Figure 12-6* shows how threat engineers have modified abutments to compensate for arctic construction. If the permafrost is so deep that placing a foundation is not feasible or if the permafrost is expected to thaw, use construction practices applicable to the site in its unfrozen state.

Excavated Foundation

12-44. Apply the insulation principle to foundations when the abutment is to be frozen into the permafrost. Use the following procedure:

Step 1. Excavate the area for the foundation to a depth of at least 3 feet below the permafrost table in coarse-grained sands and gravels and at least 5 feet below the permafrost table in fine-grained sand, silt, and clay soils.

Step 2. Level the bottom of the excavation with a 4- to 10-inch layer of moist sand. Place a wooden or precast-concrete slab over the sand. This platform reduces permafrost thawing due to the heat generated from concrete setting and prevents the concrete from mixing with ground materials.

Step 3. Place the abutment. If the abutment foundation is wider at the bottom than at the top, make the taper from bottom to top smooth with no steps in the active layer. After the concrete sets, fill the space between the abutment and the excavation sides to the top of the permafrost table with wet sand. This layer of wet sand will freeze and anchor the abutment in the permafrost layer.

Step 4. Make sure that the abutment has a smooth surface to prevent the backfill from freezing to the foundation. Backfill the abutment portion in the active layer with coarse gravel.

Step 5. Plant shrubs or other protective vegetation around the portion of the abutment exposed to the sunlight to reduce solar-heat absorption.

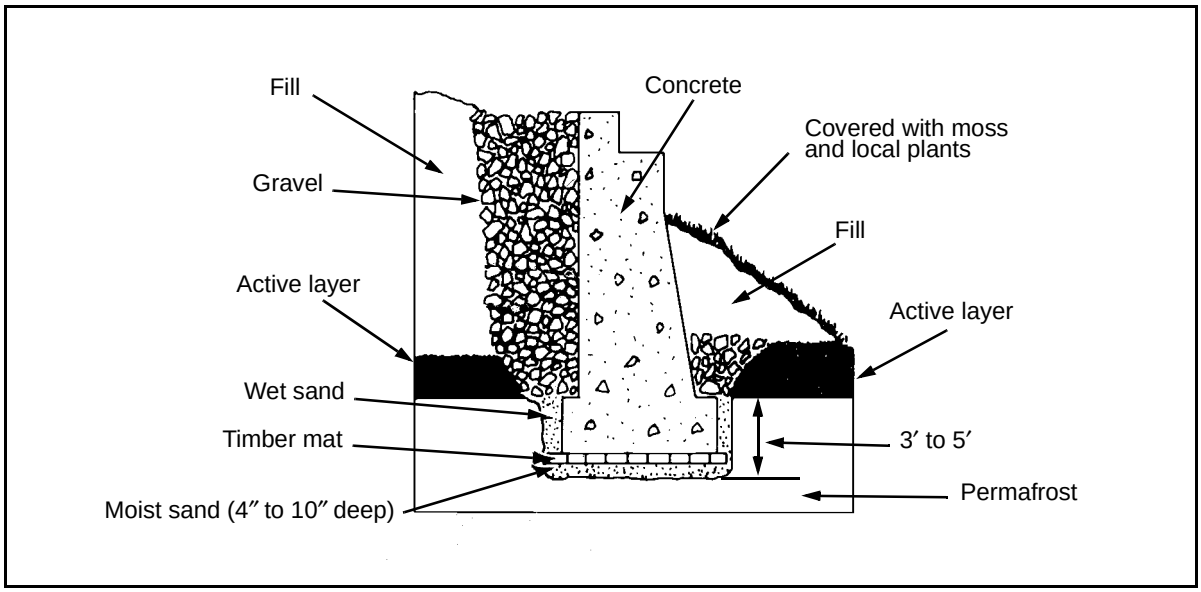

Figure 12-6. Abutment Installation in Permafrost

Nonexcavated Foundation

12-45. If it is impractical to excavate the permafrost, use the procedure shown in *Figure 12-7, page 12-12*. This method requires excavating to the permafrost table. Drive the piles into the permafrost as described earlier in this chapter, leaving at least 18 inches of each pile exposed above the permafrost table. Place a layer of wet sand around the piles to a depth equal to one-third of the exposed height of the exposed piles. Doing this prevents the heat that is

generated by concrete setting from thawing the permafrost. Pour the abutment, covering the remaining portion of the piles with concrete.

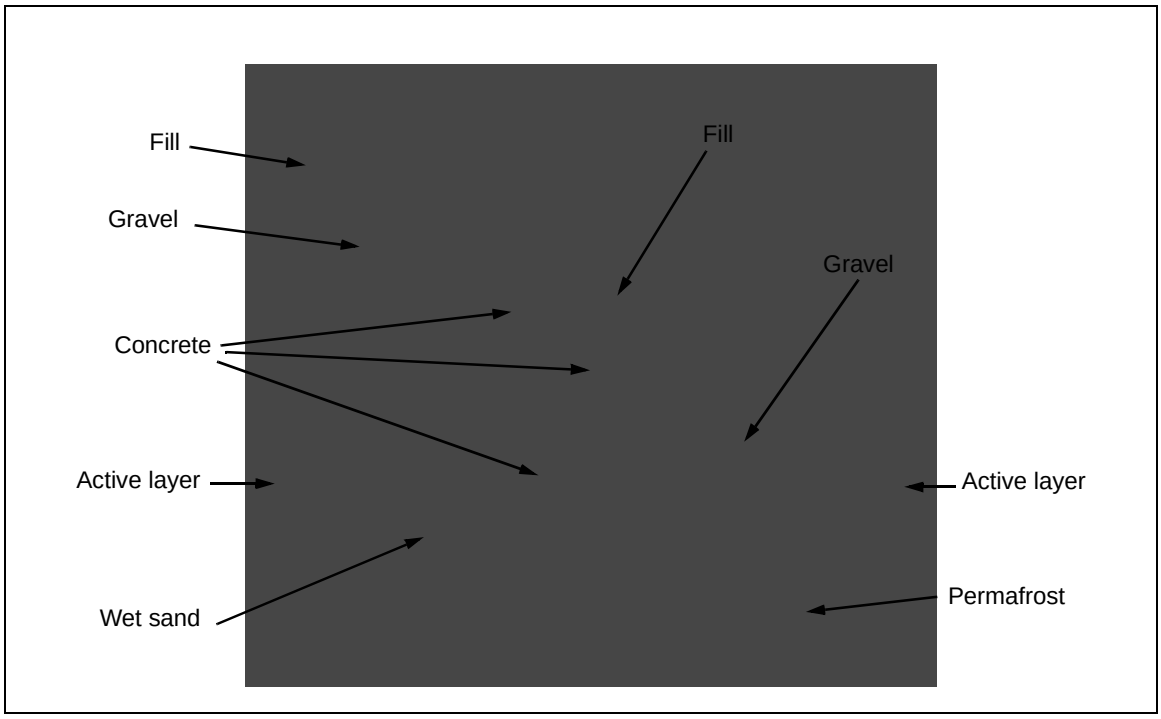

Figure 12-7. Abutment Installation on Permafrost

RETAINING WALLS

12-46. When constructing retaining walls, backfill them with coarse material to ensure good drainage. This reduces the normal groundwater level and the possibility of icing around the wall. Finish all retaining walls as smoothly as possible to prevent ice accumulation.

ICE REMOVAL

12-47. Ice will accumulate against bridge supports and cause serious damage if left unchecked. It may be necessary to remove ice accumulation from bridges and drainage structures at regular intervals. See previous discussion in this chapter on using explosives.

CHOPPING

12-48. Chopping is an expedient method of removing ice buildup from a bridge. Chopping is inconvenient as it needs to be periodically repeated. Do not depend on this method as a permanent solution to icing problems.

THAWING (CHEMICALS)

12-49. Spreading sodium chloride (common salt) or calcium chloride on the accumulated ice will break down the ice. The ice should then drop off the bridge and continue downstream.

THAWING (HEATING WATER)

12-50. Channeling and heating the water flowing under a bridge will thaw the ice that is threatening to block the water flow. Heat the water above the bridge opening with steam pipes laid above or through the bridge opening. An expedient method of heating water is to use steel drums filled with fire. Cut one end off the drums, weight them with rocks, and place them upstream from the bridge. Burn oil, wood, or another suitable fuel in the drums to provide the heat. Intermittent fires should provide enough heat to keep the bridge opening clear of excessive ice accumulation.

THAWING (MODIFYING A WATER CHANNEL)

12-51. Deepening and straightening a channel will allow free flow of deep water under a bridge. The deeper the water, the less chance there is for serious bridge icing to occur.

DRAINING EXCESS WATER

12-52. Use drainage ditches and low barriers to drain any excess surface water away from a bridge site. Drainage ditches require continual maintenance to ensure their effectiveness. Low barriers are effective as a temporary control and require repeated installation. Both methods are only effective for small volumes of water.

INSULATING BRIDGE COMPONENTS

12-53. Insulating potential icing areas to prevent ice accumulation is often effective at bridge sites. The insulation retards ice formation and allows the water to flow freely throughout the winter.

Artificial Canopies

12-54. Light timber canopies covered with moss or boughs (built across the stream channel and against each side of the bridge) can retard ice formation on a bridge's substructure. Build these canopies before the first frost sets in. Ensure that they extend 20 to 100 yards upstream and 20 to 50 yards downstream. Winter snow cover on the canopies serves as an insulating layer, keeping the water flowing under the bridge and preventing ice from forming on the canopies. Remove canopies before the spring breakup to prevent damming and potential bridge damage.

Ice Canopies

12-55. Another method of insulating is to allow a canopy of ice to form above the normal water level. Dam the stream below the bridge site and allow the water to raise and form a 6-inch ice sheet. After the desired thickness of ice accumulates, remove the dam and allow the water to return to its normal

level. There will now be an air gap between the underside of the ice and the water level, acting as an insulator to keep the water from freezing. Allow snow to accumulate on top of the ice canopy to enhance its insulating abilities. Snow fences may be needed so that the snow will drift onto the ice canopy or so that the snow will not blow away. Mark the ice canopies to prevent them from being damaged by attempted crossings.

SUPERSTRUCTURE PRINCIPLES

12-56. Extremely cold conditions generally dictate long, clear spans. Locate superstructures high enough above the high-water mark to prevent them from being damaged or forming obstructions to high water or ice accumulations that may build above the normal high-water mark. Do not design bracing that extends below the waterline or is in the path of water or ice.

PANEL-TRUSS BRIDGES

12-57. Panel-type truss bridges (such as the Bailey bridge) are the best bridges for arctic applications. The main advantage is the availability of standard military truss sections. Use steel trusses whenever possible.

TIMBER-TRUSS BRIDGES

12-58. Timber-truss bridges are the most satisfactory timber bridges for arctic use. Erecting them does not require much more time than that required for trestle- or pile-bent bridges. Use available timber if it is suitable for constructing trusses.

STEEL-TRUSS BRIDGES

12-59. Simple steel trusses made of standard, rolled shapes are very practical if the steel is available. Rolled sections are especially valuable for short-span bridge construction. Use plate girders for longer spans. Girders require substantial piers and abutments. Arch, suspension, and cantilever bridges meet arctic bridge requirements (long spans and clear waterways). However, their use is generally limited to permanent, peacetime construction. Simple pony trusses or A-frame structures are adequate for small bridges.

FORDS

12-60. Fording operations in arctic and subarctic environments are generally more difficult than in temperate areas. The techniques are similar, but there are seasonal considerations. Extremely low temperatures and ice obstacles, especially during spring breakup and fall freeze-up, limit fording operations. Stream velocity and depth change with the seasons and the time of day.

SUMMER

12-61. During summer, a stream's depth and velocity may rise due to glacier or ice-cap melt. Fording of streams and rivers fed by glaciers and ice caps is feasible only when the volume and velocity of water are at their minimum.

Permafrost on stream banks and riverbanks may make approaches difficult to develop and use. For example, ramps may be necessary because approaches may not be able to be cut to the proper grade *(Figure 12-8)*. Make provisions to limit the use of the ford during unfavorable times and to provide assistance (vehicle recovery, drying facilities, and so forth) when difficulties arise during actual crossings of equipment and personnel.

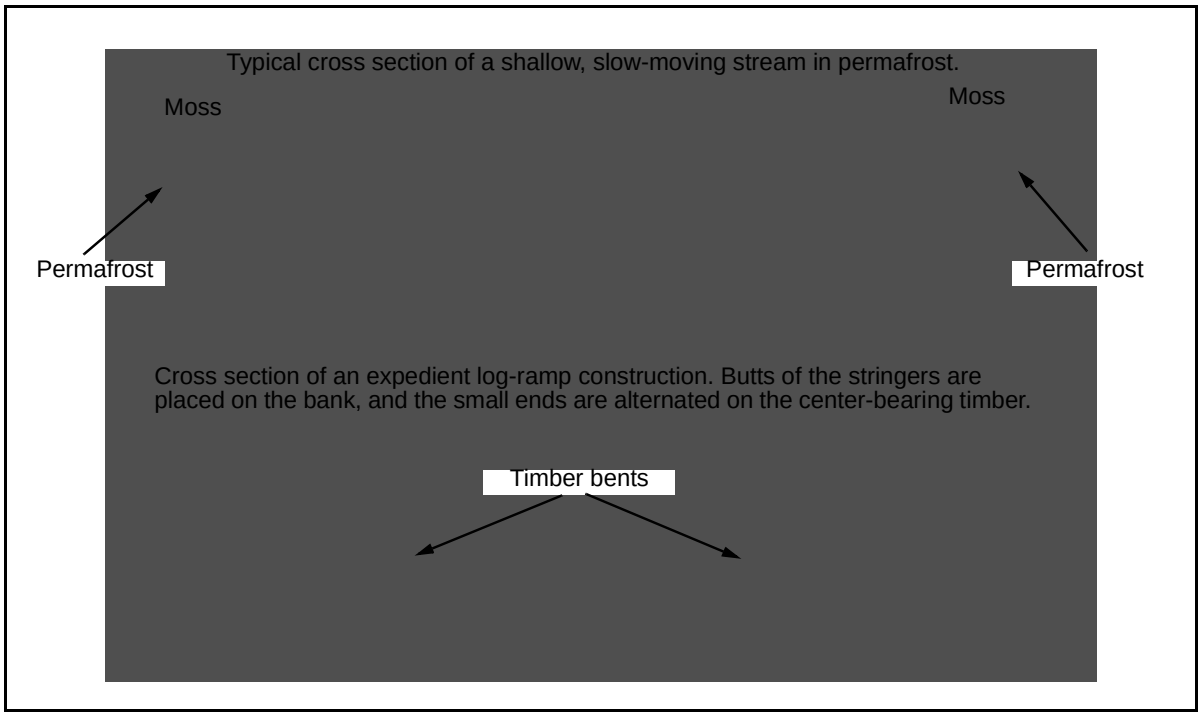

Figure 12-8. Expedient Ramps

WINTER

12-62. Fording during the winter is impractical because ambient air temperatures are damaging to the equipment. Some watercourses (particularly those flowing in broad floodplains) have open channels that continually shift. As the stream direction shifts under the ice, many portions of the ice are left unsupported, creating valley ice. Valley ice makes fording very treacherous. Equipment that breaks through valley ice is difficult to recover. If fording operations are necessary during winter, mark the route, remove all valley ice, and ensure that the fording is through the active stream channels. Maintain continual reconnaissance upstream to determine probable shifts in the water channels. Channels may have to be dammed or diverted to complete a proper fording operation.

12-63. Keep the entire ford area clear of ice to a point below the actual ford area. Vehicles should be operated by experienced drivers only. Drivers should use the lowest gear necessary, maintain a constant speed, and avoid using the brakes (they will freeze closed). After each fording operation, warm and dry the wheels, rollers, engine, brakes, and clutch in a heated shelter, if possible. The alternative is to keep the vehicle moving quickly.

ICE CROSSINGS

12-64. Rivers with low velocities, lakes, and deep swamps will freeze sufficiently to allow ice crossings in winter and well into spring. Develop approaches and reinforce and maintain crossings as discussed below.

DEVELOPING APPROACHES

12-65. Ice along the shoreline is usually thin and weak. Provide a smooth approach from the shoreline to the thicker ice that is capable of supporting traffic. A timber ramp, with the shore end resting in a prepared cut or on a fill and the ice end supported on a timber mat, makes a very satisfactory approach *(Figure 12-9)*. When the banks are high and the obstacle is not excessively wide, a well-compacted and well-frozen fill of snow and brush will provide an effective approach.

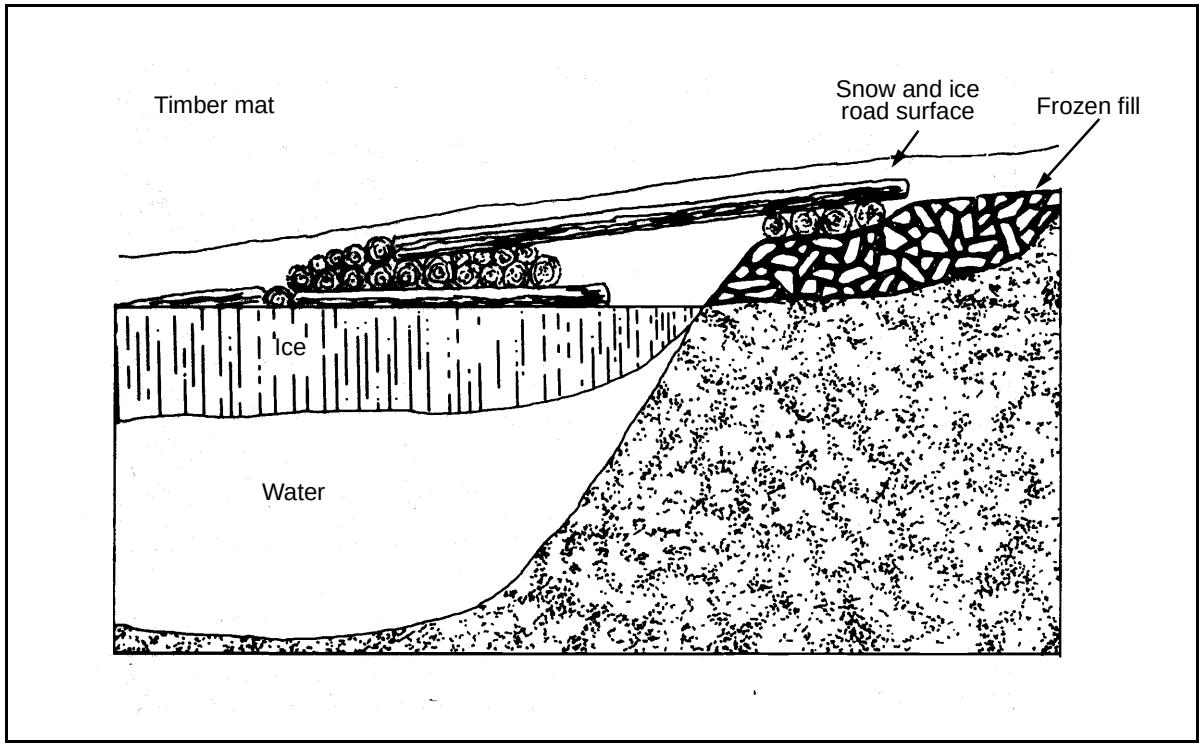

Figure 12-9. Expedient Approach

REINFORCING CROSSINGS

Low Temperature

12-66. During periods of low temperature, increase the thickness of ice by removing the snow cover and allowing the ice to thicken by natural methods. Clear a 150-foot strip along the entire path of the intended crossing. Allow sufficient time for the ice to thicken. A weak ice sheet will increase in thickness by ¼ inch during a 12-hour period at 5°F. In general, the temperature must be less than 15°F for this method to be effective.

Snow Dikes

12-67. This method involves building snow dikes along each side of the desired route about 2½ times the desired road width. Flood the space between the dikes to a depth of about 1 inch and let it freeze. The freezing process takes about 2 hours for a 1-inch thick layer at 5°F. Build the ice in 1-inch increments to permit rapid freezing. The only disadvantage to this reinforcement method is that the capacity of the induced ice is only one-half that of ice resulting from the natural process.

Snow Layering

12-68. The simplest method of reinforcing ice is to lay level layers of snow on top of the desired road and add water to freeze them in place. Allow each layer to freeze before adding subsequent layers. Further reinforcement is possible by adding materials such as brush, straw, or chicken wire between every 2 to 4 inches of frozen snow. *Table 12-1* lists data for reinforcing ice.

Table 12-1. Data for Reinforcing Ice

Material	Thickness of Reinforcing Layer	Requirement for 13-Foot-Wide Track	Increased Bearing Capacity*
Ice and snow (3 layers)	1½ inches (packed layers)	N/A	20%
Straw	2 to 4 inches	6 pounds per foot of run	20%
Straw (3 layers)	2 to 4 inches (each layer)	20 pounds	25%
Brush	2 to 4 inches	2 cubic feet per foot of run	25%
Ice block	Dependent on block size	N/A	N/A
Planks (2-inch)	N/A	Two 3-foot-wide runways	50%
***Assumes a minimum ice thickness of 6 inches.**			

Other Materials

12-69. Many materials are effective for reinforcing ice bridges (logs; wood-plank, corduroy mats; deck components of military floating and fixed bridges; or pierced, steel planks [PSPs]). The ice surface must be leveled before using these materials. Next, firmly anchor the reinforcing material to the ice and cover it with snow. Finally, flood or spray the snow cover with water and allow it to freeze to the original ice surface. Ensure that any metal is painted white and is fully covered to inhibit solar absorption. Also, cover the completed bridge with enough snow to provide a wearing surface. Planks or small logs can also be frozen into place to form runways or tracks for vehicles and sleds. Make each track about 3 feet wide and cover them the same as the other materials mentioned above.

MAINTAINING CROSSINGS

12-70. Frequently check the ice thickness and the water level beneath the ice. Note any cracks, the need for further reinforcement, the snow clearance, the

approach condition, and the adequacy of the wearing surface. Ice capacity is reduced by continual use. A heavily used crossing may have to be relocated.

EXPEDIENT ICE-BRIDGE CONSTRUCTION

12-71. During periods of continual low temperatures (5°F or colder), it is possible to use open areas or ice in standing or slowly flowing water to bridge gaps. Engineers create ice bridges by floating large sections of ice (cut from the rear of the ice pack) into a transverse position across the water gap. Ice bridges are only an expedient temporary measure. Water movement under a floating section of ice can erode the bottom surface and weaken the section. Engineers will need to monitor the ice section continually and determine its bearing capacity. The best location for obtaining a section of ice is where the ice extends for an appreciable distance from the bank and does not vary in thickness or quality. There should be no underwater obstacles near the site. Survey the depth and the bottom conditions to ensure that they are adequate.

12-72. Underwater topography is very important when constructing ice bridges, planning for repairs and rescue, and estimating bridge longevity. If there is insufficient ice along the bank and the temperature is below freezing, an alternate crossing of limited capacity can be built. Tie brush or small trees to a rope or cable, stretch the cable across the waterway, and allow the water to freeze onto the cable to form a crossing. Use the procedures described below for building an ice bridge.

LAYOUT

12-73. Spend the time necessary to determine the required bridge dimensions properly and to complete the layout. *Table 12-2* gives data on typical ice-bridge sizes and the resources necessary for construction. The float must fit the notches created in the layout to be effective. The float should be one-half to one-third as wide as it is long. The minimum width for a single column of soldiers is 15 feet. The notch in which the float fits on the far bank should be 20 to 26 feet deep. The depth of this notch depends on the thickness of the bank ice, the length of the bridge, and the water currents. The notch should be deep enough to prevent splintering and breaking as the float is guided into position.

Table 12-2. Typical Ice-Bridge Construction Data

Bridge Type	Length (feet)	Width or Thickness	Workers Required	Construction Time (hours)
Straight	330	150 feet wide	32	4
Straw	330	Minimum ice thickness: 16 inches	32	1½
Straw (3 layers)	600	Minimum ice thickness: 16 inches	32	4

CUTTING

12-74. After completing the layout, remove the excess ice *(Figure 12-10A)* by sawing it free and then floating it downstream. Make double cuts (6 to 8

inches apart) on the ends of these sections to facilitate their removal. After removing the excess ice, install mooring lines on the float and cut it free.

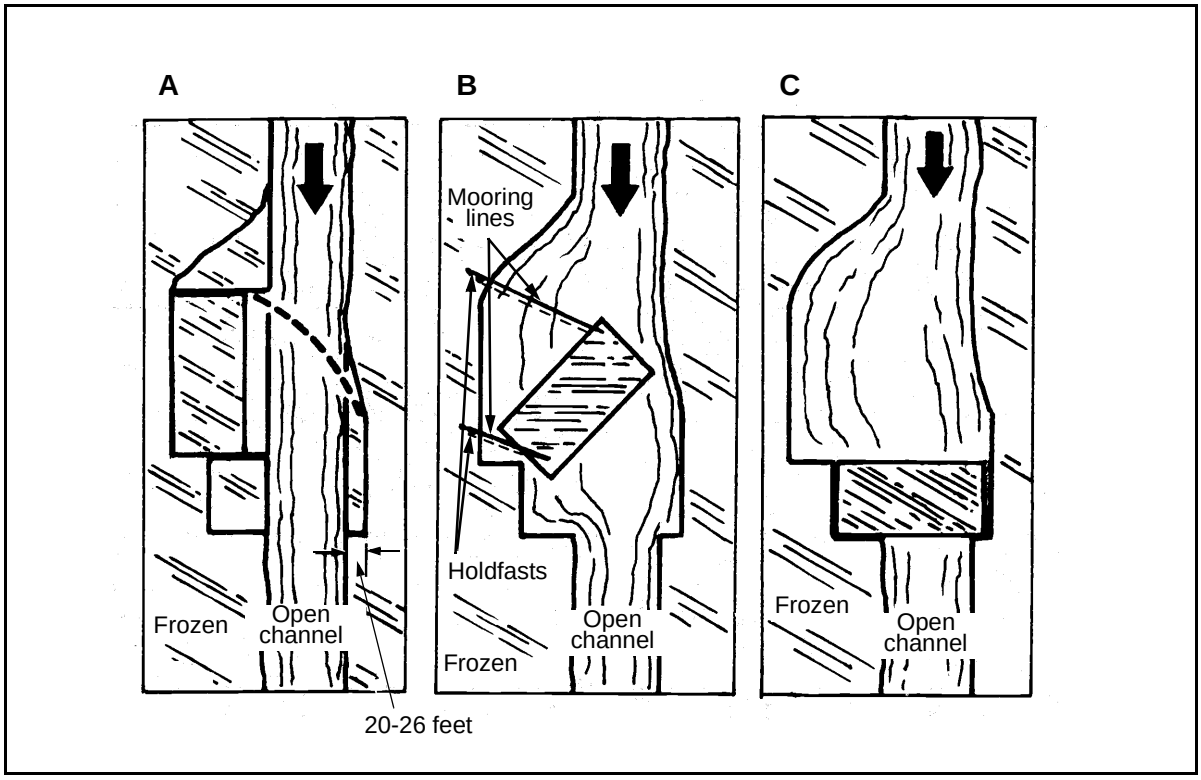

Figure 12-10. Ice-Bridge Layout

FINISHING

12-75. Using the mooring lines, carefully guide the float into its final position *(Figure 12-10B* and *C)*. Bridge the banks and gaps at the end of the float with available timber or prefabricated balk and decking. Mark the traffic lanes and post the bridge capacity.

EXPEDIENT ICE-BRIDGE REINFORECEMENT AND REPAIR

12-76. Use the same methods of reinforcement for ice bridges as previously described for ice crossings. The float will eventually freeze into the notches on both sides and ends, and the float will gradually increase in size as new ice freezes onto its sides. If no bottom-surface erosion is present, the bridge's stability will increase through natural processes. An additional reinforcement method is to add ice blocks to increase the ice bridge's thickness. Cut these blocks from ice at least 200 yards downstream. Place the blocks on top of the existing ice bridge, pack snow around them, spray water on the entire reinforcement, and allow the blocks to freeze together. Reinforcement is also possible by adding M4 balk, Bailey panels, or other standard bridging resources. However, these components will be impossible to salvage.

12-77. The most probable condition requiring repair is broken floats. These breaks can be repaired by *stitching* or *racking* the broken pieces together *(Figure 12-11)*. Follow these steps to repair a break:

Step 1. Bore holes completely through the ice along each side of the crack.

Step 2. Place a doubled-over, two- or four-strand rope through each pair of adjoining holes.

Step 3. Install small boards between the rope and the ice under each hole.

Step 4. Remove the slack from the rope and tie the rope ends.

Step 5. Place a rack stick between the strands of rope and tighten the stitch.

Step 6. Repeat the process for each pair of holes along the crack.

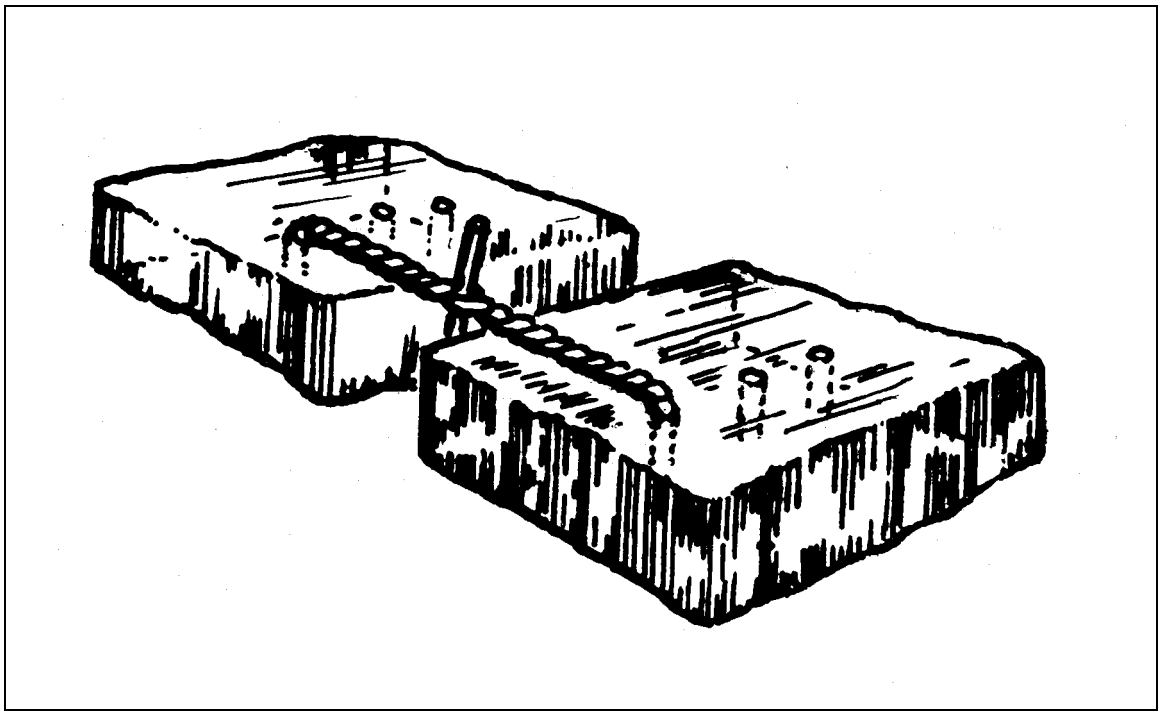

Figure 12-11. Ice Stitching

Appendix A

Conversion Charts

This appendix complies with current army directives, which state that the metric system will be incorporated into all new publications. *Table A-1* shows a metric conversion chart, and *Table A-2* shows conversion factors for temperature and angles.

Table A-1. Metric Conversion Chart

US Units	Multiplied By	Equals Metric Units	Metric Units	Multiplied By	Equals US Units
Length					
Inches	2.5400	Centimeters	Centimeters	0.39370	Inches
Inches	25.4001	Millimeters	Millimeters	0.03937	Inches
Feet	0.3048	Meters	Meters	3.28080	Feet
Feet per second	0.3050	Meter per second	Meter per second	3.28100	Feet per second
Miles	1.6093	Kilometers	Kilometers	0.62140	Miles
Area					
Pounds per square inch	0.0700	Kilogram per square centimeter	Kilogram per square centimeter	14.22300	Pounds per square inch
Square inches	6.4516	Square centimeter	Square centimeter	0.15500	Square inches
Square feet	0.0929	Square meter	Square meter	10.76400	Square feet
Cubic feet	0.0283	Cubic meter	Cubic meter	35.31440	Cubic feet
Cubic inches	16.3900	Cubic centimeters	Cubic centimeters	0.06102	Cubic inches
Volume					
Gallons	3.7854	Liters	Liters	0.26420	Gallons
Mass (Weight)					
Pounds	0.4536	Kilograms	Kilograms	2.20460	Pounds

Table A-2. Temperature and Angle Conversion Chart

Units	Multiplied By	Equals	Units	Multiplied By	Equals
Temperature					
Degrees (F) - 32	0.5556	Degrees (C)	Degrees (C) + 17.8	1.8000	Degrees (F)
Angle					
Degrees (angular)	17.7778	Mils	Mils	0.0562	Degrees (angular)

Appendix B

Vehicle Classification

Vehicles are assigned MLC numbers, which represent the loading effects they have on a bridge. The MLC does not represent the actual weight of a vehicle. It represents a combination of factors that include gross weight, axle spacing, weight distribution to the axles, and speed. All standard Army vehicles and special equipment that are active in the TO and that use bridges of military importance have an MLC. Trailers that are rated with a payload of 1 1/2 tons or less are exceptions. They have a combined classification with their towing vehicle. Classifying vehicles, trailers, or vehicle combinations with a gross weight of 3 tons or less is optional. *FM 5-170* lists classification numbers for most standard US military vehicles. To get the classification numbers for unlisted and nonstandard vehicles, submit load and dimensional information to the US Army Research and Development Center according to the instructions in *FM 5-170*. Expedient classification procedures for emergency situations are explained in this appendix.

HYPOTHETICAL VEHICLES

B-1. *Table B-1, pages B-2* through *B-5*, shows 16 standard classes of hypothetical vehicles ranging from 4 to 150. The weight of the tracked vehicle in short tons was chosen as the classification number. A single-wheeled vehicle has a weight greater than its classification number. Each classification number has a specified maximum single-axle load. Also specified are the maximum tire load, the minimum tire size, and the maximum tire pressure. The classification numbers were originally developed from studies of the hypothetical vehicles having characteristics about the same as those actual military vehicles of NATO nations.

B-2. The moment and shear forces produced by the hypothetical vehicles or single-axle loads are provided in *Tables B-2* and *B-3, pages B-6* through *B-13*. These figures are based on the assumption that the nearest ground contact points of two different vehicles (wheeled or tracked) are 100 feet apart. *Table B-1* gives critical tire loads and tire sizes.

Table B-1. Standard Classes of Hypothetical Vehicles

Hypothetical Vehicles for Classification of Actual Vehicles and Bridges			
1	2	3	4
Class	Tracked Vehicles	Wheeled Vehicles	
		Axle Loads and Spacing	Maximum Single-Axle Load (in Short Tons)
4	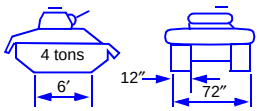	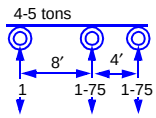	
8	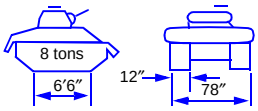	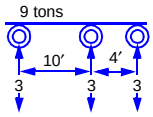	
12	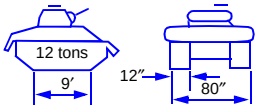	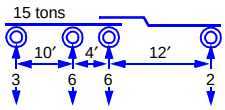	
16	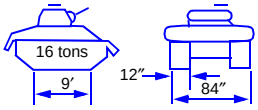	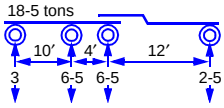	
20	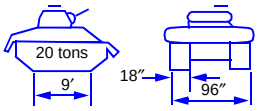	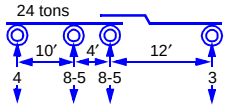	
24	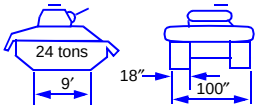	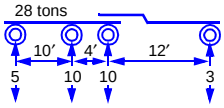	
30	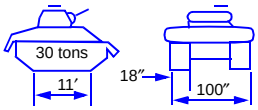	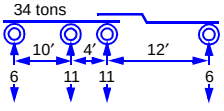	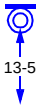
40	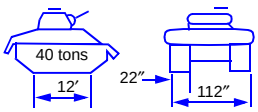	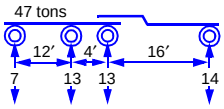	

NOTES:

1. The single-axle tire sizes shown in Columns 5, 6, and 7 refer to the maximum single-axle loads given in Column 4.
2. The bogie-axle tire sizes shown in Columns 5, 6, and 7 refer to the maximum bogie-axle loads shown on the diagrams in Column 3.
3. The maximum tire pressure for all tires shown in Column 8 should be taken as 75 psi. The first dimension of tire size refers to the overall width of the tire and the second dimension is the rim diameter of the tire.

Table B-1. Standard Classes of Hypothetical Vehicles (continued)

Hypothetical Vehicles for Classification of Actual Vehicles and Bridges				
1	**5**	**6**	**7**	**8**
Class	**Wheeled Vehicles**			
	Minimum Wheel Spacing and Tire Sizes of Critical Axles			**Maximum Tire Load and Minimum Tire Size**
4	Single axle: 7 - 50 x 20 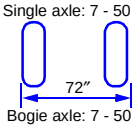 Bogie axle: 7 - 50 x 20	Single axle: 6 - 00 x 20 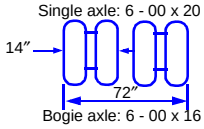 Bogie axle: 6 - 00 x 16		 2,500 lb on 7 - 50 x 20
8	Single axle: 12 - 00 x 20 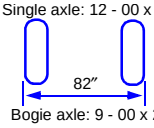 Bogie axle: 9 - 00 x 20	Single axle: 8 - 25 x 20 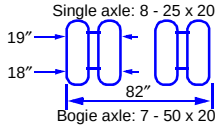 Bogie axle: 7 - 50 x 20		 5,500 lb on 12 - 00 x 20
12	Single axle: 14 - 00 x 20 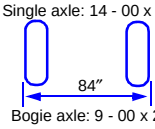 Bogie axle: 9 - 00 x 20	Single axle: 10 - 00 x 20 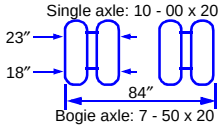 Bogie axle: 7 - 50 x 20		 8,000 lb on 14 - 00 x 20
16	Single axle: 16 - 00 x 24 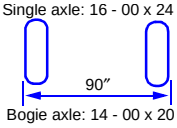 Bogie axle: 14 - 00 x 20	Single axle: 12 - 00 x 20 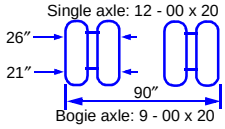 Bogie axle: 9 - 00 x 20	Single axle: 21 - 00 x 20 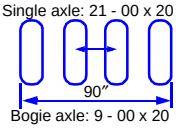 Bogie axle: 9 - 00 x 20	 10,000 lb on 16 - 00 x 24
20	Single axle: 18 - 00 x 24 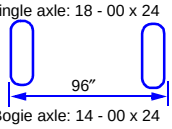 Bogie axle: 14 - 00 x 24	Single axle: 12 - 00 x 20 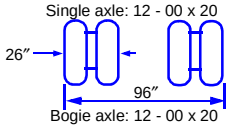 Bogie axle: 12 - 00 x 20	Single axle: 12 - 00 x 20 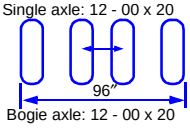 Bogie axle: 12 - 00 x 20	 11,000 lb on 18 - 00 x 24
24	Single axle: 18 - 00 x 24 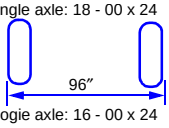 Bogie axle: 16 - 00 x 24	Single axle: 14 - 00 x 20 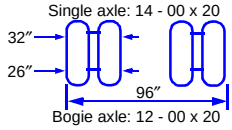 Bogie axle: 12 - 00 x 20	Single axle: 14 - 00 x 20 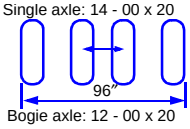 Bogie axle: 12 - 00 x 20	 12,000 lb on 18 - 00 x 24
30	Single axle: 18 - 00 x 24 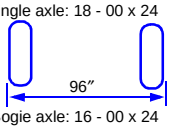 Bogie axle: 16 - 00 x 24	Single axle: 12 - 00 x 20 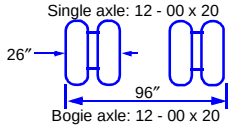 Bogie axle: 12 - 00 x 20	Single axle: 14 - 00 x 20 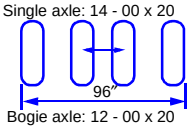 Bogie axle: 12 - 00 x 20	 13,500 lb on 18 - 00 x 24
40	Single axle: 21 - 00 x 24 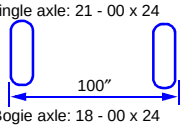 Bogie axle: 18 - 00 x 24	Single axle: 14 - 00 x 24 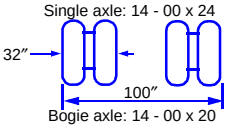 Bogie axle: 14 - 00 x 20	Single axle: 14 - 00 x 24 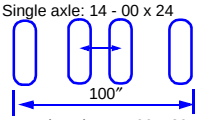 Bogie axle: 14 - 00 x 20	 17,000 lb on 21 - 00 x 24

NOTES:
1. The single-axle tire sizes shown in Columns 5, 6, and 7 refer to the maximum single-axle loads given in Column 4.
2. The bogie-axle tire sizes shown in Columns 5, 6, and 7 refer to the maximum bogie-axle loads shown on the diagrams in Column 3.
3. The maximum tire pressure for all tires shown in Column 8 should be taken as 75 psi. The first dimension of tire size refers to the overall width of the tire and the second dimension is the rim diameter of the tire.

Table B-1. Standard Classes of Hypothetical Vehicles (continued)

Hypothetical Vehicles for Classification of Actual Vehicles and Bridges			
1	2	3	4
Class	Tracked Vehicles	Wheeled Vehicles	
		Axle Loads and Spacing	Maximum Single-Axle Load (in Short Tons)
50	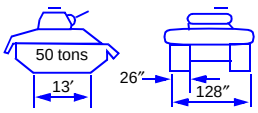	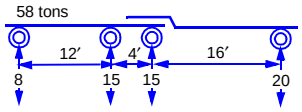	
60	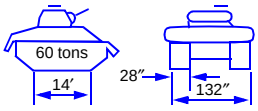	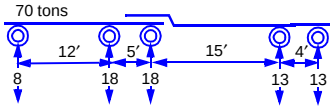	
70	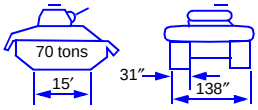	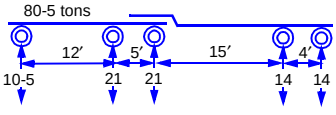	
80	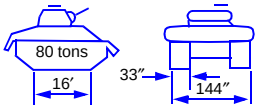	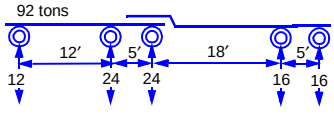	
90	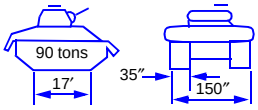	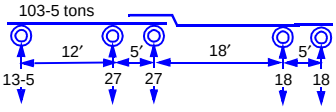	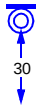
100	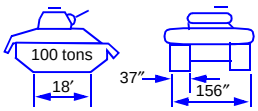	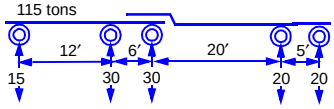	
120	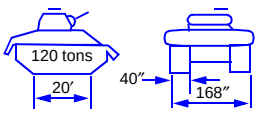	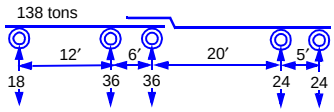	
150	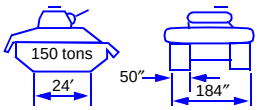	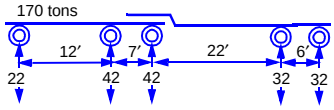	

NOTES:
1. The single-axle tire sizes shown in Columns 5, 6, and 7 refer to the maximum single-axle loads given in Column 4.
2. The bogie-axle tire sizes shown in Columns 5, 6, and 7 refer to the maximum bogie-axle loads shown on the diagrams in Column 3.
3. The maximum tire pressure for all tires shown in Column 8 should be taken as 75 psi. The first dimension of tire size refers to the overall width of the tire and the second dimension is the rim diameter of the tire.

Table B-1. Standard Classes of Hypothetical Vehicles (continued)

Hypothetical Vehicles for Classification of Actual Vehicles and Bridges				
1	5	6	7	8
Class	Wheeled Vehicles			
	Minimum Wheel Spacing and Tire Sizes of Critical Axles			Maximum Tire Load and Minimum Tire Size
50	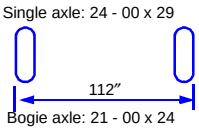	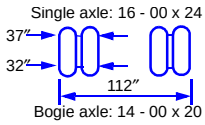	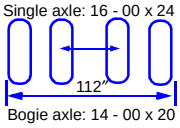	
60		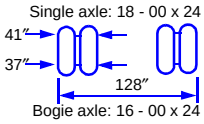	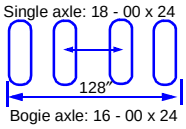	
70		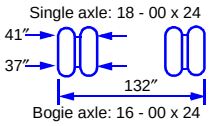	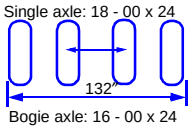	
80		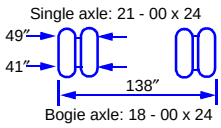	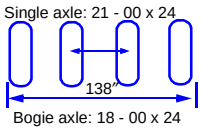	
90		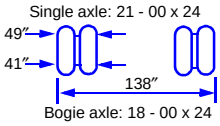	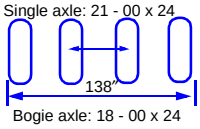	
100		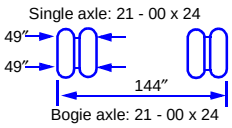	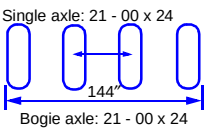	
120			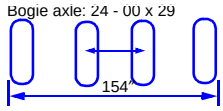	
150			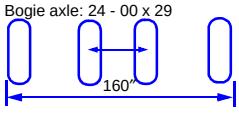	

NOTES:
1. The single-axle tire sizes shown in Columns 5, 6, and 7 refer to the maximum single-axle loads given in Column 4.
2. The bogie-axle tire sizes shown in Columns 5, 6, and 7 refer to the maximum bogie-axle loads shown on the diagrams in Column 3.
3. The maximum tire pressure for all tires shown in Column 8 should be taken as 75 psi. The first dimension of tire size refers to the overall width of the tire and the second dimension is the rim diameter of the tire.

Table B-2. Wheeled- and Tracked-Vehicle Moment (in kip-feet)

Class	Wheeled/ Tracked	Span Length (feet)										
		4	6	8	10	12	14	16	18	20	25	30
4	W	4.96	7.44	9.92	12.40	14.88	17.92	21.40	25.60	30.00	41.00	52.20
	T	2.64	6.00	9.92	14.00	18.00	22.10	25.90	29.90	34.00	44.00	54.00
8	W	10.96	16.44	21.90	27.40	32.90	38.30	43.60	49.30	54.80	71.00	93.60
	T	4.88	11.04	19.04	27.00	35.00	43.10	50.90	59.00	66.80	87.00	106.80
12	W	16.00	24.00	32.00	40.00	48.00	56.00	64.00	72.00	80.80	112.50	145.20
	T	5.44	12.00	21.30	33.00	44.90	57.10	69.10	81.00	92.80	123.00	153.00
16	W	20.00	30.00	40.00	50.00	60.00	70.00	80.00	92.50	105.20	144.00	184.20
	T	7.12	15.96	28.50	44.00	60.00	75.90	91.80	108.00	124.00	164.00	204.00
20	W	22.00	33.00	44.00	55.00	70.80	87.40	104.00	121.00	137.60	188.50	241.00
	T	8.88	20.00	35.50	55.00	74.90	94.90	114.90	135.00	154.80	205.00	255.00
24	W	24.00	36.00	48.00	64.00	83.30	102.80	122.60	142.20	162.00	223.00	285.00
	T	10.64	24.00	42.70	66.00	90.00	114.00	137.90	162.00	186.00	246.00	306.00
30	W	26.70	40.40	53.90	70.40	91.70	113.10	134.70	156.60	178.00	246.00	316.00
	T	10.88	24.50	43.70	68.20	97.40	127.40	157.40	187.60	218.00	293.00	367.00
40	W	34.00	51.00	68.00	85.00	108.30	133.80	159.40	185.00	210.00	277.00	359.00
	T	13.36	30.00	53.30	83.40	120.00	158.90	200.00	240.00	280.00	380.00	480.00
50	W	40.00	60.00	80.00	100.00	125.00	154.30	183.70	213.00	243.00	320.00	415.00
	T	15.36	34.60	61.60	96.20	138.50	187.60	237.00	288.00	338.00	463.00	587.00
60	W	46.00	69.00	92.00	115.00	138.00	170.00	205.00	240.00	276.00	365.00	474.00
	T	17.12	38.50	68.60	107.20	154.30	210.00	270.00	330.00	390.00	540.00	690.00
70	W	51.00	76.40	101.90	127.40	157.90	198.20	239.00	280.00	322.00	426.00	557.00
	T	18.64	42.00	74.70	116.60	168.00	229.00	298.00	368.00	438.00	613.00	787.00
80	W	56.00	84.00	112.00	140.00	180.50	227.00	273.00	320.00	368.00	486.00	636.00
	T	20.00	45.00	80.00	125.00	180.00	245.00	320.00	400.00	480.00	680.00	880.00
90	W	60.00	90.00	120.00	151.80	203.00	225.00	308.00	360.00	414.00	547.00	716.00
	T	21.20	47.60	84.60	132.40	190.60	259.00	339.00	427.00	518.00	743.00	967.00
100	W	64.00	96.00	128.00	160.00	203.00	259.00	317.00	375.00	434.00	581.00	765.00
	T	22.20	50.00	89.00	138.80	199.90	272.00	356.00	450.00	550.00	800.00	1,050.00
120	W	72.00	108.00	144.00	180.00	243.00	311.00	380.00	450.00	520.00	697.00	918.00
	T	24.00	54.00	96.00	150.00	216.00	294.00	384.00	486.00	600.00	900.00	1,200.00
150	W	84.00	126.00	168.00	210.00	253.00	331.00	410.00	491.00	572.00	777.00	1,032.00
	T	25.00	56.30	100.00	156.20	225.00	306.00	400.00	506.00	625.00	975.00	1,350.00

Table B-2. Wheeled- and Tracked-Vehicle Moment (in kip-feet) (continued)

Class	Wheeled/ Tracked	Span Length (feet)									
		35	40	45	50	55	60	70	80	90	100
4	W	63.70	75.20	86.40	97.00	108.90	120.00	142.80	164.80	187.20	210.00
	T	63.70	73.80	83.70	94.00	103.40	114.00	134.40	153.60	174.60	194.00
8	W	116.20	138.40	161.10	183.00	206.00	228.00	273.00	318.00	364.00	408.00
	T	126.70	147.20	167.40	187.00	207.00	227.00	267.00	307.00	347.00	386.00
12	W	180.60	218.00	256.00	293.00	331.00	368.00	444.00	518.00	592.00	668.00
	T	182.70	213.00	243.00	273.00	303.00	332.00	393.00	453.00	513.00	572.00
16	W	229.00	275.00	321.00	367.00	414.00	460.00	552.00	645.00	736.00	830.00
	T	244.00	284.00	324.00	364.00	404.00	444.00	524.00	603.00	684.00	764.00
20	W	299.00	359.00	419.00	479.00	539.00	599.00	718.00	838.00	958.00	1,078.00
	T	305.00	355.00	405.00	455.00	505.00	554.00	655.00	755.00	855.00	954.00
24	W	353.00	422.00	492.00	562.00	633.00	702.00	843.00	982.00	1,121.00	1,262.00
	T	366.00	426.00	486.00	546.00	606.00	666.00	785.00	906.00	1,026.00	1,146.00
30	W	398.00	482.00	567.00	652.00	737.00	822.00	991.00	1,162.00	1,130.00	1,500.00
	T	442.00	518.00	592.00	667.00	743.00	817.00	967.00	1,117.00	1,267.00	1,418.00
40	W	442.00	553.00	671.00	788.00	905.00	1,022.00	1,257.00	1,493.00	1,728.00	1,962.00
	T	580.00	680.00	780.00	880.00	980.00	1,080.00	1,280.00	1,480.00	1,679.00	1,880.00
50	W	511.00	656.00	800.00	945.00	1,090.00	1,235.00	1,525.00	1,814.00	2,100.00	2,390.00
	T	713.00	838.00	962.00	1,087.00	1,212.00	1,338.00	1,588.00	1,837.00	2,090.00	2,340.00
60	W	584.00	740.00	914.00	1,089.00	1,263.00	1,438.00	1,786.00	2,140.00	2,490.00	2,840.00
	T	840.00	990.00	1,140.00	1,290.00	1,440.00	1,590.00	1,890.00	2,190.00	2,490.00	2,790.00
70	W	688.00	856.00	1,057.00	1,257.00	1,458.00	1,658.00	2,060.00	2,460.00	2,870.00	3,270.00
	T	963.00	1,138.00	1,312.00	1,478.00	1,662.00	1,837.00	2,190.00	2,540.00	2,890.00	3,240.00
80	W	786.00	936.00	1,103.00	1,332.00	1,561.00	1,790.00	2,250.00	2,710.00	3,170.00	3,630.00
	T	1,080.00	1,280.00	1,480.00	1,680.00	1,880.00	2,080.00	2,480.00	2,880.00	3,280.00	3,680.00
90	W	884.00	1,053.00	1,242.00	1,499.00	1,757.00	2,010.00	2,530.00	3,050.00	3,560.00	4,080.00
	T	1,193.00	1,418.00	1,643.00	1,867.00	2,090.00	2,320.00	2,770.00	3,220.00	3,670.00	4,120.00
100	W	953.00	1,140.00	1,328.00	1,543.00	1,828.00	2,110.00	2,690.00	3,260.00	3,830.00	4,410.00
	T	1,300.00	1,550.00	1,800.00	2,050.00	2,300.00	2,550.00	3,050.00	3,550.00	4,050.00	4,550.00
120	W	1,143.00	1,368.00	1,593.00	1,851.00	2,195.00	2,540.00	3,230.00	3,910.00	4,600.00	5,290.00
	T	1,500.00	1,800.00	2,100.00	2,400.00	2,700.00	3,000.00	3,600.00	4,200.00	4,800.00	5,400.00
150	W	1,297.00	1,562.00	1,827.00	2,092.00	2,405.00	2,830.00	3,670.00	4,520.00	5,560.00	6,210.00
	T	1,725.00	2,100.00	2,478.00	2,850.00	3,230.00	3,600.00	4,350.00	5,100.00	5,850.00	6,600.00

Table B-2. Wheeled- and Tracked-Vehicle Moment (in kip-feet) (continued)

Class	Wheeled/ Tracked	Span Length (feet)									
		110	120	130	140	150	160	170	180	190	200
4	W	233	254	278	270	321	346	367	389	414	448
	T	213	233	255	274	294	314	333	353	391	428
8	W	453	499	543	588	633	678	724	767	813	880
	T	427	468	507	546	588	627	666	706	775	852
12	W	744	818	892	969	1,044	1,117	1,193	1,267	1,341	1,416
	T	634	694	754	812	873	934	993	1,051	1,136	1,248
16	W	922	1,015	1,108	1,198	1,293	1,386	1,476	1,570	1,661	1,752
	T	845	924	1,004	1,084	1,164	1,245	1,323	1,404	1,516	1,664
20	W	1,199	1,318	1,438	1,557	1,677	1,798	1,918	2,040	2,160	2,280
	T	1,054	1,154	1,256	1,355	1,455	1,555	1,656	1,753	1,896	2,080
24	W	1,401	1,543	1,682	1,823	1,962	2,100	2,240	2,380	2,520	2,660
	T	1,265	1,385	1,505	1,627	1,746	1,866	1,986	2,110	2,280	2,500
30	W	1,670	1,841	2,010	2,180	2,350	2,520	2,690	2,860	3,030	3,200
	T	1,566	1,718	1,867	2,020	2,170	2,310	2,470	2,620	2,790	3,070
40	W	2,200	2,430	2,670	2,900	3,140	3,370	3,610	3,840	4,080	4,310
	T	2,080	2,280	2,480	2,680	2,880	3,080	3,280	3,480	3,680	4,050
50	W	2,680	2,970	3,260	3,550	3,840	4,130	4,420	4,710	5,000	5,290
	T	2,590	2,840	3,090	3,340	3,590	3,840	4,090	4,340	4,590	5,020
60	W	3,190	3,540	3,880	4,230	4,580	4,930	5,280	5,630	5,990	6,330
	T	3,090	3,390	3,690	4,000	4,290	4,590	4,890	5,190	5,490	5,970
70	W	3,670	4,070	4,470	4,880	5,280	5,680	6,080	6,490	6,890	7,290
	T	3,590	3,940	4,290	4,640	4,990	5,340	5,690	6,040	6,390	6,900
80	W	4,090	4,550	5,010	5,460	5,930	6,380	6,840	7,300	7,760	8,820
	T	4,080	4,480	4,880	5,280	5,680	6,080	6,480	6,880	7,280	7,810
90	W	4,600	5,110	5,630	6,150	6,670	7,180	7,700	8,220	8,730	9,250
	T	4,570	5,020	5,470	5,920	6,370	6,820	7,270	7,720	8,170	8,700
100	W	4,980	5,560	6,130	6,710	7,280	7,860	8,430	9,000	9,580	10,160
	T	5,050	5,550	6,050	6,550	7,050	7,550	8,050	8,550	9,050	9,570
120	W	5,980	6,670	7,360	8,050	8,740	9,430	10,120	10,810	11,500	12,180
	T	6,000	6,600	7,200	7,800	8,400	9,000	9,600	10,200	10,800	11,400
150	W	7,060	7,910	8,760	9,600	10,450	11,300	12,150	13,000	13,850	14,700
	T	7,350	8,100	8,850	9,600	10,350	11,100	11,850	12,600	13,350	14,100

Table B-2. Wheeled- and Tracked-Vehicle Moment (in kip-feet) (continued)

Class	Wheeled/ Tracked	Span Length (feet)									
		210	220	230	240	250	260	270	280	290	300
4	W	491	532	579	619	665	733	799	868	934	1,002
	T	466	502	538	586	645	707	767	823	887	948
8	W	966	1,052	1,136	1,224	1,310	1,414	1,550	1,686	1,821	1,956
	T	924	1,003	1,076	1,162	1,285	1,404	1,523	1,641	1,763	1,884
12	W	1,491	1,593	1,734	1,877	2,020	2,160	2,310	2,450	2,660	2,890
	T	1,361	1,474	1,587	1,704	1,855	2,040	2,220	2,400	2,580	2,750
16	W	1,848	1,958	2,130	2,390	2,490	2,660	2,840	3,020	3,290	3,570
	T	1,814	1,967	2,120	2,270	2,480	2,710	2,950	3,200	3,430	3,680
20	W	2,400	2,540	2,770	3,000	3,230	3,460	3,690	3,920	4,270	4,630
	T	2,270	2,460	2,650	2,840	3,100	3,400	3,690	3,990	4,290	4,600
24	W	2,800	2,970	3,240	3,500	3,700	4,040	4,310	4,580	4,990	5,410
	T	2,720	2,950	3,170	3,400	3,720	4,070	4,430	4,790	5,160	5,510
30	W	3,370	3,590	3,910	4,240	4,570	4,890	5,220	5,550	6,020	6,530
	T	3,350	3,630	3,910	4,200	4,510	4,960	5,410	5,860	6,310	6,760
40	W	4,550	4,780	5,140	5,590	6,040	6,490	6,940	7,400	7,850	8,310
	T	4,430	4,800	5,180	5,560	5,940	6,520	7,120	7,720	8,320	8,920
50	W	5,580	5,870	6,370	6,930	7,480	8,030	8,590	9,150	9,710	10,270
	T	5,490	5,950	6,430	6,900	7,380	8,040	8,790	9,540	10,290	11,040
60	W	6,680	7,030	7,410	8,070	8,740	9,410	10,050	10,760	11,430	12,110
	T	6,530	7,090	7,650	8,220	8,800	9,510	10,410	11,310	12,210	13,110
70	W	7,690	8,100	8,500	9,260	10,030	10,800	11,570	12,350	13,130	13,910
	T	7,550	8,200	8,860	9,530	10,200	10,940	11,990	13,040	14,090	15,140
80	W	8,680	9,140	9,600	10,180	11,060	11,940	12,830	13,720	14,610	15,500
	T	8,550	9,300	10,060	10,810	11,580	12,340	13,520	14,720	15,920	17,120
90	W	9,770	10,290	10,810	11,450	12,450	13,440	14,430	15,440	16,440	17,440
	T	9,530	10,380	11,220	12,080	12,940	13,800	15,010	16,360	17,710	19,060
100	W	10,730	11,300	11,880	12,450	13,480	14,580	15,690	16,800	17,910	19,030
	T	10,500	11,440	12,380	13,330	14,280	15,230	16,450	17,950	19,450	21,000
120	W	12,870	13,570	14,260	14,940	16,170	17,490	18,820	20,200	21,500	22,800
	T	12,380	13,500	14,630	15,760	16,910	18,050	19,200	21,000	22,800	24,600
150	W	15,550	16,400	17,250	18,100	19,300	20,900	22,500	24,200	25,800	27,500
	T	14,910	16,320	17,720	19,140	20,600	22,000	23,400	24,700	27,200	29,400

Table B-3. Wheeled- and Tracked-Vehicle Shear (in tons)

Class	Wheeled/ Tracked	Span Length (feet)									
		4	6	8	10	12	14	16	18	20	25
4	W	2.50	2.50	2.63	2.80	2.92	3.14	3.31	3.44	3.55	3.74
	T	1.33	2.00	2.50	2.80	3.00	3.14	3.25	3.33	3.40	3.52
8	W	5.50	5.50	5.50	5.50	5.50	5.50	5.63	6.00	6.30	6.84
	T	2.46	3.69	4.75	5.40	5.83	6.14	6.38	6.56	6.70	6.96
12	W	8.00	8.00	8.00	8.00	8.33	8.57	9.13	9.56	9.90	10.52
	T	2.67	4.00	5.33	6.60	7.50	8.14	8.62	9.00	9.30	9.84
16	W	10.00	10.00	10.00	10.40	10.83	11.14	11.75	12.22	12.60	13.28
	T	3.56	5.33	7.11	8.80	10.00	10.86	11.50	12.00	12.40	13.12
20	W	11.00	11.33	12.75	13.60	14.17	14.57	15.38	16.00	16.50	17.40
	T	4.44	6.67	8.89	11.00	12.50	13.57	14.38	15.00	15.50	16.40
24	W	12.00	13.33	15.00	16.00	16.67	17.14	18.13	18.89	19.50	20.60
	T	5.53	8.00	10.67	13.20	15.00	16.28	17.25	18.00	18.60	19.68
30	W	13.50	14.67	16.50	17.60	18.33	18.86	20.00	20.89	21.60	22.88
	T	5.46	8.18	10.91	13.64	16.25	18.22	19.69	20.83	21.75	23.40
40	W	17.00	17.33	19.50	20.80	21.67	22.29	22.75	23.89	24.80	26.72
	T	6.67	10.00	13.33	16.67	20.00	22.86	25.00	26.67	28.00	30.40
50	W	20.00	20.00	22.50	24.00	25.00	25.71	26.25	27.56	28.60	31.60
	T	7.69	11.54	15.38	19.23	23.08	26.78	29.69	31.94	33.75	37.00
60	W	23.00	23.00	24.75	27.00	28.50	29.57	30.38	31.44	32.70	35.52
	T	8.57	12.86	17.14	21.43	25.72	30.00	33.75	36.67	39.00	43.20
70	W	25.50	25.50	28.88	31.50	33.25	34.50	35.44	36.75	38.33	41.16
	T	9.33	14.00	18.67	23.33	28.00	32.67	37.19	40.83	43.75	49.00
80	W	28.00	28.00	33.00	36.00	38.00	39.43	40.50	42.00	43.80	47.04
	T	10.00	15.00	20.00	25.00	30.00	35.00	40.00	44.44	48.00	54.40
90	W	30.00	31.50	37.13	40.50	42.75	44.36	45.56	47.25	49.28	52.92
	T	10.59	15.88	21.18	26.47	31.76	37.06	42.35	47.50	51.75	59.40
100	W	32.00	32.00	37.50	42.00	45.00	47.14	48.75	50.00	52.50	57.00
	T	11.11	16.67	22.22	27.78	33.33	38.89	44.44	50.00	55.00	64.00
120	W	36.00	36.00	45.00	50.40	54.00	56.57	38.50	60.00	63.00	68.40
	T	12.00	18.00	24.00	30.00	36.00	42.00	48.00	54.00	60.00	72.00
150	W	42.00	42.00	47.25	54.60	59.50	63.00	65.63	67.67	70.40	77.52
	T	12.50	18.75	25.00	31.25	37.50	43.75	50.00	56.25	62.50	78.00

Table B-3. Wheeled- and Tracked-Vehicle Shear (in tons) (continued)

Class	Wheeled/ Tracked	Span Length (feet)										
		30	35	40	45	50	55	60	70	80	90	100
4	W	3.87	3.96	4.03	4.08	4.12	4.15	4.18	4.23	4.26	4.29	4.31
	T	3.60	3.66	3.70	3.73	3.76	3.78	3.80	3.83	3.85	3.87	3.88
8	W	7.20	7.46	7.65	7.80	7.92	8.02	8.10	8.23	8.33	8.40	8.46
	T	7.13	7.26	7.35	7.42	7.48	7.53	7.57	7.63	7.68	7.71	7.74
12	W	10.93	11.23	11.45	11.62	11.76	11.87	12.13	12.54	12.85	13.09	13.28
	T	10.20	10.46	10.65	10.80	10.92	11.02	11.10	11.23	11.32	11.40	11.46
16	W	13.73	14.06	14.30	14.49	14.64	14.76	14.87	15.34	15.74	16.04	16.29
	T	13.60	13.94	14.20	14.40	14.56	14.69	14.80	14.97	15.10	15.20	15.28
20	W	18.00	18.43	18.75	19.00	19.20	19.36	19.50	19.97	20.48	20.87	21.18
	T	17.00	17.43	17.75	18.00	18.20	18.36	18.50	18.72	18.88	19.00	19.10
24	W	21.33	21.86	22.25	22.56	22.80	23.00	23.17	23.46	24.03	24.47	24.82
	T	20.40	20.92	21.30	21.60	21.84	22.04	22.20	22.46	22.65	22.80	22.92
30	W	23.73	24.34	24.80	25.16	25.60	26.36	27.00	28.00	28.75	29.33	29.80
	T	24.50	25.28	25.88	26.33	26.70	27.00	27.25	27.64	27.94	28.17	28.35
40	W	28.93	30.51	31.70	32.62	33.36	34.42	35.47	37.11	38.35	39.31	40.08
	T	32.00	33.14	34.00	34.67	35.20	35.64	36.00	36.57	37.00	37.33	37.60
50	W	34.67	36.86	38.50	40.31	42.08	43.53	44.73	46.63	48.05	49.16	50.04
	T	39.17	40.72	41.88	42.78	43.50	44.09	44.58	45.36	45.94	46.39	46.75
60	W	39.93	42.09	45.45	47.29	48.76	49.96	51.43	54.09	56.08	57.62	58.86
	T	46.00	48.00	49.50	50.67	51.60	52.36	53.00	54.00	54.75	55.33	55.60
70	W	45.97	49.40	51.98	53.98	55.58	56.89	58.22	61.40	63.79	65.64	67.13
	T	52.50	55.00	56.88	58.33	59.50	60.46	61.25	62.50	63.44	64.17	64.75
80	W	49.20	53.26	56.60	59.20	61.28	62.98	64.40	66.63	69.70	72.18	74.16
	T	58.67	61.72	64.00	65.78	67.20	68.36	69.33	70.86	72.00	72.89	73.60
90	W	55.35	59.91	63.68	66.60	68.94	70.85	72.45	74.96	78.41	81.20	83.43
	T	64.50	68.14	70.88	73.00	74.70	76.09	77.25	79.07	80.44	81.50	82.35
100	W	60.02	64.57	69.00	72.44	75.20	77.45	79.33	82.29	84.69	88.06	90.75
	T	70.00	74.28	77.50	80.00	82.00	83.64	85.00	87.14	88.75	90.00	91.00
120	W	72.02	77.49	82.80	86.93	90.24	92.94	95.20	98.74	101.60	105.70	108.90
	T	80.00	85.71	90.00	93.33	96.00	98.18	100.00	102.90	105.00	106.70	108.00
150	W	82.98	85.66	89.45	95.76	101.20	105.40	109.00	114.70	121.60	127.00	131.30
	T	90.00	98.57	105.00	110.00	114.00	117.30	120.00	124.30	127.50	130.00	132.00

Table B-3. Wheeled- and Tracked-Vehicle Shear (in tons) (continued)

Class	Wheeled/ Tracked	Span Length (feet)									
		110	120	130	140	150	160	170	180	190	200
4	W	4.33	4.52	4.83	5.13	5.39	5.61	5.81	5.99	6.15	6.29
	T	3.94	4.27	4.56	4.80	5.01	5.20	5.36	5.51	5.64	5.76
8	W	8.51	8.75	9.28	9.90	10.44	10.91	11.33	11.70	12.03	12.33
	T	7.83	8.47	9.05	9.54	9.97	10.35	10.68	10.98	11.24	11.48
12	W	13.44	13.57	13.77	14.21	15.13	16.04	16.86	17.59	18.24	18.83
	T	11.52	12.20	13.10	13.89	14.56	15.15	15.67	16.13	16.55	16.92
16	W	16.50	16.65	16.89	17.41	18.55	19.67	20.69	21.59	22.41	23.14
	T	15.35	16.27	17.48	18.51	19.41	20.20	20.89	21.51	22.06	22.56
20	W	21.44	21.65	21.95	22.63	24.12	25.58	26.89	28.07	29.12	30.06
	T	19.19	20.33	21.85	23.14	24.27	25.25	26.12	26.89	27.58	28.20
24	W	25.11	25.35	25.71	26.51	28.28	29.98	31.51	32.87	33.67	35.18
	T	23.03	24.40	26.22	27.77	29.12	30.30	31.34	32.27	33.09	33.84
30	W	30.18	30.50	30.95	31.91	33.92	35.98	37.36	39.53	41.03	42.38
	T	28.50	29.55	31.85	33.86	35.60	37.13	38.47	39.67	40.74	41.70
40	W	40.71	41.23	41.68	42.86	44.24	46.75	49.36	51.84	54.06	56.06
	T	37.82	38.89	41.85	44.57	46.93	49.00	50.82	52.44	53.89	55.20
50	W	50.76	51.37	51.88	53.46	55.29	58.40	61.60	64.62	67.33	69.76
	T	47.04	48.08	51.54	55.00	58.00	60.63	62.94	65.00	66.84	68.50
60	W	59.87	60.71	61.43	62.41	63.57	67.18	70.99	74.74	78.17	81.26
	T	56.18	57.14	60.92	65.14	68.80	72.00	74.82	77.33	79.58	81.60
70	W	68.35	69.36	70.22	71.35	73.88	76.65	80.99	85.31	89.31	92.89
	T	65.23	66.11	70.00	75.00	79.33	83.13	86.47	89.44	92.10	94.50
80	W	75.78	77.13	78.28	79.26	81.71	84.35	87.95	92.62	97.43	101.80
	T	74.18	75.00	78.85	84.57	89.60	93.89	97.77	101.20	104.30	107.10
90	W	85.25	86.77	88.06	89.16	91.92	94.89	98.85	104.20	109.60	114.50
	T	83.04	83.82	87.56	93.86	99.60	104.60	109.10	113.00	116.50	119.70
100	W	92.95	94.79	96.35	97.68	100.00	103.50	106.90	112.20	117.90	123.50
	T	91.82	92.59	96.15	102.90	109.30	115.00	120.00	124.40	128.40	132.00
120	W	111.50	113.80	115.60	117.20	120.00	124.20	128.20	134.60	141.50	148.20
	T	109.10	110.00	113.10	120.00	128.00	135.00	141.20	146.70	151.60	156.00
150	W	134.80	137.70	140.20	142.30	144.80	149.80	154.80	160.30	168.20	176.30
	T	133.60	135.00	137.00	142.90	152.00	161.30	169.40	176.70	183.20	189.00

Table B-3. Wheeled- and Tracked-Vehicle Shear (in tons) (continued)

Class	Wheeled/ Tracked	Span Length (feet)									
		210	220	230	240	250	260	270	280	290	300
4	W	6.42	6.54	6.70	6.96	7.22	7.47	7.69	7.90	8.09	8.27
	T	5.87	6.05	6.31	6.55	6.77	6.97	7.16	7.33	7.49	7.64
8	W	12.60	12.84	13.10	13.53	14.04	14.54	15.00	15.43	15.83	16.20
	T	11.70	12.03	12.55	13.02	13.46	13.87	14.24	14.59	14.92	15.22
12	W	19.36	19.85	20.29	20.69	21.06	21.50	22.15	22.91	23.67	24.38
	T	17.26	17.58	18.23	18.97	19.66	20.28	20.87	21.41	21.91	22.38
16	W	23.80	24.40	24.94	25.45	25.91	26.43	27.22	28.16	29.10	29.98
	T	23.01	23.43	24.31	25.30	26.21	27.05	27.82	28.54	29.21	29.84
20	W	30.91	31.69	32.40	33.05	33.65	34.32	35.36	36.58	37.80	38.94
	T	28.76	29.29	30.39	31.62	32.76	33.81	34.78	35.68	36.52	37.30
24	W	36.17	37.07	37.90	38.65	39.34	40.14	41.36	42.79	44.21	45.54
	T	34.51	35.15	36.47	37.95	39.31	40.57	41.73	42.81	43.82	44.76
30	W	43.60	44.71	45.72	46.65	47.50	48.48	49.91	51.60	53.34	54.96
	T	42.57	43.36	44.47	46.31	48.06	49.67	51.17	52.55	53.84	55.05
40	W	57.87	59.51	61.01	62.38	63.65	64.82	66.21	67.70	69.81	72.04
	T	56.38	57.45	58.70	61.00	63.36	65.54	67.56	69.43	71.17	72.80
50	W	71.96	73.96	75.79	77.47	79.01	80.43	82.19	84.11	86.73	89.48
	T	70.00	71.36	72.74	75.31	78.30	81.06	83.61	85.98	88.19	90.25
60	W	84.06	86.60	88.92	91.05	93.01	94.82	96.49	98.60	100.92	103.87
	T	83.43	85.09	86.65	89.29	92.88	96.23	99.33	102.20	104.90	107.40
70	W	96.13	99.08	101.80	104.20	106.50	108.60	110.60	113.00	115.60	118.90
	T	96.67	98.64	100.40	103.10	107.10	111.10	114.70	118.10	121.30	124.30
80	W	105.70	109.20	112.50	115.50	118.20	120.70	123.10	125.30	128.10	131.00
	T	109.60	112.00	114.10	116.70	121.00	125.50	129.80	133.70	137.40	140.80
90	W	118.90	122.90	126.60	129.90	133.00	135.80	138.50	140.90	144.10	147.40
	T	122.60	125.20	127.60	130.10	134.50	139.70	144.50	149.00	153.20	157.10
100	W	128.60	133.20	137.40	141.30	144.80	148.10	151.10	153.90	156.80	160.60
	T	135.20	138.20	140.90	143.50	147.70	153.50	158.90	163.90	168.60	173.00
120	W	154.30	159.80	164.90	169.50	173.80	177.70	181.40	184.70	188.20	192.70
	T	160.00	163.60	167.00	170.00	174.00	180.00	186.70	192.90	198.60	204.00
150	W	184.10	191.20	197.77	203.60	209.10	214.40	218.80	223.10	227.10	231.50
	T	194.30	199.10	203.50	207.50	211.30	216.30	223.40	231.40	239.00	246.00

STANDARD CLASSIFICATION CURVES

B-3. Standard classification curves were developed for classifying vehicles, for designing nonstandard bridges, and for estimating the capacity of existing bridges. Each standard class has a moment and a shear curve *(Figure B-1* and *Figures B-2* through *B-4, pages B-16* through *B-18)*. The maximum moment and shear forces were induced against the simple-span lengths by the hypothetical vehicles for each standard class. These forces were plotted to determine the curves. The actual values for the curves are found in *Tables B-2* and *B-3, pages B-6* through *B-13*. Note that in the curves, shear is represented in units of kips; however, in *Table B-3,* shear is represented in units of tons. No allowance is made for impact, and the assumption is made that all vehicles will maintain the normal convoy spacing of 100 feet between ground contact points.

ANALYTICAL CLASSIFICATION PROCEDURE

B-4. Use the analytical method for classifying nonstandard or enemy vehicles in the TO. Standard vehicles are normally classified using *FM 5-170*, but if necessary, use the analytical method to classify standard vehicles.

B-5. To classify a vehicle using the analytical method, the following dimensional and weight-distribution data are needed:

- Weight (empty and loaded).
- Load on each axle (empty and loaded).
- Load on the fifth wheel, pintle, and so forth (empty and loaded).
- Tire size and pressure per axle.
- Number of tires per axle.
- Distance between the axles.
- Distance from the pintle or fifth wheel to the nearest wheel.
- Width (outside-to-outside) of the tires or tracks and width (inside-to-inside) of the tires or tracks.
- Length of the track that is in contact with the ground.

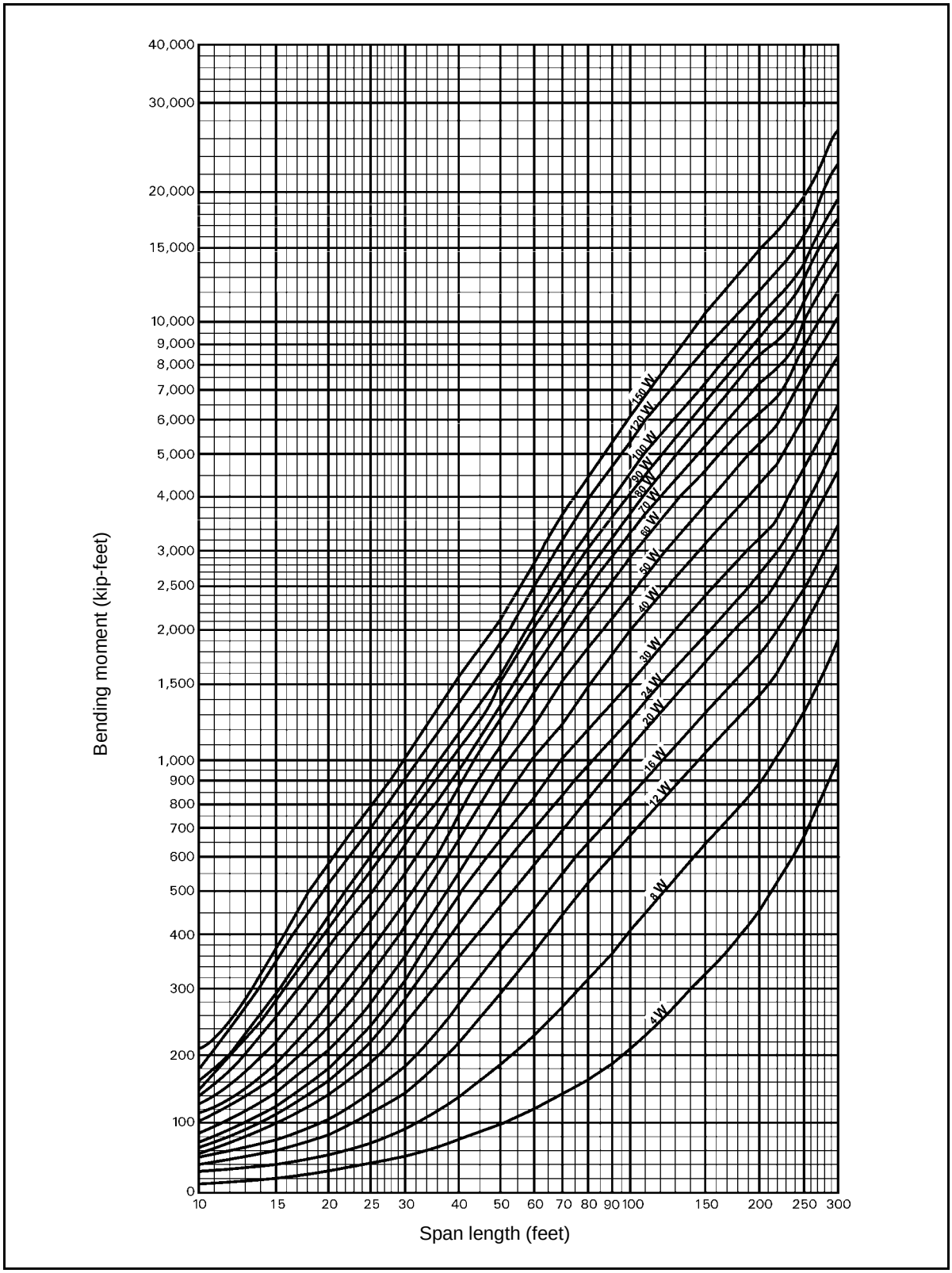

Figure B-1. Wheeled Bending Moment

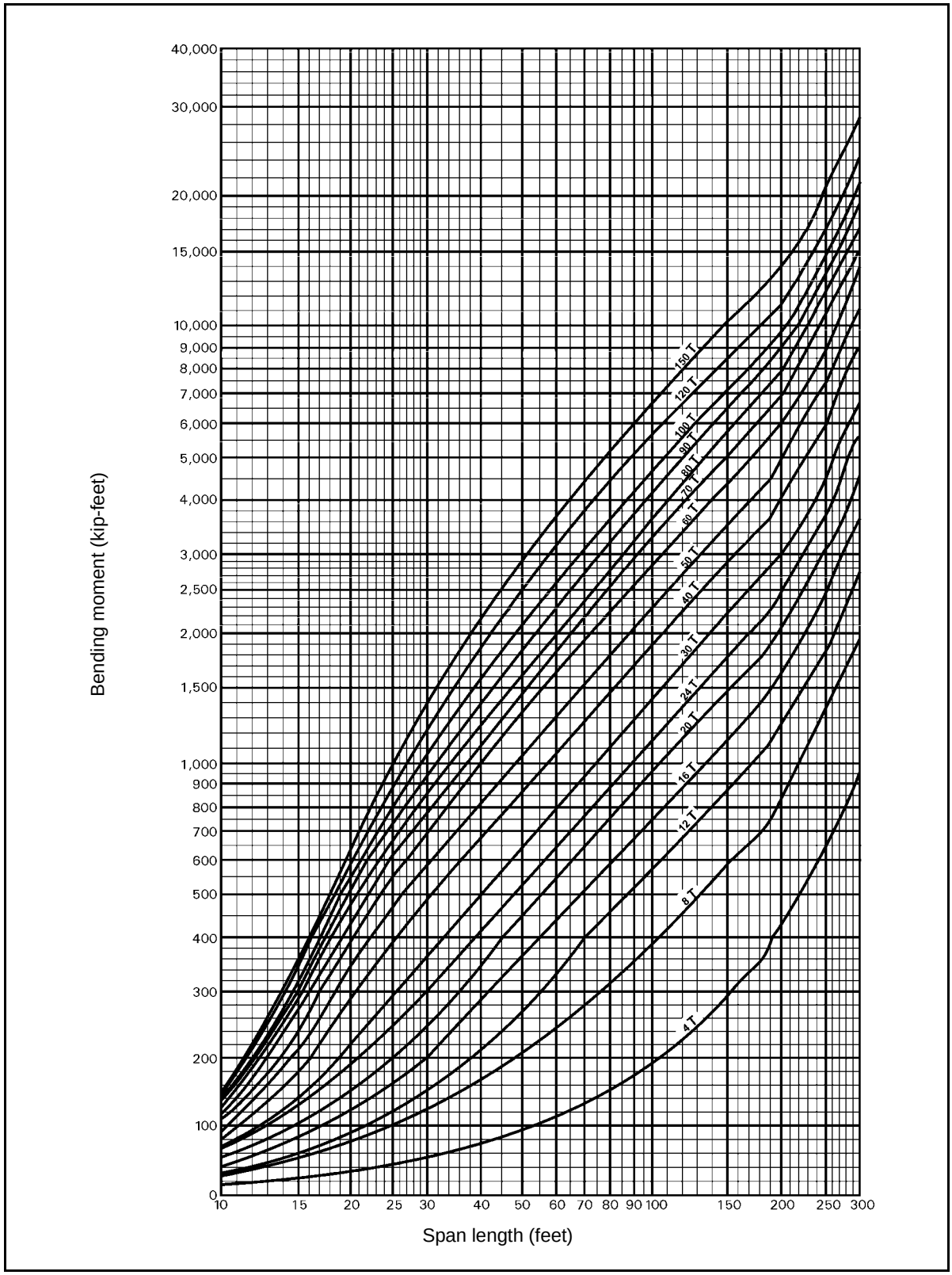

Figure B-2. Tracked Bending Moment

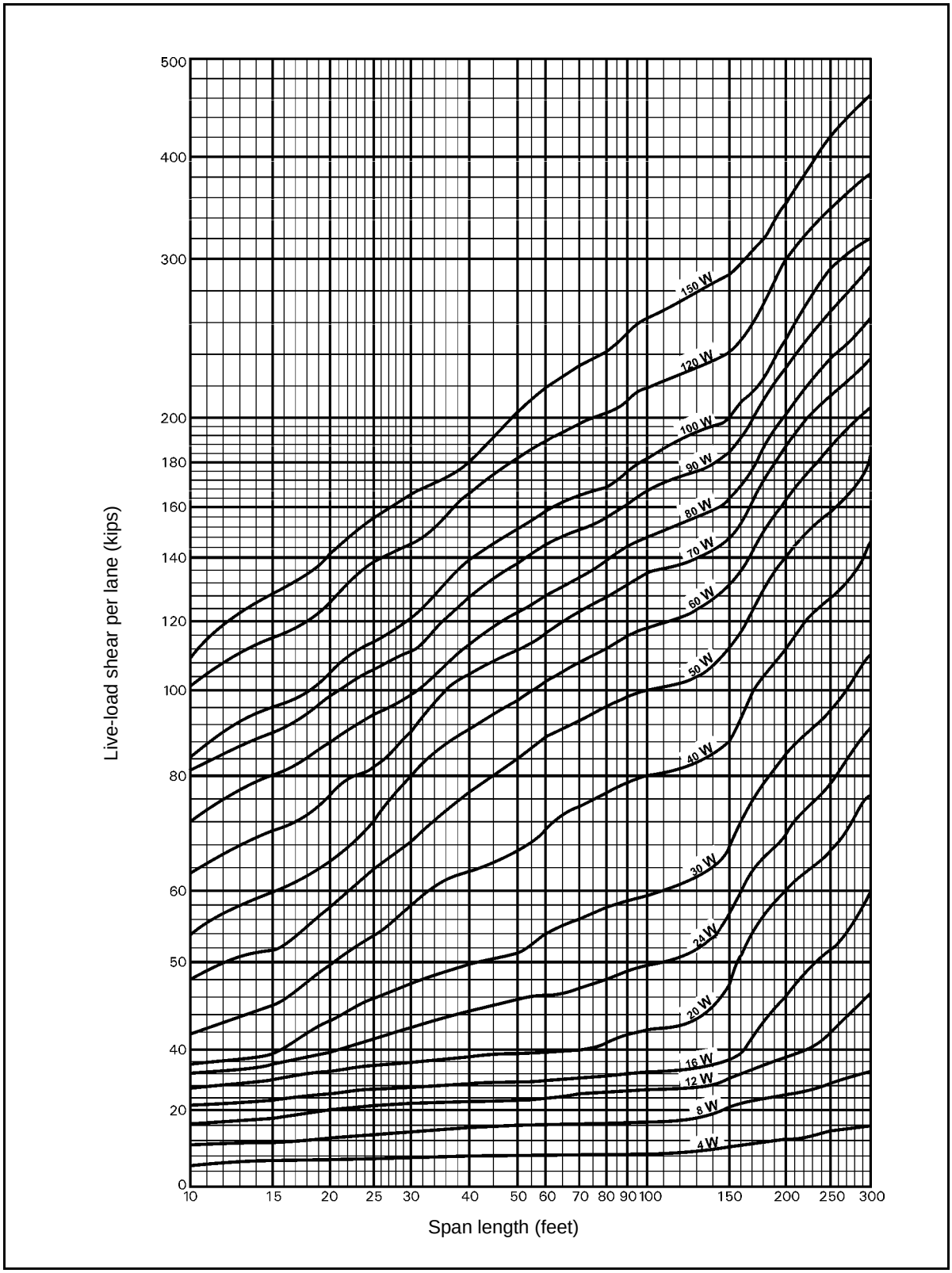

Figure B-3. Wheeled Shear

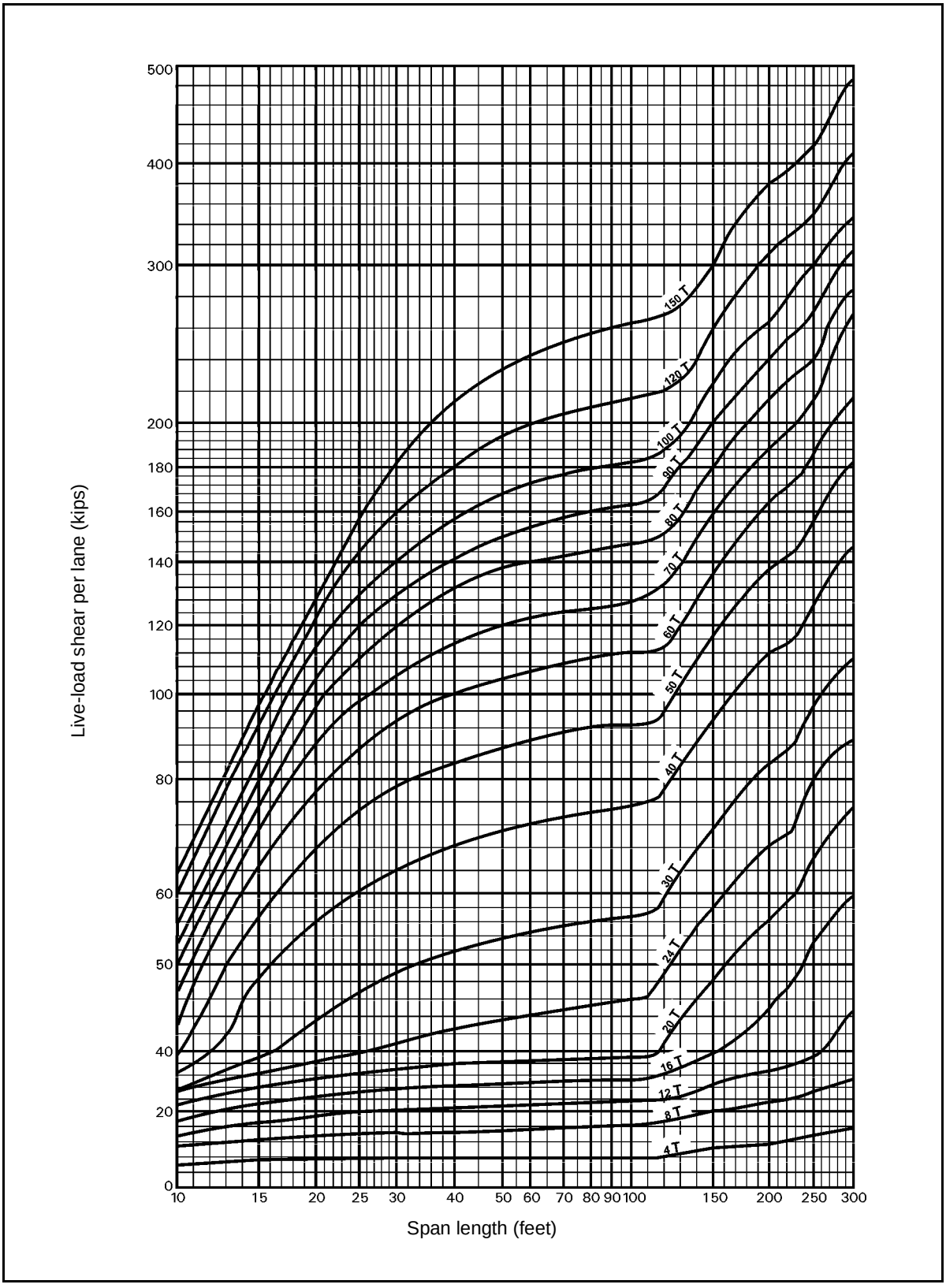

Figure B-4. Tracked Shear

B-6. As a wheeled vehicle moves over a span, the wheel loads are fixed in position relative to each other (they travel over the span as a group). For this type of loading, determine which position produces the largest moment. For maximum moment, the vehicle's center of gravity and the wheel nearest the center of gravity must be equal distances from the center of the span. Follow these steps to classify a given vehicle:

Step 1. Compute the maximum moment (in kip-feet) produced by the vehicle on each of five or six simple spans of different lengths between 10 and 300 feet.

Step 2. Use *Figure B-1, page B-15,* to plot the moment and span length of a wheeled vehicle, and use *Figure B-2, page B-16,* to plot the moment and span length of a tracked vehicle. Assign a class number by interpolating between the curves at the point where the class number is the largest.

Step 3. Compute and plot the shear points on the curves in *Figure B-3, page B-17,* or *Figure B-4.* Assign a new class number if the class is higher because of the shear.

Step 4. Use *Table B-1, pages B-2* through *B-5,* to compute the hypothetical width by linear interpolation between standard hypothetical vehicles.

Step 5. Compare the actual and the hypothetical widths. Then increase or decrease the class number by the percentage given in *Figure B-5.*

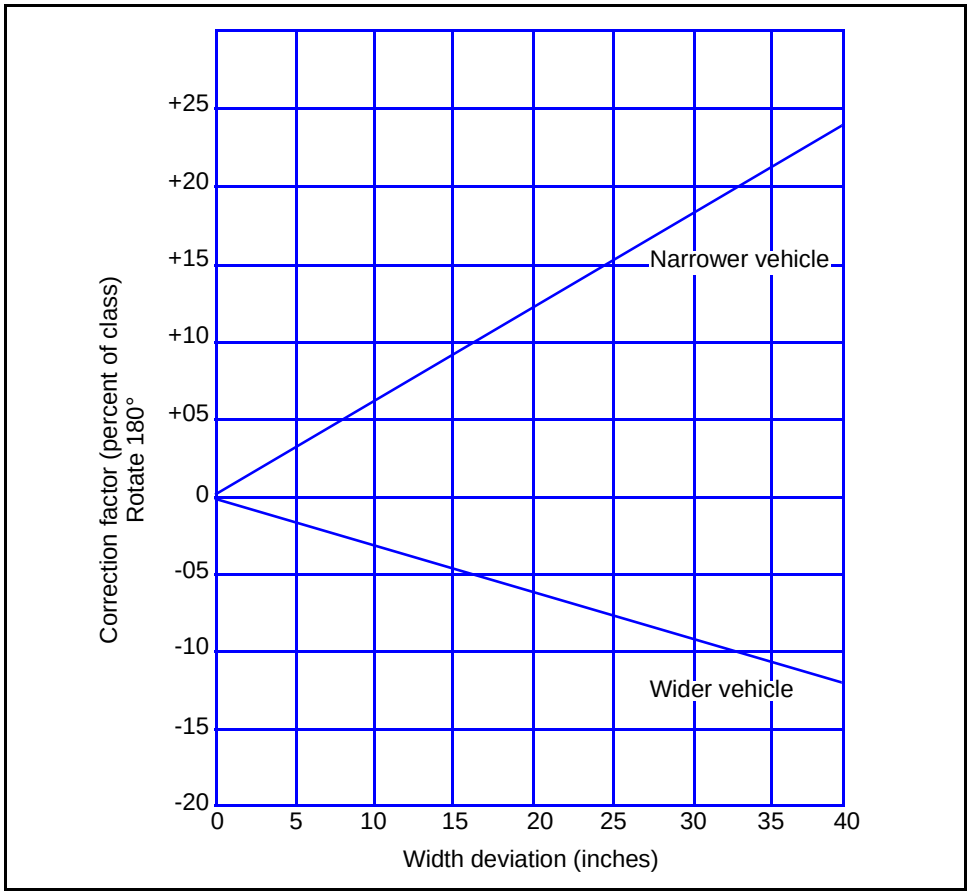

Figure B-5. Width Correction Factor

B-7. Increase the classification if the vehicle's outside-to-outside track or tire width is narrower than the corresponding hypothetical vehicle. Decrease the classification if the vehicle's outside-to-outside width is wider than the corresponding hypothetical vehicle. The maximum axle or tire load of the vehicle may exceed that given in the hypothetical vehicle chart *(Table B-1, pages B-2* through *B-5)*. If it does, increase the class to that of the hypothetical vehicle of the same maximum axle or tire load, interpolating between the values in the chart if necessary. Round the final classification up to the nearest whole number.

EXPEDIENT CLASSIFICATION PROCEDURE

B-8. Use expedient methods to classify vehicles in an emergency. To obtain a permanent classification, however, reclassify by using the analytical method as soon as possible. *FM 5-170* provides guidance for this purpose.

VEHICLE-CLASSIFICATION SIGNS

B-9. Vehicles are divided into two categories for classification purposes–single and combination.

SINGLE VEHICLES

B-10. A single vehicle has only one frame or chassis *(Figure B-6)*. Examples are trucks, tanks, trailers, and gun carriages. Single vehicles are assigned a class number that is rounded up to the nearest whole number. All vehicles except trailers have front signs to show their classifications when loaded to the rated capacity. For unloaded or overloaded vehicles, adjust the front sign to show the actual load classification.

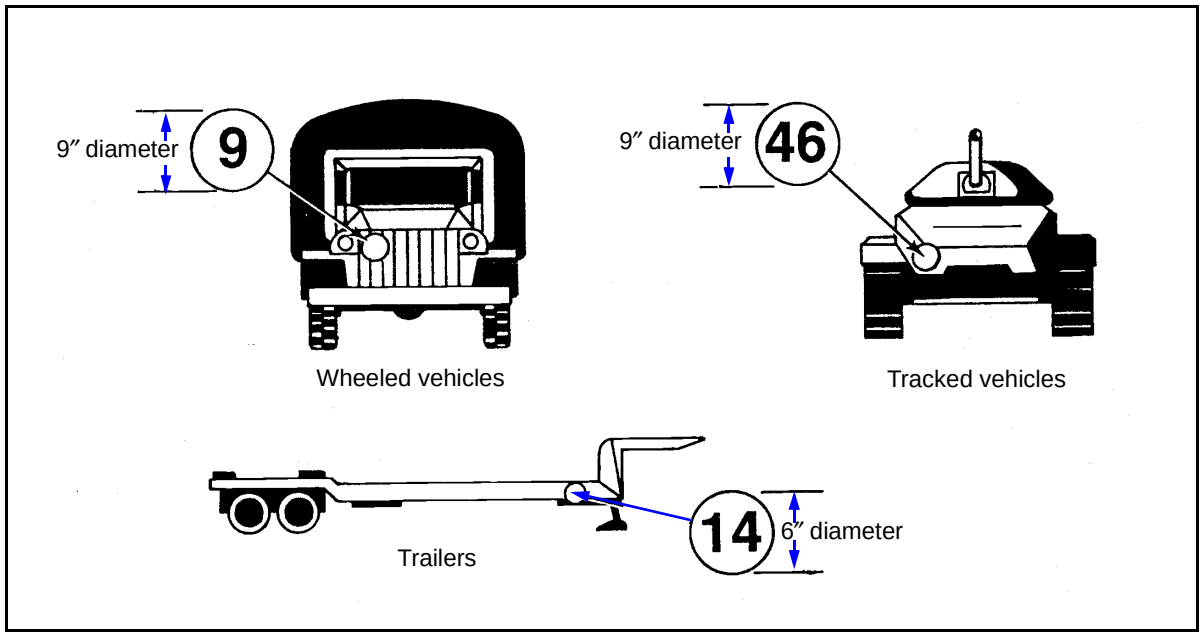

Figure B-6. Classification Markings for Single Vehicles

COMBINATION VEHICLES

B-11. A combination vehicle is two or more single vehicles operating as one unit (such as prime movers pulling semitrailers). One vehicle towing another less than 100 feet behind is also a combination vehicle (nonstandard). The sign on the front of the combination vehicle (towing vehicle or prime mover) has the letter "C" above the classification number of the combination *(Figure B-7)*.

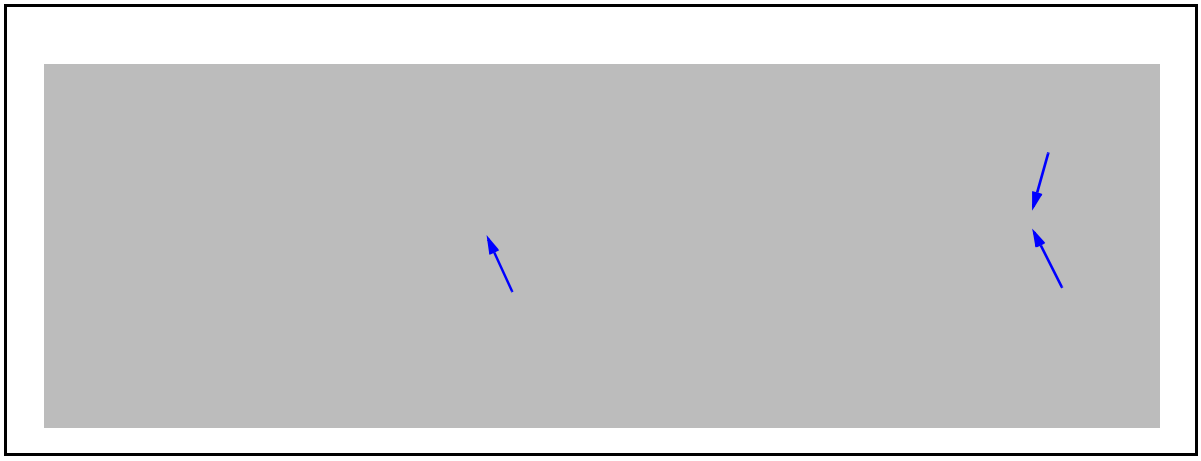

Figure B-7. Classification Markings of Nonstandard Combination Vehicles

SHAPE, COLOR, AND SIZE

B-12. The front and the side signs are circular and are marked in contrasting colors consistent with camouflage requirements. Black figures on a yellow background are normally used. The front signs are 9 inches in diameter, and the side signs are 6 inches in diameter. The figures should be as large as the sign allows.

LOCATION

B-13. Place or paint the front sign on or above the bumper, below the driver's line of vision. When possible, place it on the right front (passenger side) of the vehicle. Place or paint the side signs on the right side of the vehicle facing outward *(Figure B-7)*.

Appendix C

Timber Properties

Timber properties include the timber's strength and grade. Timber remains an important material because it is readily available in much of the world. Also, it is relatively easy to work with when using common tools. As an organic material, the strength properties of timber are influenced by factors such as the species of the tree, the direction of a load, and the size and grade of the lumber. These factors are considered in *Tables C-1* through *C-7, pages C-3* through *C-11*. Other factors that could influence the strength of timber are not covered in this manual.

CIVILIAN-DESIGN STRESS

C-1. *Table C-1* lists recommended civilian-design stresses based on the species, the size, and the grade of the timber members. Use this table for all semipermanent and permanent designs. Use it anytime a significant safety factor is wanted or when conditions allow the accomplishment of the mission using these conservative stress values.

MILITARY-DESIGN STRESS

C-2. *Table C-2* lists allowable loads for expedient and temporary bridges based on timber sizes. Field experience has validated these higher stress values for temporary bridges that are not expected to have a heavy traffic load. Bridges designed or classified using these values should be watched closely for any signs of reduced carrying capacity. These bridges will have much higher maintenance requirements than those designed or classified with more conservative stress values. The data in *Table C-2* is based on the assumption that the beam and stringer members are of select structural grade. Do not use this table if there are any doubts about the grade of timber.

C-3. Any bridge that meets the criteria in *Table C-2* (but is of an unknown species of timber) can be classified based on the allowable stresses recommended in *paragraph 3-47*.

C-4. The allowable stresses depend on the direction of loading of the timber member. *Figure C-1, page C-11,* shows the radial, tangential, and longitudinal directions for the cross section of a log. The radial direction proceeds from what was the center of the tree out to the edge. The tangential direction is parallel (or tangent) to the growth rings of the tree at any particular point.

The longitudinal direction represents the direction of growth for the tree. For example, the longitudinal direction of a tree trunk is up and down. The longitudinal direction is said to be parallel to the grain. The radial and the tangential directions are perpendicular to the grain.

C-5. Another factor that influences the allowable stress is the grade of lumber. Grading of a particular species is done according to the rules of the agency responsible for inspecting commercial timber for that species. Select a structural grade timber that generally has no knots and very few other imperfections, which can reduce strength. Grade No. 1 has no knots, but has slightly more imperfections than select structural grades. Higher grade numbers allow a greater number of knots and imperfections. The higher the grade number the lower the timber quality.

C-6. The grades listed in *Table C-1, pages C-3* through *C-6,* are commercial grades common in the US. Timber members obtained through the AFCS should match one of these specifications. If using native timber, try to locate similar civilian specifications or use the values in *Chapter 3* for timbers of an unknown species. Another alternative is to compare a foreign species to a similar species listed in *Table C-1*. Such a comparison requires extensive experience to ensure that any crucial differences are not overlooked.

Table C-1. Properties of Structural Lumber (Visually Graded)

Commercial Grade	Size	Allowable Unit Stresses (psi)[1]						Modulus of Elasticity (E) (x 1,000)	Grading Agency
		Extreme Fiber in Bending (F_b)		Tension Parallel to the Grain (F_t)	Horizontal Shear (F_v)	Compression (Fc ⊥) Perpendicular to the Grain	Compression ($F_{c\parallel}$) Parallel to the Grain		
		Single-Member Use	Repetitive-Member Use						
Douglas Fir/Larch (Surfaced Dry or Green) (Maximum moisture content is 19 percent.)									
Dense select structural	2 to 4 inches thick and 2 to 4 inches wide	2,450	—	1,400	95	455	1,850	1,900	West Coast Lumber Inspection Bureau and Western Wood Products Association (notes 2 through 9)
Select structural		2,100	—	1,200	95	385	1,600	1,800	
Dense No. 1		2,050	—	1,200	95	455	1,450	1,900	
No. 1		1,750	—	1,050	95	385	1,250	1,800	
Dense No. 2		1,700	—	1,000	95	455	1,150	1,700	
No. 2		1,450	—	850	95	385	1,000	1,700	
No. 3		800	—	475	95	385	600	1,500	
Dense select structural	2 to 4 inches thick and 5 inches or wider	2,100	—	1,400	95	455	1,650	1,900	
Select structural		1,800	—	1,200	95	385	1,400	1,800	
Dense No. 1		1,800	—	1,200	95	455	1,450	1,900	
No. 1		1,500	—	1,000	95	385	1,250	1,800	
Dense No. 2		1,450	—	775	95	455	1,250	1,700	
No. 2		1,250	—	650	95	385	2,050	1,700	
No. 3		725	—	375	95	385	675	1,500	
Dense select structural	Beams and stringers	1,900	—	1,100	85	455	1,300	1,700	West Coast Lumber Inspection Bureau (notes 2 through 9)
Select structural		1,600	—	950	85	385	1,100	1,600	
Dense No. 1		1,550	—	775	85	455	1,100	1,700	
No. 1		1,200	—	825	85	385	1,000	1,600	
Dense select structural	Posts and timbers	1,750	—	1,150	85	455	1,350	1,700	
Select structural		1,500	—	1,000	85	385	1,150	1,600	
Dense No. 1		1,400	—	950	85	455	1,200	1,700	
No. 1		1,200	—	825	85	385	1,000	1,600	
Select dex	Decking	1,750	2,000	—	—	385	—	1,800	
Commercial dex		1,450	1,650	—	—	385	—	1,700	
Dense select structural	Beams and stringers	1,900	—	1,250	85	455	1,300	1,700	Western Wood Products Association (notes 2 through 9)
Select structural		1,600	—	1,050	85	385	1,100	1,600	
Dense No. 1		1,550	—	1,050	85	455	1,100	1,700	
No. 1		1,350	—	900	85	385	925	1,600	
Dense select structural	Posts and timbers	1,750	—	1,150	85	455	1,350	1,700	
Select structural		1,500	—	1,000	85	385	1,150	1,600	
Dense No. 1		1,400	—	950	85	455	1,200	1,700	
Select dex	Decking	—	2,000	—	—	—	—	1,800	
Commercial dex		—	1,650	—	—	—	—	1,700	
Select dex		—	2,150	—	Stresses apply at 15% moisture content			1,800	
Commercial dex		—	1,800	—	—	—	—	1,700	

Table C-1. Properties of Structural Lumber (Visually Graded) (continued)

Commercial Grade	Size	Allowable Unit Stresses (psi)[1]						Modulus of Elasticity (E) (x 1,000)	Grading Agency
		Extreme Fiber in Bending (F_b)		Tension Parallel to the Grain (F_t)	Horizontal Shear (F_v)	Compression (Fc ⊥) Perpendicular to the Grain	Compression (F_c‖) Parallel to the Grain		
		Single-Member Use	Repetitive-Member Use						
Hem-Fir (Surfaced Dry or Green) (Maximum moisture content is 19 percent.)									
Select structural	2 to 4 inches thick and 2 to 4 inches wide	1,650	—	975	75	245	1,300	1,500	West Coast Lumber Inspection Bureau and Western Wood Products Association (notes 2 through 9)
No. 1		1,400	—	825	75	245	1,050	1,500	
No. 2		1,150	—	675	75	245	825	1,400	
No. 3		650	—	375	75	245	500	1,200	
Select structural	2 to 4 inches thick and 5 inches or wider	1,400		950	75	145	1,150	1,500	
No. 1		1,200	—	800	75	245	1,060	1.500	
No. 2		1,000	—	525	75	245	875	1,400	
No. 3		575	—	300	75	245	550	1,200	
Select structural	Beams and stringers	1,300	—	750	70	245	925	1,300	West Coast Lumber Inspection Bureau (notes 2 through 9)
No. 1		1,050	—	525	70	245	750	1,300	
Select structural	Posts and timbers	1,200	—	800	70	245	975	1,300	
No. 1		975	—	650	70	245	850	1,300	
Select dex	Decking	1,400	1,600	—	—	245	—	1,500	
Commercial dex		1,150	1,350	—	—	245	—	1,400	
Select structural	Beams and stringers	1,250	—	850	70	245	925	1,300	Western Wood Products Association (notes 2 through 9)
No. 1		1,050	—	725	70	245	775	1,300	
Select structural	Posts and timbers	1,200	—	800	70	245	975	1,300	
No. 1		950	—	650	70	245	850	1,300	
Select dex	Decking	—	1,600	—	—	—	—	1,500	
Commercial dex		—	1,350	—	—	—	—	1,400	
Select dex		—	1,700	—	Stresses apply at 15% moisture content.			1,600	
Commercial dex		—	1,450	—	—	—	—	1,400	

Table C-1. Properties of Structural Lumber (Visually Graded) (continued)

Commercial Grade	Size	Allowable Unit Stresses (psi)[1]						Modulus of Elasticity (E) (x 1,000)	Grading Agency
		Extreme Fiber in Bending (F_b)		Tension Parallel to the Grain (F_t)	Horizontal Shear (F_v)	Compression (Fc ⊥) Perpendicular to the Grain	Compression ($F_{c\parallel}$) Parallel to the Grain		
		Single-Member Use	Repetitive-Member Use						
Hem-Fir (Surfaced Dry or Green) (Maximum moisture content is 19 percent.) (continued)									
Select structural	2 to 4 inches thick and 2 to 4 inches wide	2,000	—	1,150	100	405	1,550	1,700	Southern Pine Inspection Bureau (notes 2 through 9)
Dense select structural		2,350	—	1,350	100	475	1,800	1,800	
No. 1		1,700	—	1,000	100	405	1,250	1,700	
Dense No. 1		2,000	—	1,150	100	475	1,450	1,800	
No. 2		1,400	—	825	90	405	975	1,600	
Dense No. 2		1,650	—	975	90	475	1,150	1,600	
No. 3		775	—	450	90	405	575	1,400	
Dense No. 3		925	—	525	90	475	675	1,500	
Select structural	2 to 4 inches thick and 5 inches or wider	1,750	—	1,150	90	405	1,350	1,700	
Dense select structural		2,050	—	1,300	90	475	1,600	1,800	
No. 1		1,450	—	975	90	405	1,250	1,700	
Dense No. 1		1,700	—	1,150	90	475	1,450	1,800	
No. 2		1,200	—	625	90	405	1,000	1,600	
Dense No. 2		1,400	—	725	90	475	1,200	1,600	
No. 3		700	—	350	90	405	625	1,400	
Dense No. 3		825	—	425	90	475	725	1,500	
No. 1	5 inches or thicker	1,350	—	875	110	270	775	1,500	
Dense No. 1		1,550	—	1,050	110	315	925	1,600	
No. 2		1,100	—	725	95	270	625	1,400	
Dense No. 2		1,250	—	850	95	315	725	1,400	
Dense standard dex	Decking (2½ to 4 inches thick)	—	1,800	—	—	—	—	1,600	
Select dex		—	1,300	—	—	—	—	1,400	
Dense select dex	Decking (2 inches or wider)	—	1,500	—	—	—	—	1,400	
Commercial dex		—	1,300	—	—	—	—	1,400	
Dense commercial dex	Decking	—	1,500	—	—	—	—	1,400	

NOTES:

1. The allowable unit stresses shown are for selected species and commercial grades. For stresses of other species and commercial grades not shown, the designer is referred to the grading rules of the appropriate grading agency or the National Design Specification for Wood Construction (NDS).

2. The recommended design values given are applicable to lumber that will be used under dry conditions such as in most covered structures. For 2- to 4-inch-thick lumber, the surfaced-dry size should be used. In calculating design values, the natural gain in strength and stiffness that occurs as lumber dries has been taken into consideration as well as the reduction in size that occurs when unseasoned lumber shrinks. The gain in load-carrying capacity due to increased strength and stiffness resulting from drying more than offsets the design effect of size reduction due to shrinkage. For 5-inch and thicker lumber, the surfaced sizes also may be used because design values have been adjusted to compensate for any loss in size by shrinkage, which may occur.

3. Tabulated tension-parallel-to-the-grain values are for all species cut to a width of 5 inches or wider. The 2- to 4-inch-thick size classification applies to 5- and 6-inch widths only for grades of select structural No. 1 through 3 (including dense grades). For lumber wider than 6 inches in these grades, the tabulated F_t values should be multiplied by the following factors:

Grade	Multiply F_t by Appropriate Factor Below		
	5 and 6 Inches Wide	8 Inches Wide	10 Inches and Wider
2 to 4 inches thick and 5 inches or wider (including dense grades)	1.00	0.90	0.80
Select structural No. 1, 2, and 3	1.00	0.80	0.60

Table C-1. Properties of Structural Lumber (Visually Graded) (continued)

4. The values in the table are based on edgewise use. For thicknesses of 2 to 4 inches, when used flatwise, the recommended design values for fiber stress in bending may be multiplied by the following factors:

Width	Thickness		
	2 Inches	3 Inches	4 Inches
2 to 4 inches	1.10	1.04	1.00
5 inches or wider	1.22	1.16	1.11

5. When 2- to 4-inch-thick lumber is manufactured at a maximum moisture content of 15 percent and used in a condition where the moisture content does not exceed 15 percent, the design values given in the table may be multiplied by the following factors (for southern pine, use tabulated design values without adjustment):

Extreme Fiber in Bending (F_b)	Tension Parallel to the Grain (F_t)	Horizontal Shear (F_v)	Compression Perpendicular to the Grain ($F_{c\perp}$)	Compression Parallel to the Grain ($F_{c\parallel}$)	Modulus of Elasticity (E)
1.08	1.08	1.05	1.00	1.17	1.05

6. When 2- to 4-inch-thick lumber is designed for use where the moisture content will exceed 19 percent for an extended period, multiply the design values by the factors given in the following table:

Species	Extreme Fiber in Bending (F_b)	Tension Parallel to the Grain (F_t)	Horizontal Shear (F_v)	Compression Perpendicular to the Grain ($F_{c\perp}$)	Compression Parallel to the Grain ($F_{c\parallel}$)	Modulus of Elasticity (E)
Douglas fir, larch, and hem-fir	0.86	0.84	0.97	0.67	0.70	0.97
Southern pine (2 to 4 inches thick, 5 inches or wider)	0.80	0.80	0.95	0.67	0.66	0.83

7. When lumber 5 inches and thicker is designed for use where the moisture content will exceed 19 percent for an extended period, multiply the values in the table (except those for southern pine) by the following factors:

Extreme Fiber in Bending (F_b)	Tension Parallel to the Grain (F_t)	Horizontal Shear (F_v)	Compression Perpendicular to the Grain ($F_{c\perp}$)	Compression Parallel to the Grain ($F_{c\parallel}$)	Modulus of Elasticity (E)
1.00	1.00	1.00	0.67	0.91	1.00

8. When lumber 4 inches and thinner is manufactured unseasoned, multiply the tabulated values by a factor of 0.92 (except southern pine).

9. Stress-rated boards of nominal thickness (1, 1 1/4, and 1 1/2 inch) and wider dimensions of most species are permitted the recommended design values given for select structural No. 1 through 3 grades as shown for 2- to 4-inch-thick categories when graded according to the stress-board provisions applicable grading rules. Information on stress-rated board grades applicable to the various species is available from the respective grading standards.

Table C-2. Properties of Timber Stringers

Nominal Size (in)	Moment Capacity (m) (kip-feet)[1]	Shear Capacity (v) (kips)[2]	Maximum Span Length (L) (ft)[3]	Nominal Size (in)	Moment Capacity (m) (kip-feet)[1]	Shear Capacity (v) (kips)[2]	Maximum Span Length (L) (ft)[3]
4x8	8.53	3.20	9.50	12x20	160.00	24.00	23.80
4x10*	13.33	4.00	11.90	12x22	193.60	26.40	26.20
4x12*	19.20	4.80	14.30	12x24	230.00	28.80	28.60
6x8	12.80	4.80	79.50	14x14	91.50	19.60	16.70
6x10	20.00	6.00	11.90	14x16	119.50	22.40	19.10
6x12	28.80	7.20	14.30	14x18	151.20	25.20	21.50
6x14*	39.20	8.40	16.70	14x20	186.70	28.00	23.80
6x16*	51.20	9.60	19.10	14x22	226.00	30.80	26.20
6x18*	64.80	10.80	21.50	14x24	269.00	33.60	28.60
8x8	17.07	6.40	79.50	16x16	136.50	25.60	19.10
8x10	26.70	8.00	11.90	16x18	172.80	28.80	21.50
8x12	38.40	9.60	14.30	16x20	213.00	32.00	23.80
8x14	52.30	11.20	16.70	16x22	258.00	35.20	26.20
8x16	68.30	12.80	19.10	16x24	307.00	38.40	28.60
8x18*	86.40	14.40	21.50	18x18	194.40	32.40	21.50
8x20*	106.70	16.40	23.80	18x20	240.00	36.00	23.80
8x22*	129.10	17.60	26.20	18x22	290.00	39.60	26.20
8x24*	153.60	19.20	28.60	18x24	346.00	43.20	28.60
10x10	33.30	10.00	11.90	8θ	10.05	5.70	9.50
10x12	48.00	12.00	14.30	9θ	14.31	7.20	10.70
10x14	65.30	14.00	16.70	10θ	19.63	8.80	11.90
10x16	85.30	16.00	19.10	11θ	26.10	10.60	13.10
10x18	108.00	18.00	21.50	12θ	33.90	12.70	14.30
10x20	133.30	20.00	23.80	13θ	43.10	15.00	15.50
10x22*	161.30	22.00	26.20	14θ	53.90	17.40	16.70
10x24*	192.00	24.00	28.60	16θ	80.40	22.60	19.10
12x12	57.60	14.40	14.30	18θ	114.50	28.60	21.50
12x14	78.40	16.80	16.70	20θ	157.10	35.40	23.80
12x16	102.40	19.20	19.10	22θ	209.00	42.70	26.20
12x18	129.60	21.60	21.50	24θ	271.00	50.80	28.60

NOTES:

1. To determine the moment capacity for a stringer not listed, compute as follows:

Rectangular: $m = \frac{bd^2}{30}$

Round: $m = 0.02D^3$

2. To determine the shear capacity for a stringer not listed, compute as follows:

Rectangular: $v = \frac{bd}{10}$

Round: $v = 0.09D^2$

3. To determine the maximum length for a stringer not listed, compute as follows:

$L = 1.19d$

where—

b = stringer width, in inches
d = stringer depth, in inches
D = diameter
L = maximum span length
m = moment capacity
v = shear capacity

** Lateral bracing required at midspan and span ends.*

Table C-3. Post and Pile Data

Post Size (in)	Post Capacity (kips)[1]	Maximum Height (ft)	Pile Size (in)	Pile Capacity (kips)[2]	Maximum Height (ft)
6x6	18	15	8	25	18
6x8	24	15	9	32	20
8x8	32	20	10	47	25
8x10	40	20	11	47	25
10x10	50	25	12	56	27
10x12	60	25	13	66	29
12x12	72	30	14	76	31

NOTES:

1. For posts not listed, compute as follows:

$\frac{cap}{post} = 0.5A_p$ (A_p = bd, in inches^2)

maximum height = 30b (b in feet)

where—

A_p = *plate area, in inches*
b = *beam width*
d = *stringer depth*

2. For piles not listed, compute as follows:

$\frac{cap}{pile} = 0.39D^2$ (*D in inches*)

maximum height = 27D (D in feet)

where—

D = *pile diameter*

Table C-4. Properties of Rectangular Beams

Width (in)	Depth (in)									
	6	**8**	**10**	**12**	**14**	**16**	**18**	**20**	**22**	**24**
4	24	43	67	96	131	171	216	267	323	384
	16	21	27	32	37	43	48	53	59	64
6	36	64	100	144	196	256	324	400	484	576
	24	32	40	48	56	64	72	80	88	96
8	48	85	133	192	261	341	432	533	645	768
	32	43	53	64	75	85	96	107	117	128
10	60	107	167	240	327	427	540	667	807	960
	40	53	67	80	93	107	120	133	147	160
12	72	128	200	288	392	512	648	800	968	1,152
	48	64	80	96	112	128	144	160	176	192
14	84	149	233	336	457	597	756	933	1,129	1,344
	56	75	93	112	131	149	168	187	205	224
16	96	171	267	384	523	683	864	1,067	1,291	1,536
	64	85	107	128	149	171	192	213	235	256
18	108	192	300	432	588	768	972	1,200	1,452	1,728
	72	96	120	144	168	192	216	240	264	288

NOTES:

1. The top number is the section modulus.

$S = \frac{bd^2}{6}$ **in cubic inches**

2. The bottom number is the effective shear area.

$A_v = \frac{2}{3}bd$ **in square inches**

where—

S *= section modulus of the member*

b *= beam width*

d *= beam depth*

A_v *= effective shear area of the stringer*

Table C-5. Properties of Round Beams

	Diameter (D) (in)													
	6	7	8	9	10	11	12	13	14	16	18	20	22	24
Section modulus (S): $S = \frac{\pi D^3}{32}$	21.00	34.00	50.00	72.00	98.00	131.00	170.00	216.00	270.00	402.00	572.00	785.00	1,045.00	1,358.00
Effective shear area (A_v): $A_v = \frac{3\pi D^2}{16}$	21.00	29.00	38.00	48.00	59.00	71.00	85.00	100.00	116.00	151.00	191.00	236.00	285.00	359.00
Area (A) (in^2): $A = \frac{\pi D^2}{4}$	28.30	38.50	50.30	63.60	78.50	95.00	113.00	132.70	153.90	201.10	254.50	314.20	380.10	452.40
Area (ft^2): $A = \frac{\pi D^2}{4}$	0.20	0.27	0.35	0.44	0.55	0.66	0.79	0.92	1.07	1.40	1.77	2.18	2.65	3.14

Table C-6. Timber Weights and Specific Gravities

Species	Weight (lb per ft^3)	Specific Gravity
Ash (white and red)	40	0.62 to 0.65
Cedar (white and red)	22	0.32 to 0.38
Chestnut	41	0.66
Cypress	30	0.48
Elm (white)	45	0.72
Fir (Douglas spruce)	32	0.51
Fir (eastern)	25	0.40
Hemlock	29	0.42 to 0.52
Hickory	49	0.74 to 0.84
Locust	46	0.73
Maple (hard)	43	0.68
Maple (white)	33	0.53
Oak (chestnut)	54	0.86
Oak (live)	59	0.95
Oak (red and black)	41	0.65
Oak (white)	46	0.74
Pine (Oregon)	32	0.51
Pine (red)	30	0.48
Pine (white)	26	0.41
Pine (yellow, long-leaf)	44	0.70
Pine (yellow, short-leaf)	38	0.61
Poplar	30	0.48
Redwood (California)	26	0.42
Spruce (white and black)	27	0.40 to 0.46
Walnut (black)	38	0.61
Walnut (white)	26	0.41

Table C-7. Effective Length Factors for Columns

	(a)	(b)	(c)	(d)	(e)	(f)
Column shape (buckled shape shown by dashed line)	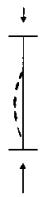	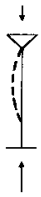	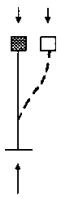	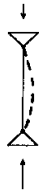		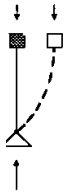
Effective length factor (K) (theoretical value)	0.50	0.70	1.00	1.00	2.00	2.00
Design value of K*	0.65	0.80	1.20	1.00	2.10	2.00
End-condition code	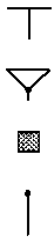	Rotation fixed, translation fixed Rotation free, translation fixed Rotation fixed, translation free Rotation free, translation free				

***When ideal conditions are approximate. For riveted and bolted truss members (partially restrained), *K = 0.75*. For pinned connections in truss members, *K = 0.875* (pin friction).**

Excerpted from the *Standard Specifications for Highway Bridges,* by The American Association of State Highway and Transportation Officials, Washington, DC., Copyright 1996. Note that some of this material may have been superseded by more recent material. Used by permission.

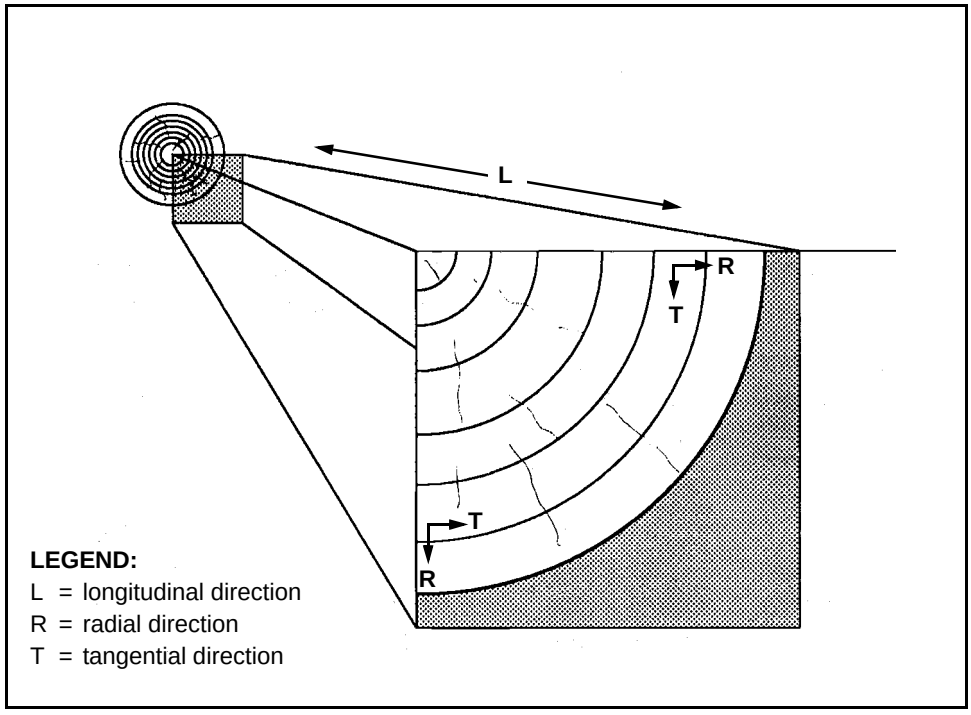

Figure C-1. Log Cross Section

Appendix D

Steel Properties

Steel is a high-strength material made of a combination of iron (with a small percentage [usually less than 1 percent] of carbon) and trace percentages of some other elements. Steel has been made for thousands of years, but an economical process for mass production was not developed until the 1800s. Steel's high strength and relatively low weight makes it extremely desirable as a construction material.

ALL-PURPOSE STEEL

D-1. Different grades of steel are available for constructing bridges and buildings. Each has advantages and disadvantages when compared to the type of construction desired. A36 steel is an all-purpose carbon-grade steel. It is widely used in building and bridge construction.

HIGH-STRENGTH, LOW-ALLOY STEEL

D-2. High-strength steels may be used where lighter, stronger members are required. High-strength steels are necessary as a member becomes smaller because of instability, local buckling, deflection, and other similar failures. High-strength steel is frequently used in tension members, in beams of continuous and composite construction where deflection is minimized, and in columns having low slenderness ratios. The following steels are in this category:

- **ASTM A529 structural carbon steel.** These steels have a yield strength of 42 ksi. Their other properties are similar to A36 steel.
- **ASTM A441 and A572 structural steels.** These steels provide yield strengths from 40 to 65 ksi. Some types may be more brittle than A36 steel.
- **ASTM A242 and A588 atmospheric-corrosion-resistant steels.** These steels are suitable for use in a bare (unpainted) condition. Exposure to normal atmospheric conditions cause a tightly adherent oxide (rust) to form on the surface that protects the steel from further, more destructive oxidation. The reduction of maintenance expense for these steels may offset their higher initial cost during peacetime construction.

QUENCH- AND TEMPERED-ALLOY STEEL

D-3. ASTM A514 steel is an example of this type of steel. It provides yield strengths in excess of 90 ksi. As with all high-strength steels, cost is a crucial factor in deciding whether to use them.

STEEL STRENGTHS

D-4. If the type of steel is unknown, use A36 specifications with a minimum yield strength of 36 ksi. If in doubt about the strength of the steel, always use the weakest-strength steel for classification and design purposes.

STRUCTURAL SHAPES

D-5. *Table D-1* lists the standard steel-plate thicknesses, and *Tables D-2* through *D-10, pages D-3* through *D-11*, list the section properties for the most common structural shapes available in the US. I-beams come in two different shapes—wide-flange (W-shaped) and American-standard (S-shaped). W-shaped beams have essentially parallel flange surfaces and are the most common shape used in bridge construction. W-shaped beams are most economical when moment controls the design of a span. S-shaped beams have flanges that are sloped toward the edges and have a larger web area than W-shaped beams. S-shaped beams are more economical when shear controls the design of a span. Steel channels (C-shaped beams) have the same characteristics as the S-shaped beams and are usually used for lateral bracing and as truss-chord components. Equal-leg and unequal-leg angles (L-shaped beams) are also used as lightweight bracing materials. Bearing piles (HP-shaped beams) are used in substructures to provide support for the bridge.

Table D-1. American Institute of Steel Construction (AISC) Plate Thicknesses

Standard Steel-Plate Thicknesses
1/32-inch increments up to 1/2 inch
1/16-inch increments over 1/2 to 1 inch
1/8-inch increments over 1 to 3 inches
1/4-inch increments over 3 inches

Table D-2. Section Properties of Rolled Beams

Nominal Size	Actual Depth (d)	Flange		Web Thickness (t_w)	Section Modulus[3] (S^3)	Unbraced Length (L_m)	Effective Shear Area[2]
		Width (b)	Thickness (t_f)				
Wide-Flange I-Beams (in)							
W36x300	36.72	16.655	1.680	0.945	1,105.1	25.2	31.50
W36x280	36.50	16.595	1.570	0.889	1,031.0	23.6	29.60
W36x260	36.24	16.555	1.440	0.845	951.1	21.7	28.20
W36x245	36.06	16.912	1.350	0.802	892.5	20.4	27.00
W36x230	35.88	16.475	1.260	0.765	835.5	19.1	25.80
W36x194	36.48	12.117	1.260	0.770	663.6	13.8	26.10
W36x182	36.32	12.072	1.180	0.725	621.2	12.9	24.60
W36x170	36.16	12.027	1.100	0.680	579.1	12.1	23.10
W36x160	36.00	12.000	1.020	0.653	541.0	11.2	22.20
W36x150	35.84	11.972	0.940	0.625	502.9	10.3	21.20
W33x200	33.00	15.750	1.150	0.715	669.6	18.1	21.90
W33x141	33.31	11.535	0.960	0.605	446.8	11.0	19.00
W33x130	33.10	11.510	0.855	0.580	404.8	9.8	18.20
W30x124	30.16	10.521	0.930	0.585	354.6	10.7	16.55
W30x116	30.00	10.500	0.850	0.564	327.9	9.8	15.95
W30x108	29.82	10.484	0.760	0.548	299.2	8.8	15.50
W27x102	27.07	10.018	0.827	0.518	266.3	10.1	13.17
W27x94	26.91	9.990	0.747	0.490	242.8	9.1	12.46
W24x100	24.00	12.000	0.775	0.468	248.9	12.8	10.51
W24x94	24.29	9.061	0.872	0.516	220.9	10.7	11.64
W24x84	24.09	9.015	0.772	0.470	196.3	9.5	10.60
W24x76	23.91	8.985	0.682	0.440	175.4	8.4	9.93
W21x73	21.24	8.295	0.740	0.455	150.7	9.5	9.00
W21x68	21.13	8.270	0.685	0.430	139.9	8.8	8.50
W21x62	20.99	8.240	0.615	0.400	126.4	7.9	7.90
W18x60	18.25	7.558	0.695	0.416	107.8	9.4	7.00
W18x55	18.12	7.532	0.630	0.390	98.2	8.6	6.57
W18x50	18.00	7.500	0.570	0.358	89.0	7.8	6.03
W16x50	16.25	7.073	0.628	0.380	80.7	9.0	5.70
W16x45	16.12	7.039	0.563	0.346	72.4	8.1	5.18
W16x40	16.00	7.000	0.503	0.307	64.4	7.3	4.60
W16x36	15.85	6.992	0.428	0.299	56.3	6.2	4.48
W14x34	14.00	6.750	0.453	0.287	48.5	7.2	3.76
W14x30	13.86	6.733	0.383	0.270	41.8	6.1	3.54
W12x27	11.95	6.500	0.400	0.240	34.1	7.1	2.68
W10x25	10.08	5.762	0.430	0.252	26.4	8.1	2.32
W10x21	9.90	5.750	0.340	0.240	21.5	6.9	2.21
W8x20	8.14	5.268	0.378	0.248	17.0	8.1	1.83
W8x17	8.00	5.250	0.308	0.230	14.1	6.6	1.69

Table D-2. Section Properties of Rolled Beams (continued)

Nominal Size	Actual Depth (d)	Flange		Web Thickness (t_w)	Section Modulus^3 (S^3)	Unbraced Length (L_m)	Effective Shear Area^2
		Width (b)	Thickness (t_f)				
Standard-Shaped I-Beams (in)							
S24x120.0	24.00	8.048	1.102	0.798	250.9	12.2	17.39
S24x105.9	24.00	7.875	1.102	0.625	234.3	11.9	13.62
S24x100.0	24.00	7.247	0.871	0.747	197.6	8.6	16.63
S24x90.0	24.00	7.124	0.871	0.624	185.8	8.5	13.89
S24x79.9	24.00	7.000	0.871	0.500	173.9	8.3	11.13
S20x75.0	20.00	6.391	0.789	0.641	126.3	8.3	11.81
S20x65.4	20.00	6.250	0.789	0.500	116.9	8.1	9.21
S18x54.7	18.00	6.000	0.691	0.460	88.4	7.6	7.64
S15x50.0	15.00	5.640	0.622	0.550	64.2	7.7	7.57
S15x42.9	15.00	5.500	0.622	0.410	58.9	7.5	5.64
S12x40.8	12.00	5.250	0.659	0.460	44.8	9.5	4.91
S12x35.0	12.00	5.078	0.544	0.428	37.8	7.6	4.67
S12x31.8	12.00	5.000	0.544	0.350	36.0	7.4	3.82
S10x35.0	10.00	4.944	0.491	0.594	29.2	7.6	5.36
S8x23.0	8.00	4.171	0.425	0.441	16.0	7.3	3.15
S8x18.4	8.00	4.000	0.425	0.270	14.2	7.0	1.93
S7x20.0	7.00	3.860	0.392	0.450	12.0	7.1	2.80
S7x15.3	7.00	3.660	0.392	0.250	10.4	6.7	1.55
S6x17.25	6.00	3.565	0.359	0.465	8.7	7.0	2.46
S6x12.5	6.00	3.330	0.359	0.230	7.3	6.5	1.21

Table D-3. Section Properties of End-Bearing H-Piles (in inches)

Nominal Size	Section Area^2	Section Depth (d)	Flange		Web Thickness (t_w)	Axis x-x			Axis y-y		
			Width (b_f)	Thick-ness (t_f)		M_i^4	S^3	r	M_i^4	S^3	r
HP14x117	34.44	14.23	14.885	0.805	0.805	1,228.5	172.6	5.97	443.1	59.5	3.59
HP14x102	30.01	14.03	14.784	0.704	0.704	1,055.1	150.4	5.93	379.6	51.3	3.56
HP14x89	26.19	13.86	14.696	0.616	0.616	909.1	131.2	5.89	326.2	44.4	3.53
HP14x73	21.46	13.64	14.586	0.506	0.506	733.1	107.5	5.85	261.9	35.9	3.49
HP12x74	21.76	12.12	12.217	0.607	0.607	566.5	93.5	5.10	184.7	30.2	2.91
HP12x53	15.58	11.78	12.046	0.436	0.436	394.8	67.0	5.03	127.3	21.2	2.86
HP10x57	16.76	10.01	10.224	0.564	0.564	294.7	58.9	4.19	100.6	19.7	2.45
HP10x42	12.35	9.72	10.078	0.418	0.418	210.8	43.4	4.13	71.4	14.2	2.40
HP8x36	10.60	8.03	8.158	0.446	0.446	119.8	29.9	3.36	40.4	9.9	1.95

LEGEND:

M_i = moment of inertia
S = section modulus
r = radius of gyration

Table D-4. Section Properties of Rolled Channels

Nominal Size (in)	Weight per Foot (lb)	Actual Depth (d) (in)	Flange (in)		Web Thickness (t_w) (in)	Section Modulus[3] (S^3) (in)
			Width (b)	Thickness (t_f)		
18	58.00	18	4.200	0.625	0.700	74.5
	42.70	18	3.950	0.625	0.450	61.0
15	50.00	15	3.716	0.650	0.716	53.6
	33.90	15	3.400	0.650	0.400	41.7
12	30.00	12	3.170	0.501	0.510	26.9
	20.70	12	2.940	0.501	0.280	21.4
10	30.00	10	3.033	0.436	0.673	20.6
	20.00	10	2.739	0.436	0.379	15.7
9	20.00	9	2.648	0.413	0.448	13.5
	13.40	9	2.430	0.413	0.230	10.5
8	18.75	8	2.527	0.390	0.487	10.9
	11.50	8	2.260	0.390	0.220	8.1
7	14.75	7	2.299	0.366	0.419	7.7
	9.80	7	2.090	0.366	0.210	6.0
6	13.00	6	2.157	0.343	0.437	5.8
	8.20	6	1.920	0.343	0.200	4.3
5	6.70	5	1.750	0.320	0.190	3.0
4	5.40	4	1.580	0.296	0.180	1.9
3	4.10	3	1.410	0.273	0.170	1.1

Table D-5. Properties of Reinforcing Bars

Bar Number (see note 1)	Weight per Foot (lb)	Nominal Dimensions (in)		
		D	A_s[2]	Perimeter
2 (see note 2)	0.167	0.250	0.05	0.786
3	0.376	0.375	0.11	1.178
4	0.668	0.500	0.20	1.571
5	1.043	0.625	0.31	1.963
6	1.502	0.750	0.44	2.356
7	2.044	0.875	0.60	2.749
8	2.670	1.000	0.79	3.142
9 (see note 3)	3.400	1.128	1.00	3.544
10 (see note 3)	4.303	1.270	1.27	3.990
11 (see note 3)	5.313	1.410	1.56	4.430

NOTES:

1. Bar numbers are based on the number of eighths of an inch included in the nominal diameter of the bars. The nominal diameter of a deformed bar is equivalent to the diameter of a plain bar having the same weight per foot as the deformed bar.

2. Plain, round 1/4-inch No. 2 bars only.

3. These figures correspond to the former 1-, 1 1/8-, and 1 1/4-inch-square sizes and are equivalent to those former standard bar sizes in weight and nominal cross-sectional area.

LEGEND:

D = diameter
A_S = cross-sectional area of bar, in square inches

Table D-6. Section Properties of Rolled Angles

Nominal Size (in)	Weight per Foot (lb)	Area[2] (in)	Axes x-x and y-y (in)				Axis z-z (in)
			I[4]	S[3]	r	x or y	r
L8x8x1	51.00	15.00	89.00	15.80	2.44	2.37	1.56
L8x8x3/4	38.90	11.44	69.70	12.20	2.47	2.28	1.57
L8x8x1/2	26.40	7.75	48.60	8.40	2.50	2.19	1.59
L6x6x1	37.40	11.00	35.50	8.60	1.80	1.86	1.17
L6x6x3/4	28.70	8.44	28.20	6.70	1.83	1.78	1.17
L6x6x1/2	19.60	5.75	19.90	4.60	1.86	1.68	1.18
L6x6x3/8	14.90	4.36	15.40	3.50	1.88	1.64	1.19
L5x5x3/4	23.60	6.94	15.70	4.50	1.51	1.52	0.97
L5x5x1/2	16.20	4.75	11.30	3.20	1.54	1.43	0.98
L5x5x3/8	12.30	3.61	8.70	2.40	1.56	1.39	0.99
L4x4x3/4	18.50	5.44	7.70	2.80	1.19	1.27	0.78
L4x4x1/2	12.80	3.75	5.60	2.00	1.22	1.18	0.78
L4x4x3/8	9.80	2.86	4.40	1.50	1.23	1.14	0.79
L4x4x1/4	6.60	1.94	3.00	1.10	1.25	1.09	0.80
L3 1/2x3 1/2x1/2	11.10	3.25	3.60	1.50	1.06	1.06	0.68
L3 1/2x3 1/2x3/8	8.50	2.48	2.90	1.20	1.07	1.01	0.69
L3 1/2x3 1/2x1/4	5.80	1.69	2.00	0.79	1.09	0.97	0.69
L3x3x1/2	9.40	2.75	2.20	1.10	0.90	0.93	0.58
L3x3x3/8	7.20	2.11	1.80	0.83	0.91	0.89	0.58
L3x3x1/4	4.90	1.44	1.20	0.58	0.93	0.84	0.59
L2 1/2x2 1/2x1/2	7.70	2.25	1.20	0.72	0.74	0.81	0.49
L2 1/2x2 1/2x3/8	5.90	1.73	0.98	0.57	0.75	0.76	0.49
L2 1/2x2 1/2x1/4	4.10	1.19	0.70	0.39	0.77	0.72	0.49
L2x2x3/8	4.70	1.36	0.48	0.35	0.59	0.64	0.39
L2x2x1/4	3.19	0.94	0.35	0.25	0.61	0.59	0.39

LEGEND:

I = moment of inertia about the x-axis, in inches[4]
S = section modulus
r = radius of gyration

Table D-7. Section Properties of Unequal-Leg Angles

Nominal Size (in)	Weight per Foot (lb)	Area[2] (in)	Axis x-x (in)				Axis y-y (in)				Axis z-z	
			I^4	S^3	r	y	I^4	S^3	r	x	r (in)	tan
L9x4x1	40.8	12.00	97.0	17.60	2.84	3.50	12.0	4.00	1.00	1.00	0.83	0.203
L9x4x3/4	31.3	9.19	76.1	13.60	2.88	3.41	9.6	3.10	1.02	0.91	0.84	0.212
L9x4x1/2	21.3	6.25	53.2	9.30	2.92	3.31	6.9	2.20	1.05	0.81	0.85	0.220
L8x6x1	44.2	13.00	80.8	15.10	2.49	2.65	38.8	8.90	1.73	1.65	1.28	0.543
L8x6x3/4	33.8	9.94	63.4	11.70	2.53	2.56	30.7	6.90	1.76	1.56	1.29	0.551
L8x6x1/2	23.0	6.75	44.3	8.00	2.56	2.47	21.7	4.80	1.79	1.47	1.30	0.558
L8x4x1	37.4	11.00	69.6	14.10	2.52	3.05	11.6	3.90	1.03	1.05	0.85	0.247
L8x4x3/4	28.7	8.44	54.9	10.90	2.55	2.95	9.4	3.10	1.05	0.95	0.85	0.258
L8x4x1/2	19.6	5.75	38.5	7.50	2.59	2.86	6.7	2.20	1.08	0.86	0.86	0.267
L7x4x3/4	26.2	7.69	37.8	8.40	2.22	2.51	9.1	3.00	1.09	1.01	0.86	0.324
L7x4x1/2	17.9	5.25	26.7	5.80	2.25	2.42	6.5	2.10	1.11	0.92	0.87	0.335
L7x4x3/8	13.6	3.98	20.6	4.40	2.27	2.37	5.1	1.60	1.13	0.87	0.88	0.339
L6x4x3/4	23.6	6.94	24.5	6.30	1.88	2.08	8.7	3.00	1.12	1.08	0.86	0.428
L6x4x1/2	16.2	4.75	17.4	4.30	1.91	1.99	6.3	2.10	1.15	0.99	0.87	0.440
L6x4x3/8	12.3	3.61	13.5	3.30	1.93	1.94	4.9	1.60	1.17	0.94	0.88	0.446
L6x3 1/2 x1/2	15.3	4.50	16.6	4.20	1.92	2.08	4.3	1.60	0.97	0.83	0.76	0.344
L6x3 1/2 x3/8	11.7	3.42	12.9	3.20	1.94	2.04	3.3	1.20	0.99	0.79	0.77	0.350
L6x3 1/2 x1/4	7.9	2.31	8.9	2.20	1.96	1.99	2.3	0.85	1.01	0.74	0.78	0.355
L5x3 1/2 x3/4	19.8	5.81	13.9	4.30	1.55	1.75	5.6	2.20	0.98	1.00	0.75	0.464
L5x3 1/2 x1/2	13.6	4.00	10.0	3.00	1.58	1.66	4.1	1.60	1.01	0.91	0.75	0.479
L5x3 1/2 x3/8	10.4	3.05	7.8	2.30	1.60	1.61	3.2	1.20	1.02	0.86	0.76	0.486
L5x3 1/2 x1/4	7.0	2.06	5.4	1.60	1.61	1.56	2.2	0.83	1.04	0.81	0.76	0.492
L5x3x1/2	12.8	3.75	9.5	2.90	1.59	1.75	2.6	1.10	0.83	0.75	0.65	0.357
L5x3x3/8	9.8	2.86	7.4	2.20	1.61	1.70	2.0	0.89	0.84	0.70	0.65	0.364
L5x3x1/4	6.6	1.94	5.1	1.50	1.62	1.66	1.4	0.61	0.86	0.66	0.66	0.371
L4x3 1/2 x1/2	11.9	3.50	5.3	1.90	1.23	1.25	3.8	1.50	1.04	1.00	0.72	0.750
L4x3 1/2 x3/8	9.1	2.67	4.2	1.50	1.25	1.21	3.0	1.20	1.06	0.96	0.73	0.755
L4x3 1/2 x1/4	6.2	1.81	2.9	1.00	1.27	1.16	2.1	0.81	1.07	0.91	0.73	0.759
L4x3x1/2	11.1	3.25	5.1	1.90	1.25	1.33	2.4	1.10	0.86	0.83	0.64	0.543
L4x3x3/8	8.5	2.48	4.0	1.50	1.26	1.28	1.9	0.87	0.88	0.78	0.64	0.551
L4x3x1/4	5.8	1.69	2.8	1.00	1.28	1.24	1.4	0.60	0.90	0.74	0.65	0.558
L3 1/2 x3x1/2	10.2	3.00	3.5	1.50	1.07	1.13	2.3	1.10	0.88	0.88	0.62	0.714
L3 1/2 x3x3/8	7.9	2.30	2.7	1.10	1.09	1.08	1.9	0.85	0.90	0.83	0.62	0.721
L3 1/2 x3x1/4	5.4	1.56	1.9	0.78	1.11	1.04	1.3	0.59	0.91	0.79	0.63	0.727

LEGEND:

I = moment of inertia about the x-axis, in inches^4

S = section modulus

r = radius of gyration

Table D-8. Section Moduli for Composite Steel Stringers

Nominal Size (in)	d (in)	b (in)	S^3 (t_d = 3 in)	S^3 (t_d = 4 in)	S^3 (t_d = 5 in)	S^3 (t_d = 6 in)	S^3 (t_d = 8 in)
W36x300	36.750	16.625	1,105	1,264	1,323	1,380	1,489
W36x230	35.875	16.500	835	972	1,018	1,061	1,145
W36x194	36.500	12.125	663	805	847	887	961
W36x182	36.375	12.125	621	757	796	833	902
W36x170	36.125	12.000	579	709	745	779	844
W36x160	36.000	12.000	541	667	701	733	794
W36x150	35.875	12.000	502	624	656	686	744
W33x220	33.875	15.750	740	868	910	951	1,031
W33x200	33.625	15.750	669	789	828	865	938
W33x141	33.250	11.500	446	555	585	612	666
W33x130	33.125	11.500	404	509	536	561	612
W30x172	30.500	15.000	528	630	663	694	757
W30x124	30.125	10.500	354	449	474	497	546
W30x116	30.000	10.500	327	419	442	464	511
W30x108	29.875	10.500	299	387	409	429	473
W27x161	27.625	14.000	455	537	566	595	655
W27x102	27.125	10.000	267	342	362	381	423
W27x94	26.875	10.000	243	315	333	350	390
W27x84	26.750	10.000	213	279	295	311	347
W24x94	24.250	9.125	222	288	306	323	364
W24x84	24.125	9.000	196	258	274	290	326
W24x76	23.875	9.000	176	233	247	262	295
W21x73	21.250	8.250	151	203	216	231	263
W21x68	21.125	8.250	140	189	202	216	246
W21x62	21.000	8.250	127	172	184	197	224
W18x60	18.250	7.500	108	149	160	173	201
W18x55	18.125	7.500	98	137	147	159	184
W18x50	18.000	7.500	89	124	134	145	168

LEGEND:

b = width
d = depth
S = section modulus
t_d = deck thickness

Table D-9. Effective Length Factors

	(a)	(b)	(c)	(d)	(e)	(f)
Column shape (buckled shape is shown by a dashed line)	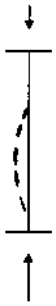					
Effective length factor (K) (theoretical value)	0.50	0.70	1.00	1.00	2.00	2.00
Design value of K*	0.65	0.80	1.20	1.00	2.10	2.00
End-condition code		Rotation fixed, translation fixed Rotation free, translation fixed Rotation fixed, translation free Rotation free, translation free				

***When ideal conditions are approximate. For riveted and bolted truss members (partially restrained), *K= 0.75*. For pinned connections in truss members, *K = 0.875* (pin friction).**

Excerpted from the *Standard Specifications for Highway Bridges,* by The American Association of State Highway and Transportation Officials, Washington, DC, Copyright 1996. Note that some of this material may have been superseded by more recent material. Used by permission.

Table D-10. Properties of Steel Stringers (F_y is 36 ksi and f_b is 29 ksi)

Nominal Size (in)	d (in)	b (in)	t_f (in)	t_w (in)	m (kip-feet)	v (kips)	L_m (ft)	S_b (ft)
W39x211*	39.250	11.750	1.438	0.75	1,901	335	93	19.9
W37x206*	37.250	11.750	1.438	0.75	1,779	335	89	21.0
W36x300	36.750	16.625	1.688	0.94	2,670	410	87	35.3
W36x194	36.500	12.125	1.250	0.81	1,602	340	87	19.2
W36x182	36.375	12.125	1.187	0.75	1,500	320	87	18.3
W36x170	36.125	12.000	1.125	1.06	1,398	300	86	17.3
W36x160	36.000	12.000	1.000	1.06	1,307	288	86	15.4
W36x230	35.875	16.500	1.250	0.75	2,018	332	85	26.6
W36x150	35.875	12.000	0.937	0.62	1,215	276	85	14.5
W36x201*	35.375	11.750	1.438	0.75	1,659	317	84	22.1

Table D-10. Properties of Steel Stringers (F_y is 36 ksi and f_b is 29 ksi) (continued)

Nominal Size (in)	d (in)	b (in)	t_f (in)	t_w (in)	m (kip-feet)	v (kips)	L_m (ft)	S_b (ft)
W33x196*	33.375	11.750	1.438	0.75	1,539	297	79	23.4
W33x220*	33.250	15.750	1.250	0.81	1,784	309	79	27.4
W33x141	33.250	11.500	0.937	0.62	1,079	247	79	15.0
W33x200	33.000	15.750	1.125	0.56	978	236	79	14.1
W31x180	31.500	11.750	1.312	0.75	1,618	285	79	24.9
W30x124	30.125	10.500	0.937	0.68	1,425	258	75	22.7
W30x116	30.000	10.500	0.875	0.62	856	215	72	15.1
W30x108	29.875	10.500	0.750	0.56	793	207	71	14.2
W30x175*	29.500	11.750	1.312	0.56	723	201	71	12.2
W27x171*	27.500	11.750	1.312	0.68	1,242	240	70	24.2
W27x102	27.125	10.000	0.812	0.68	1,137	222	65	26.0
W27x94	26.875	10.000	0.750	0.50	643	171	65	13.9
W26x157*	25.500	11.750	1.250	0.50	586	162	64	12.9
W24x94	24.250	9.000	0.875	0.62	983	187	61	26.7
W24x84	24.125	9.000	0.750	0.50	534	150	58	15.0
W24x100	24.000	12.000	0.750	0.50	475	137	57	12.4
S24x120	24.000	8.000	1.125	0.50	601	136	57	17.4
S24x106	24.000	7.875	1.125	1.18	606	225	57	17.4
S24x80	24.000	7.000	0.875	0.62	566	176	57	17.1
W24x76	23.875	9.000	0.687	0.50	420	144	57	11.8
W24x153*	23.625	11.750	0.250	0.43	423	128	57	12.0
S24x134*	23.625	8.500	1.250	0.62	889	171	26	28.8
S22x75*	22.000	7.000	0.812	0.81	681	223	26	20.8
W21x139*	21.625	11.750	1.187	0.50	331	132	52	12.0
S21x112*	21.625	7.875	1.187	0.62	751	156	52	30.0
W21x73	21.250	8.250	0.750	0.75	532	188	52	20.0
W21x68	21.125	8.250	0.687	0.50	363	117	51	13.5
W21x62	21.000	8.250	0.625	0.43	338	110	50	12.4
S20x85	20.000	7.125	0.937	0.37	305	102	50	11.4
S21x65*	20.000	6.500	0.812	0.68	362	154	48	15.5
W20x134*	19.625	11.750	1.187	0.43	263	104	48	12.2
W18x60	18.250	7.500	0.687	0.62	667	139	47	32.9
S18x86*	18.250	7.000	1.000	0.43	261	91	43	13.1
S18x55	18.125	7.500	0.625	0.37	236	85	43	12.0
S18x80*	18.000	8.000	0.937	0.50	314	104	43	19.3
W18x50	18.000	7.500	0.562	0.37	215	78	43	10.9
S18x55	18.000	6.000	0.687	0.50	214	99	43	10.6
S18x122*	17.750	11.750	1.062	0.56	696	114	42	32.6
S18x62*	17.750	6.875	0.750	0.37	256	79	42	3.4
S18x77*	17.750	6.625	0.937	0.62	302	128	42	16.2
W16x112*	16.750	11.750	1.000	0.56	483	107	40	32.5
S16x70*	16.750	6.500	0.937	0.62	256	115	40	16.8
W16x50	16.250	7.125	0.625	0.37	194	74	39	12.7
W16x45	16.125	7.000	0.562	0.37	175	67	38	1.3

Table D-10. Properties of Steel Stringers (F_y is 36 ksi and f_b is 29 ksi) (continued)

Nominal Size (in)	d (in)	b (in)	t_f (in)	t_w (in)	m (kip-feet)	v (kips)	L_m (ft)	S_b (ft)
W16x64	16.000	8.500	0.687	0.43	251	84	38	16.9
W16x40	16.000	7.000	0.500	0.31	156	59	38	10.1
S16x50*	16.000	6.000	0.687	0.43	166	83	38	11.9
W16x36	15.875	7.000	0.437	0.31	136	58	38	8.9
W16x110*	15.750	11.750	1.000	0.56	371	100	37	34.5
S16x62*	15.750	6.125	0.875	0.56	215	101	37	15.8
S16x45*	15.750	5.375	0.625	0.43	161	82	37	9.9
W15x103*	15.000	11.750	0.937	0.56	396	95	36	34.0
S15x56	15.000	5.875	0.812	0.50	186	87	36	14.7
S15x43	15.000	5.500	0.625	0.43	142	73	36	0.6
W14x101*	14.250	11.750	0.937	0.56	369	90	34	35.8
S14x40*	14.250	5.375	0.375	0.37	128	65	34	6.5
S14x51*	14.125	5.625	0.750	0.50	161	82	34	13.8
S14x70*	14.000	8.000	0.937	0.43	219	69	33	24.8
S14x57*	14.000	6.000	0.875	0.50	164	80	33	17.4
W14x34	14.000	6.750	0.437	0.31	117	48	33	9.8
W14x30	13.875	6.750	0.375	0.25	101	46	33	8.4
W14x92*	13.375	11.750	0.875	0.50	319	76	32	35.6
S14x46*	13.375	5.375	0.687	0.50	135	78	32	12.8
S13x35*	13.000	5.000	0.625	0.37	91	57	31	11.1
S13x41*	12.625	5.125	0.687	0.56	116	82	30	12.9
W12x36	12.250	6.625	0.562	0.31	111	44	29	14.1
S12x65*	12.000	8.000	0.937	0.43	195	58	29	28.9
W12x57	12.000	6.500	0.375	1.25	82	35	29	9.4
S12x50	12.000	5.500	0.687	0.68	121	96	29	14.6
S12x32	12.000	5.000	0.562	0.37	87	49	29	10.9
S12x34*	11.250	4.750	0.625	0.43	87	57	27	13.5
W11x76*	11.000	11.000	0.812	0.50	217	61	26	37.6
S10x29*	10.625	4.750	0.562	0.31	72	38	25	10.4
W10x25	10.125	5.750	0.437	0.25	63	30	24	10.5
S10x40	10.000	6.000	0.687	0.37	99	42	24	19.1
S10x35	10.000	5.000	0.500	0.62	70	69	24	11.6

***Available in Europe; not a standard US shape.**

LEGEND:

b = width
d = depth
L_m = maximum span length
m = moment capacity
S_b = brace spacing
t_f = flange thickness
t_w = web thickness
v = shear capacity

UNLISTED-BEAMS SECTION PROPERTIES

D-6. *Tables D-2, D-3, D-4, D-6,* and *D-7, pages D-3* through *D-7,* do not list the section properties for all beam types. These properties can be determined by using the external dimensions of the unlisted beams and calculating each of the section properties. Important properties to consider include the—

- Effective shear area.
- Neutral axis.
- Moment of inertia.
- Section modulus.
- Radius of gyration.

EFFECTIVE SHEAR AREA

D-7. Compute the effective shear area as follows:

$$A_v = t_w d_i \quad \text{(D-1)}$$

where—

A_v = *effective shear area, in square inches*
t_w = *web thickness, in inches*
d_i = *internal flange depth, in inches. Measure this distance from the inside of the top flange to the inside of the bottom flange.*

NEUTRAL AXIS

D-8. The neutral axis is the plane that splits the area of a shape in half. The beam is unaffected by compression or tension along this axis. There is no stress in the beam along this axis. Determine the location of the neutral axis as follows:

- **Simple shapes (squares, rectangles, triangles, and circles).** Divide the depth of the shape by two or three, as appropriate *(Figure D-1).*
- **Symmetrical, complex shapes.** Divide the depth of the member by two *(Figure D-2).*
- **Unsymmetrical, complex shapes.** Use the following procedure:
  - Divide the complex shape into simple shapes and determine the location of the neutral axes in these sections *(Figure D-3, page D-14).*
  - Find the distance from an arbitrary baseline (normally the bottom of the complex shape) to the neutral axis of each of the simple shapes *(Figure D-4, page D-14).*
  - Determine the area of each of the simple shapes *(Figure D-5, page D-14).*
  - Determine the distance from the baseline to the neutral axis of the complex shape by using *Figure D-6, page D-15,* and the following equation:

$$y = \frac{\Sigma A\bar{y}}{\Sigma A} \qquad \text{(D-2)}$$

where—

y = *distance from the baseline to the neutral axis of the complex shape, in inches*

A = *area of the simple shape, in square inches*

$\bar{y}$ = *distance from the baseline to the neutral axis of the simple shape, in inches*

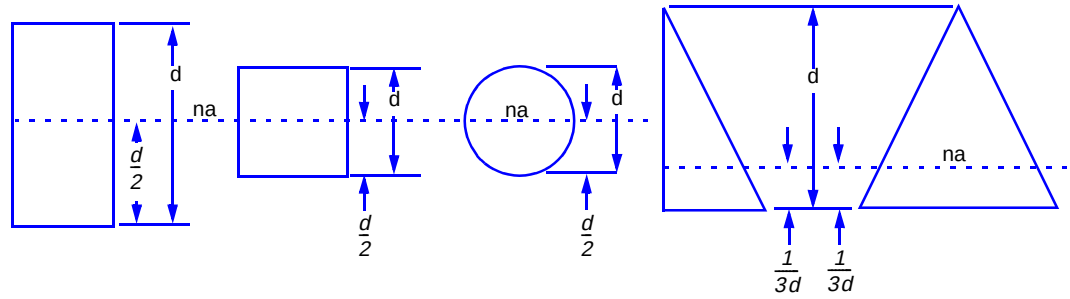

LEGEND:
d = depth of the stringer

Figure D-1. Neutral Axis in Simple Shapes

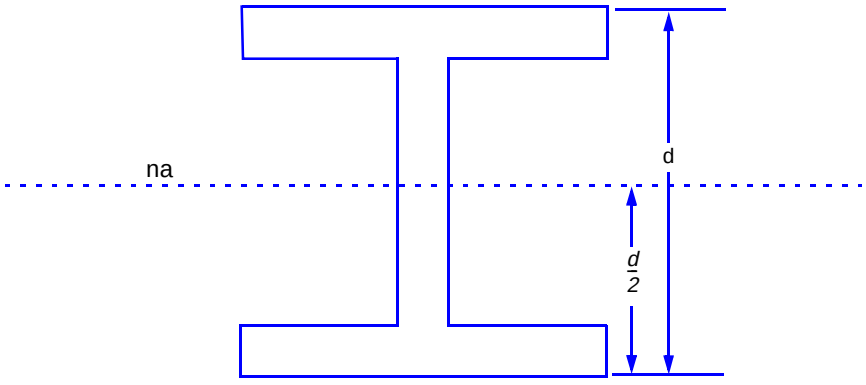

LEGEND:
d = depth of the stringer

Figure D-2. Neutral Axis in Symmetrical, Complex Shapes

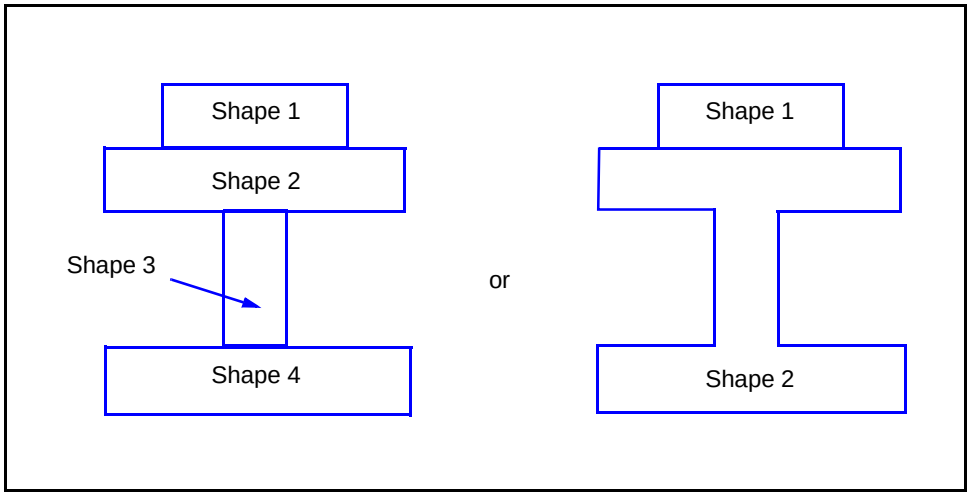

Figure D-3. Sectioning Complex Shapes

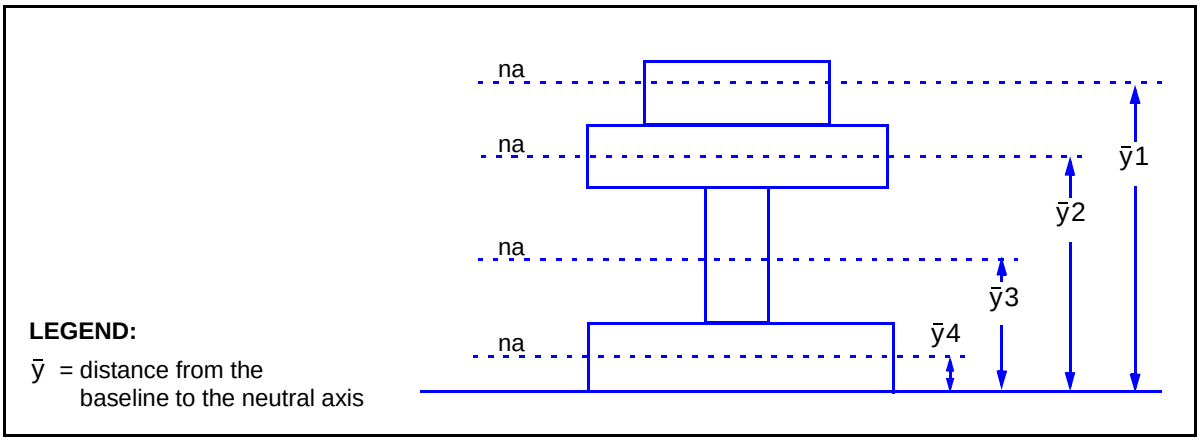

Figure D-4. Determining Baseline-to-Neutral-Axis Distances

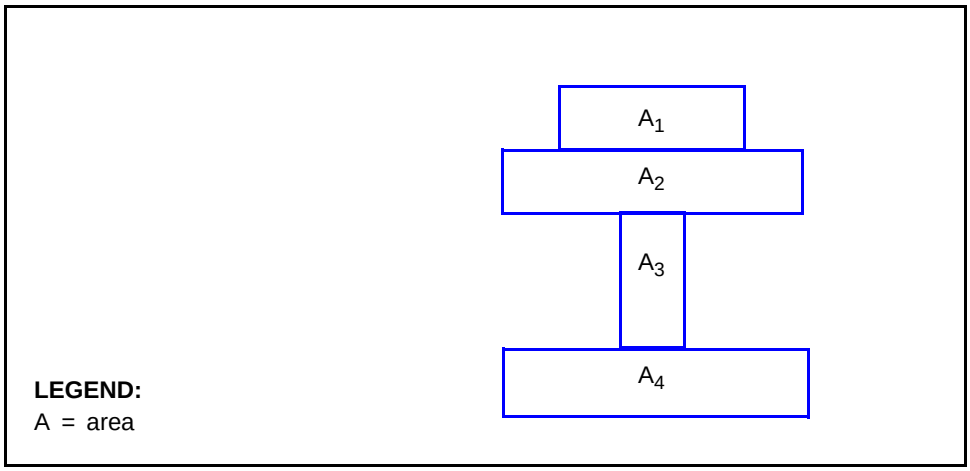

Figure D-5. Areas of the Simple Shapes

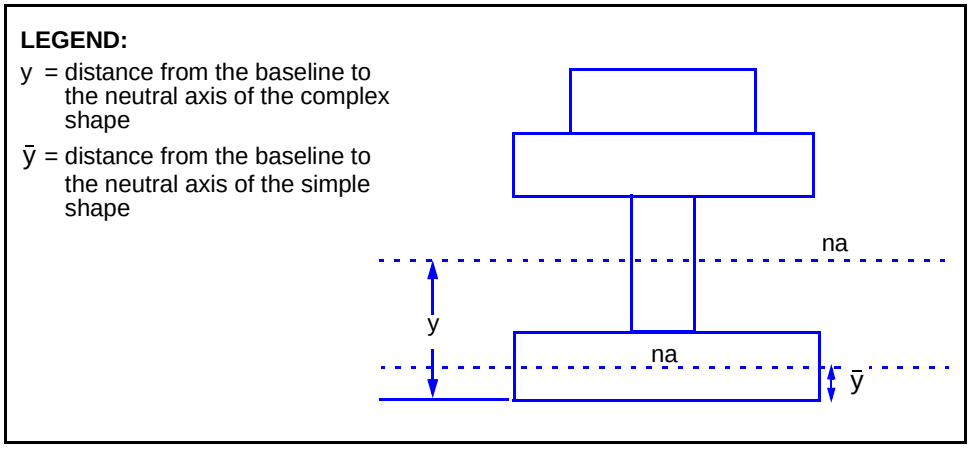

Figure D-6. Example Tabulation of Neutral Axis

MOMENT OF INERTIA

D-9. Compute the moment of inertia of a shape (with respect to the axis) using *Figure D-6* and the following equation:

$$M_i = \int_0^d y^2 dA \qquad \text{(D-3)}$$

where—

M_i = *moment of inertia, in inches*^{4}
d = *distance over which integration occurs, in inches*
y = *distance from the baseline to the element of area, in inches*
dA = *element of area, in square inches*

D-10. The moment of inertia of a given shape changes with the differing locations and orientations of the axis chosen. The axis normally chosen is the neutral axis of the cross section of the beam that is perpendicular to the load being applied *(Figure D-7, page D-16)*. Compute as follows:

- **Simple shapes *(Figure D-8, page D-16)*.**
- **Complex shapes.** Use the parallel-axis theorem, which dictates the use of *Figure D-9, page D-16,* and the following equation:

$$M_{iC} = \Sigma M_{iS} + \Sigma A y^2 \qquad \text{(D-4)}$$

where—

M_{iC} = *moment of inertia of the complex shape about its neutral axis, in inches*^{4}
M_{iS} = *moment of inertia for each simple shape about its neutral axis, in inches*^{4}
A = *area for each simple shape, in square inches*
y = *distance of the neutral axis of each simple shape to the neutral axis of the complex shape, in inches*

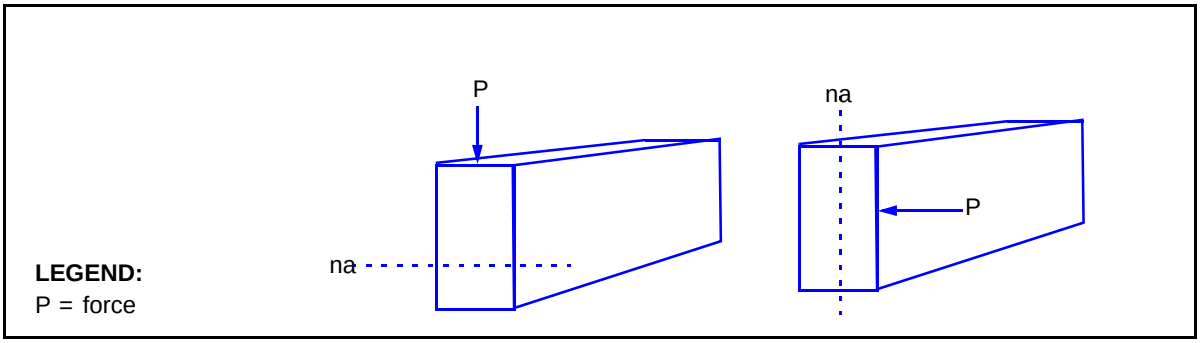

Figure D-7. Axis Orientations Based on Loading

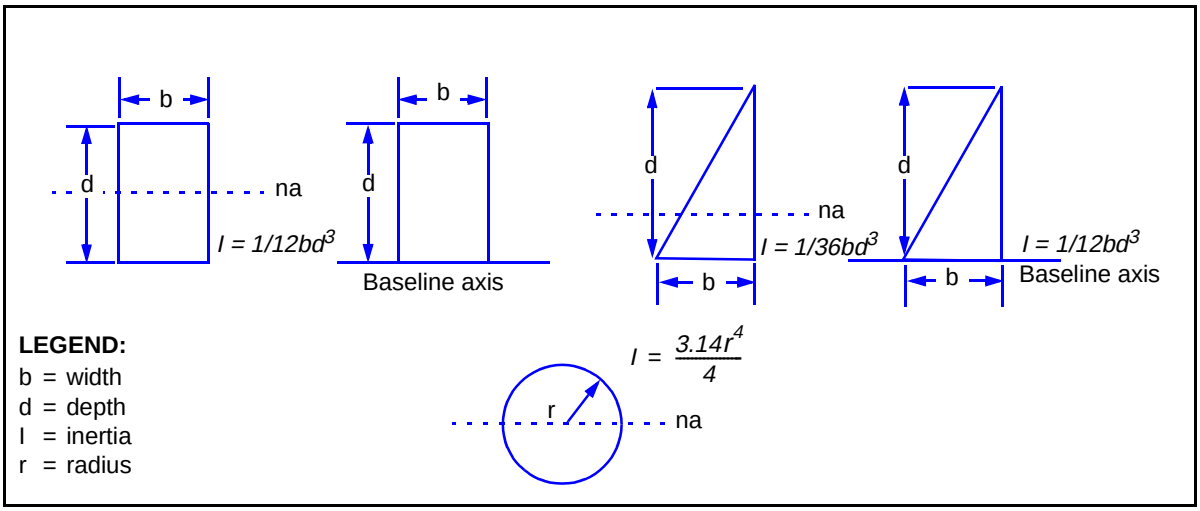

Figure D-8. Moments of Inertia for Simple Shapes

Section	A	y	Ay^2	I_o
	A_1	y1	A_1y1^2	I_{o1}
	A_2	y2	A_2y2^2	I_{o2}
	A_3	y3	A_3y3^2	I_{o3}
	A_4	y4	A_4y4^2	I_{o4}
			$\Sigma Ay^2 = A_1y1^2 + A_2y2^2 + A_3y3^2 + A_4y4^2$	$\Sigma I_o = I_{o1} + I_{o2} + I_{o3} + I_{o4}$

LEGEND:
A = area for each simple shape
y = distance of the neutral axis of each simple shape to the neutral axis of the complex shape
I_o = moment of inertia

Figure D-9. Sample Tabulation of Moments of Inertia

SECTION MODULUS

D-11. Compute the stress induced in the extreme fiber of a given shape as follows. The value of M_i/y_e is defined as the section modulus of the shape. It is a measure of the ability of the shape to resist bending moments about a given axis.

$$F_b = M\frac{M_i}{y_e} = \frac{M}{S} \qquad \text{(D-5)}$$

where—

F_b = *induced stress in the extreme fiber of the shape, in ksi*
M = *moment force applied to the shape, in kip-inches*
M_i = *moment of inertia of the shape, in inches*^{4}
y_e = *distance from the neutral axis to the extreme fiber of the shape, in inches*
S = *section modulus of the shape, in cubic inches*

Symmetrical, Welded Beams and Girders

D-12. Use *Figure D-10* and the following equation (based on the parallel-axis theorem) to approximate the section modulus for symmetrical, built-up beams and girders that have been welded within 5 percent of the true section modulus:

$$S = d_i\left(A_f + \frac{A_w}{6}\right) \qquad \text{(D-6)}$$

where—

S = *section modulus, in cubic inches*
d_i = *interior depth of the beam, in inches*
A_f = *area of one flange, in square inches*
A_w = *area of the web, in square inches*

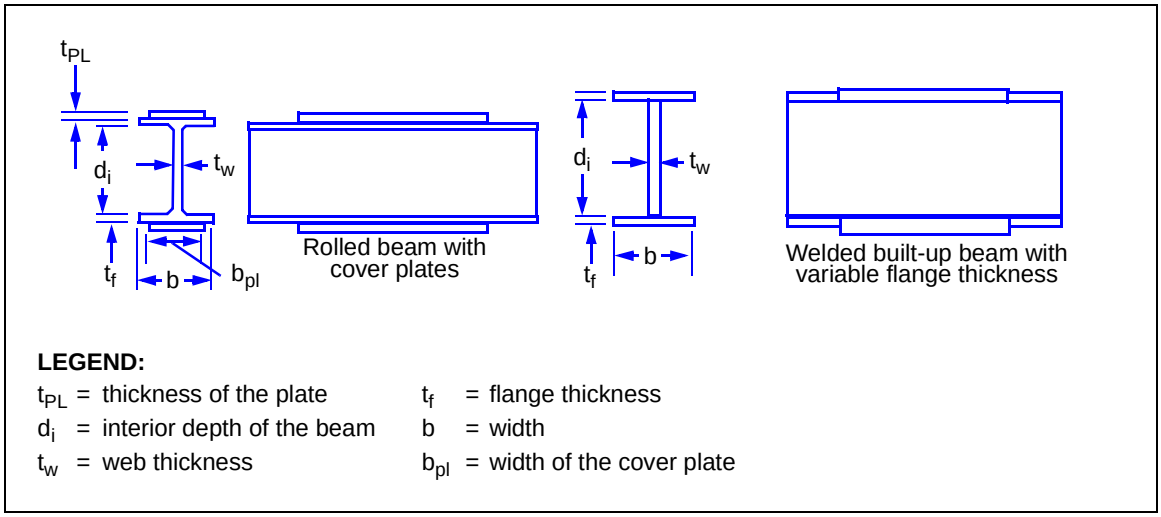

Figure D-10. Built-up Beams

Symmetrical, Riveted Beams and Girders

D-13. Use the following equation and *Figure D-11* to approximate the section modulus of these beams and girders (deduct the area of the rivet holes from the used areas):

$$S = d_w\left(A_f + \frac{A_w}{6}\right) + d_i A_{fa} \qquad \text{(D-7)}$$

where—

S = *section modulus, in cubic inches*
d_w = *web depth measured from angle to angle, in inches*
A_f = *area of one flange, in square inches*
A_w = *area of the web, in square inches*
d_i = *interior depth of the beam, in inches*
A_{fa} = *net area of one set of flange angles, in square inches*

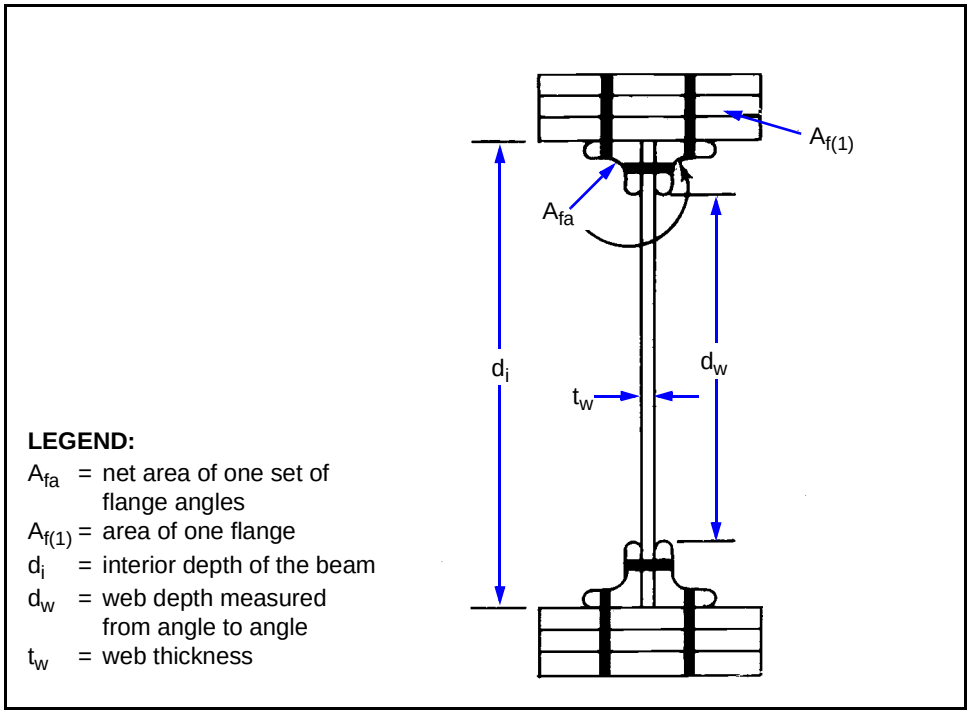

Figure D-11. Riveted Beam or Girder

All Shapes (Symmetrical and Unsymmetrical)

D-14. Compute the section modulus of all types of shapes as follows:

- Determine the location of the neutral axis as described earlier.
- Determine the moment of inertia of the shape about the neutral axis as described earlier.
- Determine the distance from the neutral axis to the point on the section that is the farthest away from the neutral axis.
- Divide the moment of inertia by the neutral axis.

RADIUS OF GYRATION

D-15. The radius of gyration for a shape is the distance from a given axis (usually the neutral axis) where the concentrated mass of the shape would have the same moment of inertia as the actual shape. This value is a measure of how the shape reacts to rotational forces. The purpose of computing the radius of gyration is to determine the capacity of the shape to resist buckling that is induced from compressive and bending forces. Compute the radius of gyration as follows:

$$r = \sqrt{\frac{M_i}{A}} \qquad \text{(D-8)}$$

where—

r = *radius of gyration, in inches*
M_i = *moment of inertia, in inches*^{4}
A = *area of the shape, in square inches*

Appendix E

Structural Mechanics

Engineers working with design analysis encounter mathematical problems on a daily basis. This appendix supports calculations used in this manual and consolidates some of the most often used mathematical concepts that are needed by engineers. Any force that causes an object to rotate is said to contribute a moment to the object. This and other concepts about loads, forces, reactions, and how to keep a body in equilibrium are discussed.

DEAD, LIVE, AND IMPACT LOADS

E-1. The dead load acting on a bridge is the weight of the permanent bridge components such as stringers, decking, accessories, and hardware. Base dead-load calculations on the dimensions of component members using the following densities:

- Timber, 0.04 kips per cubic foot.
- Concrete, 0.15 kips per cubic foot.
- Steel, 0.49 kips per cubic foot.

The dead load of the accessories can be closely estimated as follows:

- Timber-deck bridges, 0.1 kips per linear foot.
- Concrete-deck bridges, 0.4 kips per linear foot.

E-2. Live loads consist of any nonpermanent loads (such as vehicles, pedestrians, snow, ice, or wind) that are applied temporarily to a bridge. Consider the wheeled and tracked effect of these loads on the bridge and design the bridge for the worst case.

E-3. Impact loads are the forces exerted on a bridge as a result of the sudden application or removal of live loads. When steel stringers are used, increase the live load by 15 percent to account for the impact loading. Timber stringers tend to absorb shock, so no adjustment is needed for impact loading.

STRESSES

E-4. Stress is an internal force, or reaction, that results within a member when an external load acts on it. The loading condition (the position and movement of the load) may create in a member one or more of the stresses discussed below. Based on the material of the member, a limiting value can be placed on the magnitude of these internal stresses. For design and analysis, use the values in *Appendixes C* and *D*.

TENSILE STRESS

E-5. The tension member in *Figure E-1* could be a suspension bridge cable or a truss component. As the member is being pulled, internal tensile stresses are formed as a reaction to the external loads. Compute the tensile stress as follows:

$$f_T = \frac{T}{A} \qquad \text{(E-1)}$$

where—

f_T = *tensile stress in the member, in ksi*
T = *total tension, in kips*
A = *cross-sectional area of the member, in square inches*

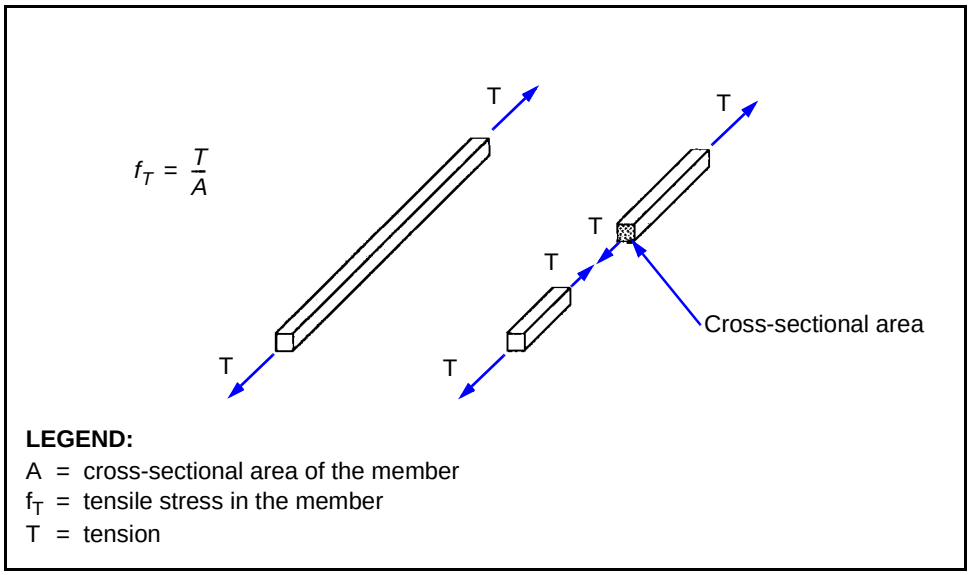

Figure E-1. Tension Member

COMPRESSIVE STRESS

E-6. If a bridge member is loaded compressively (as in the top chord of a truss bridge), internal compressive stresses are formed as a reaction to the external loads *(Figure E-2)*. Compute the compressive stress as follows:

$$f_a = \frac{C}{A} \qquad \text{(E-2)}$$

where—

f_a = *axial compressive stress in the member, in ksi*
C = *load weight, in kips*
A = *cross-sectional area of the member, in square inches*

$$f_a = \frac{C}{A} = \frac{lbs}{in^2}$$

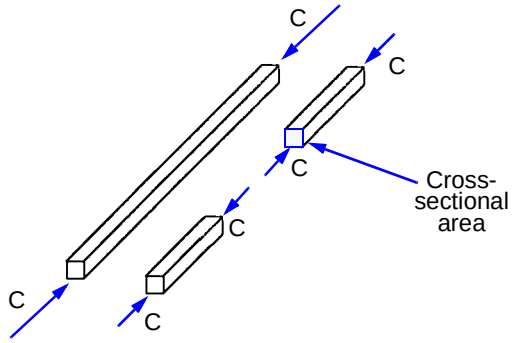

LEGEND:
A = cross-sectional area of the member
C = compression
f_a = axial compressive stress in the member

Figure E-2. Compression Member

BEARING STRESS

E-7. When stringers rest on a cap or sill, bearing stresses are introduced into both members at the point of contact *(Figure E-3)*. Because of the large difference in allowable stresses between steel and timber, use bearing plates to increase the contact area and lower the bearing stress in timber. Compute the bearing stress as follows:

$$f_B = \frac{F}{A} \qquad \text{(E-3)}$$

where—

f_B = *bearing stress in the member, in ksi*
F = *total bearing load, in kips*
A = *cross-sectional area of the member resisting shear, in square inches*

$$f_B = \frac{F}{A} = \frac{lbs}{in^2}$$

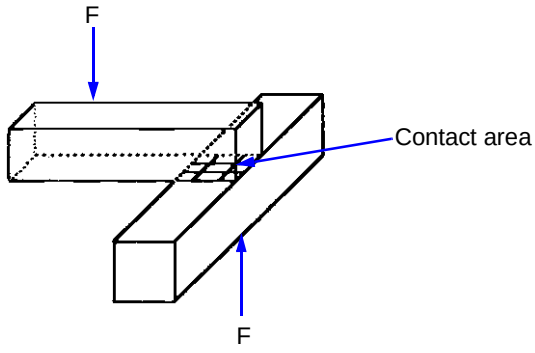

LEGEND:
A = cross-sectional area of the member resisting shear
F = total bearing load
f_B = bearing stress in the member

Figure E-3. Bearing Members

SHEAR STRESS

E-8. Shear forces act very much like a pair of scissors cutting a piece of paper. When forces of equal magnitude and opposite direction act on a member, internal shear forces are generated as a reaction to the external loads *(Figure E-4)*. Shear failures in stringers usually occur close to the supports in members that are less than 20 feet long. Compute shear stress as follows:

$$f_v = \frac{V}{A} \qquad \text{(E-4)}$$

where—

f_v = *shear stress in the member, in ksi*
V = *total shear forces, in kips*
A = *area of contact, in square inches*

$f_v = \frac{V}{A} = \frac{kips}{in^2}$

where—

f_v = *shear stress in the member*
V = *total shear forces. By convention, this is the sum of all vertical forces to the left of the section of interest.*
A = *area of contact*

LEGEND:
F = force

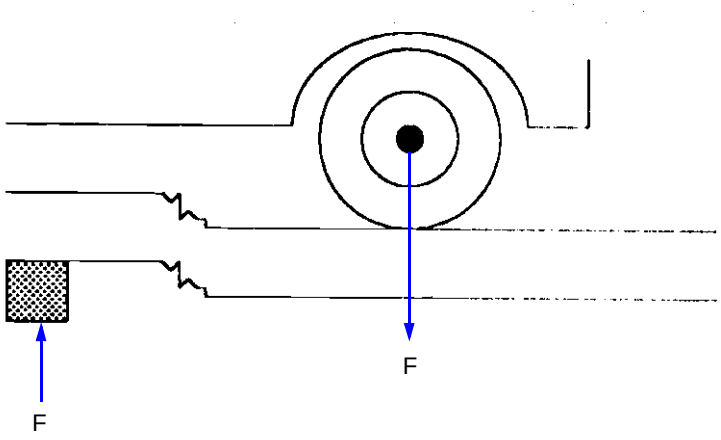

Figure E-4. Shear Stress

MOMENT STRESS

E-9. Moment is the tendency of a body to rotate about an axis as a result of a force acting over a lever arm. Using a wrench to turn a bolt is a good example of moment. The longer the wrench, the less effort that is required to turn the bolt. Internal moment stresses are generated when members bend (such as when a stringer bends under the load of a vehicle). As shown in *Figure E-5*, compressive and tensile forces are generated inside the stringer as a result of an applied moment.

E-10. Section modulous is the property that measures the beam's ability to resist bending. Although expressed in units of volume, section modulus functions as an index of the member's size, shape, and orientation with

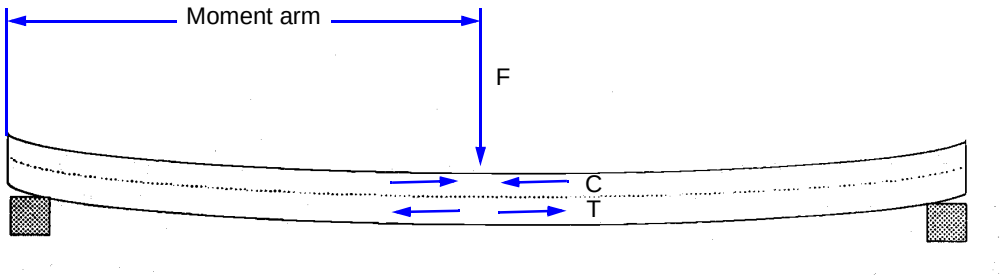

LEGEND:
F = force
C = compression
T = tension

Figure E-5. Moment (Bending Stress)

respect to the load. For example, of the two timber orientations shown in *Figure E-6, page E-6*, the one to the left results in less deflection. This orientation is stronger and distributes the stress better because the compressive and tensile stresses generated by the moment in the beam are farther away from each other. Consequently, the section modulus of the stringer to the left is greater than the section modulus of the stringerto the right.

- Compute the bending stress as follows:

$$f_b = \frac{M}{S} \quad \text{(E-5)}$$

where—

f_b = *bending stress in the member, in ksi*
M = *total moment in the member, in kip-feet*
S = *section modulus of the member, in cubic inches*

- Compute the section modulus for rectangular beams as follows:

$$S = \frac{bd^2}{6} \quad \text{(E-6)}$$

where—

S = *section modulus of the member, in cubic inches*
b = *member width, in inches*
d = *member depth, in inches*

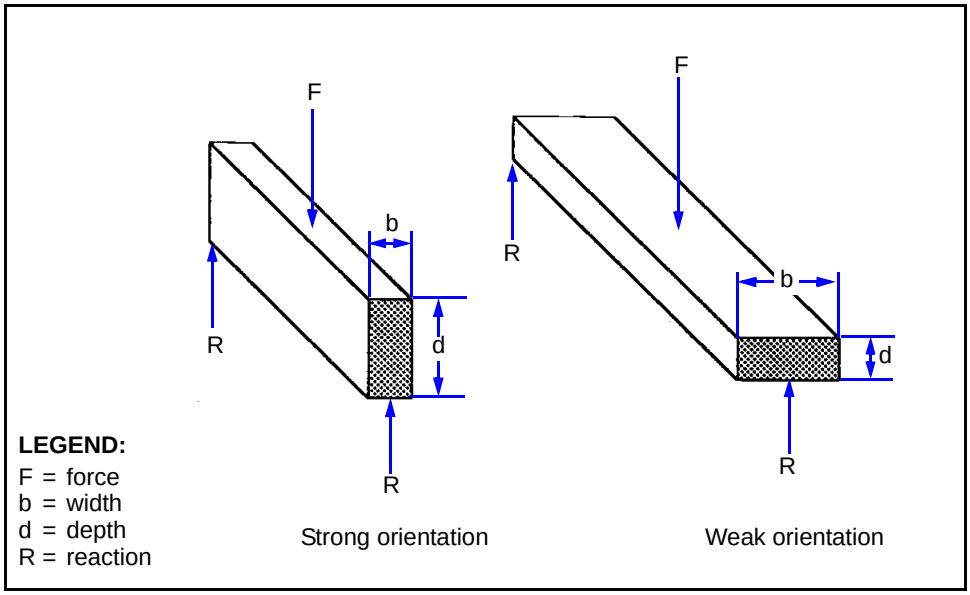

Figure E-6. Stringer Orientations for Section Modulus

STATIC EQUILIBRIUM

E-11. If a body is at rest under the action of forces, it is said to be in equilibrium. To keep a body in equilibrium, the following three conditions must be met:

- The algebraic sum of all forces in a horizontal direction must equal zero ($\Sigma F_H = 0$). The forces acting to the right are considered positive and the forces acting to the left are considered negative.
- The algebraic sum of all forces in a vertical direction must equal zero ($\Sigma F_v = 0$). The forces acting upward are considered positive and the forces acting downward are considered negative.
- The algebraic sum of all moments about any point must equal zero ($\Sigma M = 0$). The moments acting clockwise are considered positive the moments acting counterclockwise are considered negative.

E-12. These three conditions of static equilibrium are useful in analyzing the loading of structural members in a fixed bridge. For example, *Figure E-7* shows a simply supported stringer in equilibrium with a 10-kip load acting vertically at midspan. To design the supports, use the three conditions for equilibrium to determine the reactions at Points A and B. For this example, ignore the dead-load effects of the stringer.

E-13. There are no horizontal forces, so the value for ΣF_H is zero. Since the stringer is in equilibrium, the value for ΣF_v is also zero. The values for the reactions at Points A and B are unknown. However, even with two unknowns, the following equation must be true:

$$\Sigma 10 F_v = R_A - P + R_B = 0 \qquad \text{(E-7)}$$

$$= R_A - 10 + R_B = 0$$

where—

ΣF_v = *total vertical forces on the stringer, in kips*
R_A = *reaction at Point A, in kips*
P = *applied load, in kips*
R_B = *reaction at Point B, in kips*

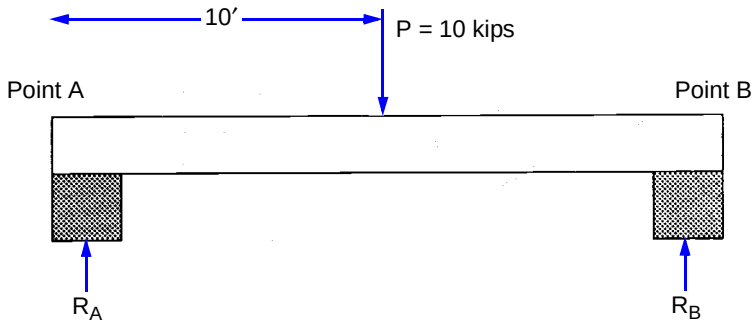

LEGEND:
P = force (applied load)
R_A = reaction at Point A
R_B = reaction at Point B

Figure E-7. Static Equilibrium

E-14. The moments about any point must also equal zero. The first step in summing the moments is to choose the point around which to sum the moments (the assumed point of rotation). The point of rotation can be anywhere on or off the beam, but it should eliminate one of the unknowns from the summation of moments equation.

E-15. Start at the left support (Point A) and sum all the moments caused by all the forces acting on the beam. The moment caused by a force equals the load multiplied by the perpendicular distance from the force's line of action to the point of rotation. Since all the forces acting on the beam are vertical, find the horizontal distance from the point at which the load acts to Point A. Sum all of the forces about Point A as follows:

$$\Sigma M_A = R_A(0) + Px + R_B L = R_A(0) + 10(10) + [-R_B(20)] \quad \text{(E-8)}$$

where—

ΣM_A = *total moment about the point of rotation, in kip-feet*
R_A = *vertical reaction at Point A, in kips*
P = *applied load, in kips*
x = *distance from Point A to the load, in feet*
R_B = *vertical reaction at Point B, in kips*
L = *span length, in feet*

E-16. Every force that acts on the beam must be included in the summation. The value for $R_A(0)$ equals zero, so the unknown R_A drops out of the equation and only one unknown is left. With only one unknown, compute the reaction at Point B as follows:

$$10(10) - R_B 20 = 0 \qquad \text{(E-9)}$$

$$R_B = \frac{10(10)}{20} = 5$$

where—

R_B = *vertical reaction at Point B, in kips*

E-17. With a value for the reaction at Point B, find the value for the reaction at Point A as follows:

$$R_A - 10 + 5 = 0 \qquad \text{(E-10)}$$

$$R_A = 10 - 5 = 5$$

where—

R_A = *vertical reaction at Point A, in kips*

E-18. If a force is applied at the midspan, the reactions at the ends should equal one-half the force and be opposite in direction. Providing values for the shear equation will prove this.

$$\Sigma F_v = R_A - P + R_B = 5 - 10 + 5 = 0 \qquad \text{(E-11)}$$

where—

ΣF_v = *total vertical forces on the stringer, in kips*
R_A = *vertical reaction at Point A, in kips*
P = *applied load, in kips*
R_B = *vertical reaction at Point B, in kips*

E-19. By knowing the values of R_A and R_B, all of the external forces acting on the beam are known. The internal reactions caused by the inside of the beam due to the external forces is determined next.

INTERNAL REACTIONS

E-20. To span a gap, a beam must remain rigid to keep from bending and falling into the gap (unlike a cable which bends and falls). The force that prevents a beam from bending is called the internal moment force. The beam must also have internal shear forces or it will not be able to resist cutting forces acting on it. As the beam must be rigid enough to span a gap, it must be in static equilibrium both internally and externally. The equilibrium equations apply both to the beam as a whole or to any portion of the beam.

E-21. Internal shear and moment act as a couple—two equal forces acting in opposite directions—as illustrated in the free-body diagrams in *Figure E-8*. In shear and moment calculations, always assume a positive couple. Then, if the

assumptions are correct, the calculations will show positive shear or moment. If the assumptions are incorrect, the calculations will show negative shear or moment. If each shear-and-moment couple used the same negative and positive designation as those for the forces in static equilibrium, each couple would show both positive and negative forces. For this reason, use the sign conventions shown in the legend for *Figure E-8*. To determine the internal shear and moment values, analyze either of the free-body diagrams *(Figure E-8)* as if each were a separate beam with two unknown forces acting on the ends.

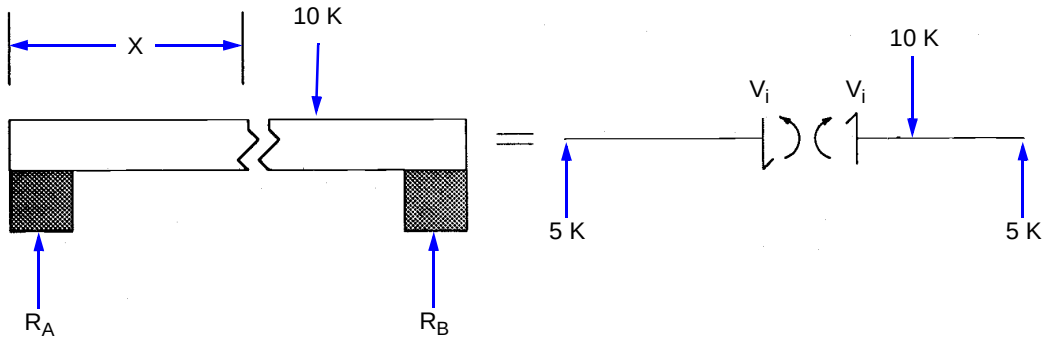

LEGEND:

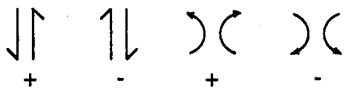

X = perpendicular distance
K = kips
R_A = reaction at Point A
R_B = reaction at Point B
V_i = internal shear

Figure E-8. Internal Shear and Moment Reactions

INTERNAL SHEAR FORCE

E-22. To determine the internal shear force, set the sum of the total vertical forces equal to zero. In *Figure E-8* then, the only forces acting on the beam are the 5-kip reaction at Point A and the internal shear force. To work out the units correctly, always analyze the free-body diagram to the left of the point of interest. Begin at the far left of the diagram and work to the shear at the point of interest *(Figure E-9, page E-10)* using the following equation:

$$\Sigma F_V = R_A - V_i = 5 - V_i = 0 \qquad \text{(E-12)}$$

where—

ΣF_V = *total shear, in kips*
R_A = *reaction at Point A, in kips*
V_i = *internal shear of the member, in kips*

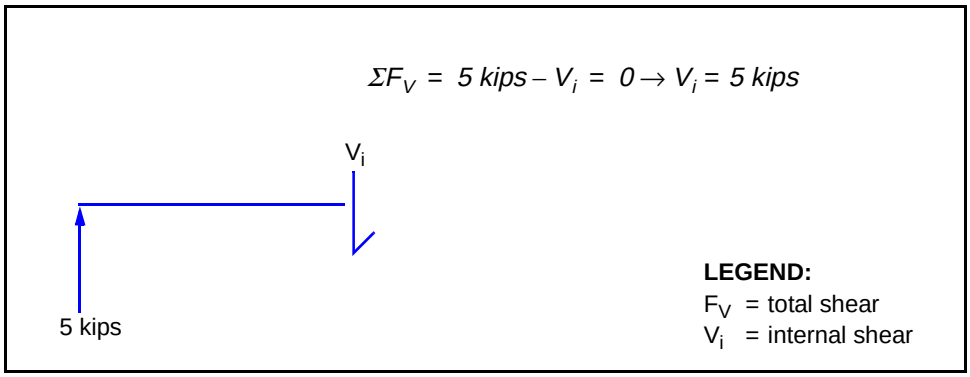

Figure E-9. Internal Shear Force

INTERNAL MOMENT

E-23. To find the internal moment, sum the moments of all the forces to the left of the point of interest *(Figure E-9)*. The best assumed point of rotation is at the center of the point of interest. Begin at the far left of the diagram and work to the moment at the point of interest *(Figure E-10)* using the following equation:

$$\Sigma M = R_A x + V_i(0) - (-Mi) = 5x + 50 - M_i = 0 \quad \text{(E-13)}$$

$M_i = 5x$

where—

ΣM = *total moment in the member, in kip-feet*
R_A = *reaction at Point A, in kips*
x = *distance from the rotation point (Point A) to the point of interest, in feet*
V_i = *internal shear at the point of interest, in kips*
M_i = *internal moment in the member, in kip-feet*

E-24. Although the internal moment equals the reaction at Point A times the distance from the point of rotation to the point of interest, the value of the internal moment is not multiplied by a distance. This is because it is a moment force, not a vertical force. Instead, it is just given the proper sign and added to the equation.

SHEAR AND MOMENT DIAGRAMS

E-25. A convenient way to portray the internal shear and moment due to external forces at any section of a beam is to construct diagrams. The best way to illustrate shear and moment diagrams is by the two examples discussed below.

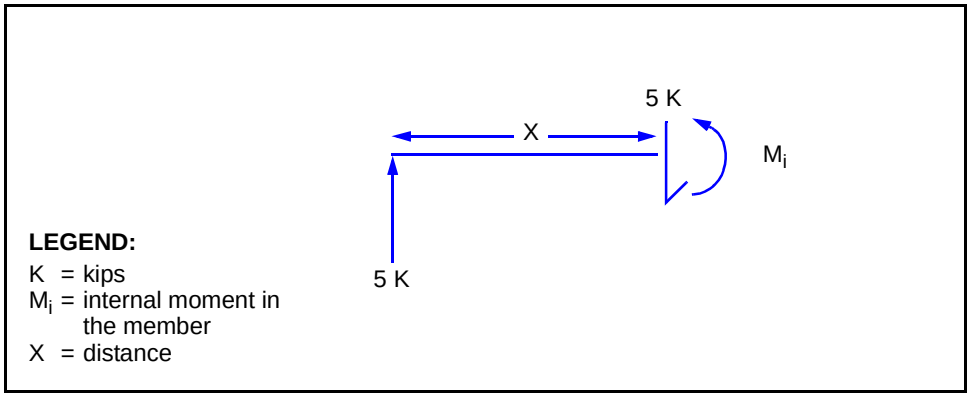

Figure E-10. Internal Moment

EXAMPLE ONE

E-26. For shear and moment diagrams, start with a diagram of the beam. For this example, *Figure E-11* shows a beam with two concentrated loads acting on it.

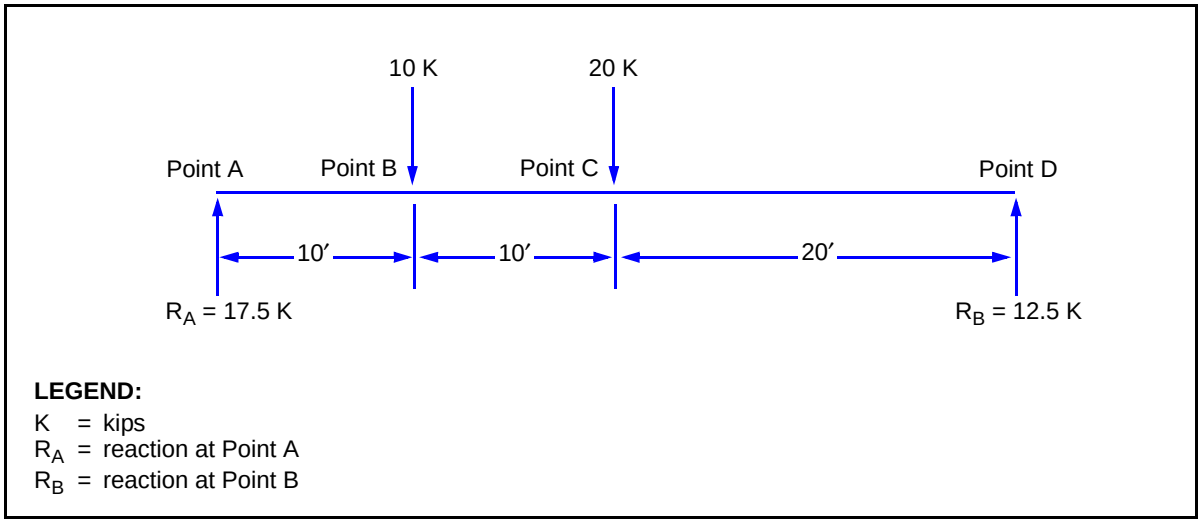

Figure E-11. Internal Moment for Example One

Shear Diagram

E-27. A shear diagram always begins and ends with the shear value equal to zero. The first step in drawing shear diagrams is to determine the support reactions due to the applied loads (use the conditions of static equilibrium). Next, draw a baseline directly below the beam diagram and to the same horizontal scale *(Figure E-12, page E-12)*. This line represents the horizontal axis where the value of shear equals zero. Draw light vertical lines at the ends of the baseline to mark the beginning and end of the diagram. The key locations are to the immediate right and left of any load or reaction. Find the internal shear of the key locations (listed in *equation E-14)* in the beam from the reaction at Point A (R_A).

$V_A = R_A = 17.5\ kips$ (E-14)

$V_{B1} = R_A = 17.5\ kips$

$V_{B2} = R_A - 10\ kips = 7.5\ kips$

$V_{C1} = R_A - 10\ kips = 7.5\ kips$

$V_{C2} = R_A - 10\ kips - 20\ kips = -12.5\ kips$

$V_D = R_A - 10\ kips - 20\ kips + R_B = 0$

where—

V_A = *internal shear at Point A*
R_A = *reaction at Point A, in kips*
V_{B1} = *internal shear just to the left of Point B*
V_{B2} = *internal shear just to the right of Point B*
V_{C1} = *internal shear just to the left of Point C*
V_{C2} = *internal shear just to the right of Point C*
V_D = *internal shear at Point D*

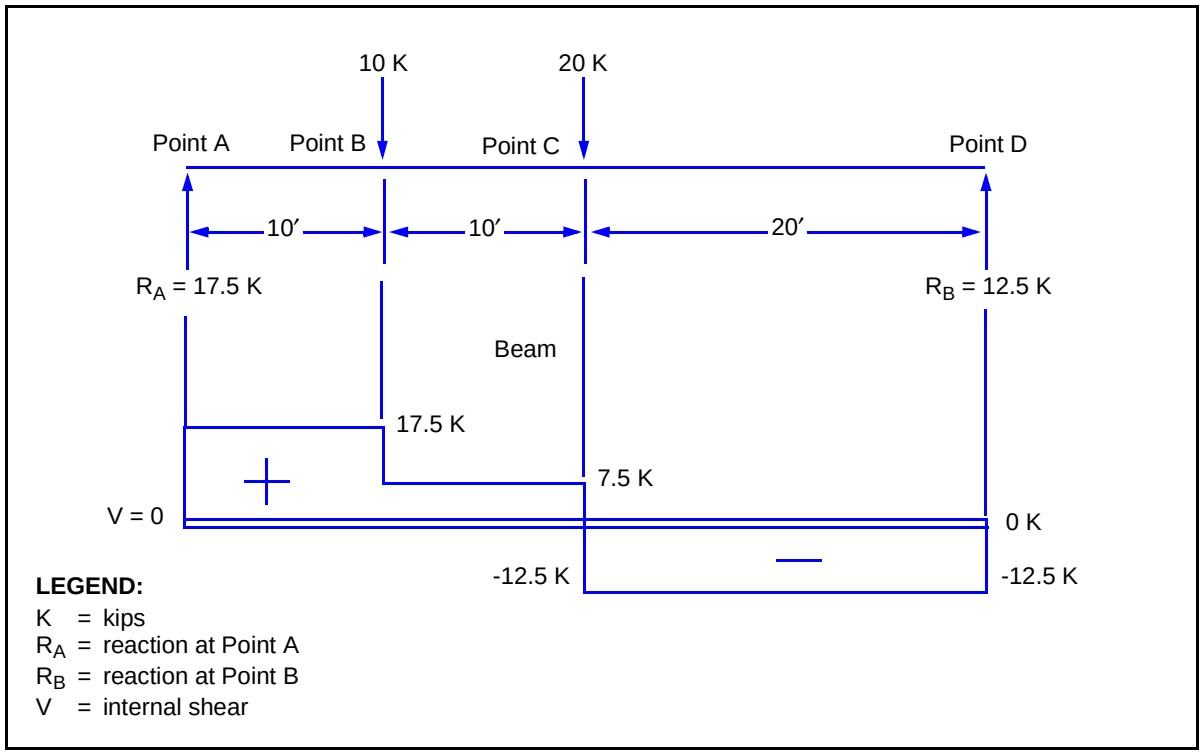

Figure E-12. Shear Diagram for Example One

E-28. Plot the shear values on the diagram as shown in *Figure E-12*. All values above the line are positive and those values below the line are negative. As the diagram shows, the internal shear remains constant between applied loads. Internal shear only changes at points where the load is applied. The shear value for the beam equals the reactions in the supports at the ends of the beam.

Moment Diagram

E-29. Begin the moment diagram by drawing a baseline directly below the shear diagram and to the same horizontal scale *(Figure E-13)*. The baseline is the reference line where the moment equals zero.

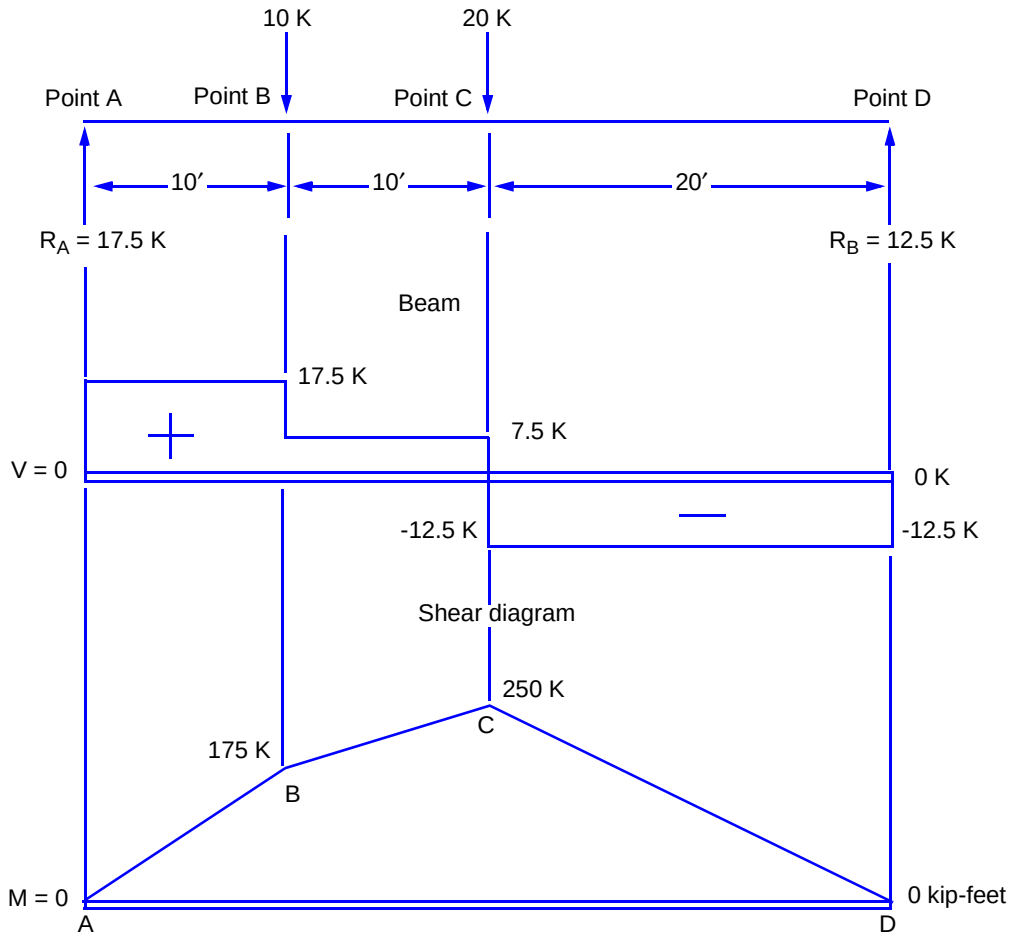

LEGEND:

A = Point A
B = Point B
C = Point C
D = Point D
K = kips
M = moment
R_A = reaction at Point A
R_B = reaction at Point B
V = internal shear

Figure E-13. Moment Diagram for Example One

E-30. The key points for moment are at the points of the applied loads (Points A, B, C, and D in the diagram). To find the values for internal moment at the key points, start at Point A and work to the right, summing all of the moments (listed in *equation E-15)* to the left of the point of interest. A moment is a force times the perpendicular distance between the line of action of the force and the point at which moments are summed.

$$M_A = 17.5(0) = 0 \quad \text{(E-15)}$$

$$M_B = 17.5(10) - 10(0) = 175 \text{ kip-feet}$$

$$M_C = 17.5(20) - 10(10) - 20(0) = 250 \text{ kip-feet}$$

$$M_D = 17.5(40) - 10(30) - 20(20) + 12.5(0) = 0$$

where—

M_A = *moment at Point A*
M_B = *moment at Point B*
M_C = *moment at Point C*
M_D = *moment at Point D*

E-31. Plot the values for internal moment as shown in *Figure E-13, page E-13*. As the diagram shows, maximum shear is at the ends of the beam and maximum moment is at the center of the beam. The shear and moment anywhere along the beam can be determined from this diagram.

EXAMPLE TWO

E-32. *Figure E-14* shows a diagram for a uniformly loaded beam. A uniform load includes the weights of the beam, bridge deck, and snow or ice loads that are applied evenly along the length of a beam. Tracked vehicles also distribute loads along the length of the span. Uniformly distributed loads are expressed in an amount of loading per foot of span (in kips).

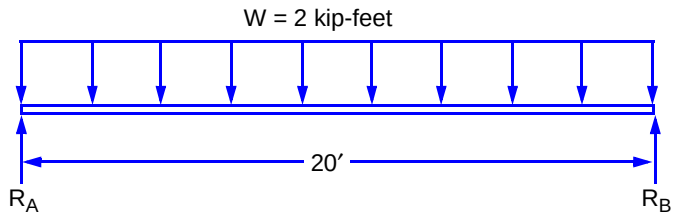

LEGEND:
R_A = reaction at Point A
R_B = reaction at Point B
W = uniform load on the span

Figure E-14. Uniform Load

External Forces

E-33. The first step in drawing shear and moment diagrams is finding the external reactions at the supports. The total vertical forces and the total moments will both equal zero. The vertical forces acting in an upward direction are the unknown reactions at the supports. The vertical forces acting in a downward direction are the uniformly distributed load. To determine the total load acting downward on the span, multiply the uniformly distributed load by the span length. Compute as follows:

$$\Sigma F_V = R_A + wL + R_B = R_A + [-2(20)] + R_B = 0 \qquad \text{(E-16)}$$

where—

ΣF_V = *algebraic sum of all the vertical forces*
R_A = *reaction at Point A, in kips*
w = *uniform load on the span, in kpf*
L = *span length, in feet*
R_B = *reaction at Point B, in kips*

E-34. Since the equation has two unknowns, use the condition for moment in equilibrium. To determine the moment caused by the uniform load, convert the load to an equivalent concentrated load. The equivalent concentrated load is equal to the uniform load multiplied by the span length. It is positioned at the midspan *(Figure E-15)*.

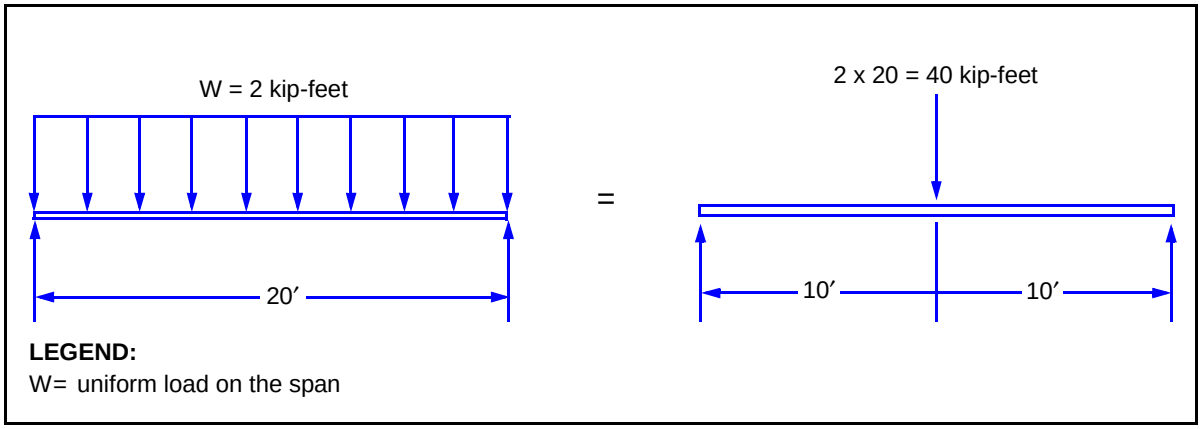

Figure E-15. Uniform to Concentrated Load for Example Two

E-35. To get rid of one of the unknowns in *equation E-8,* sum the moments about one of the supports (Point A or B). Compute as follows:

- For this example, start at the far left of the diagram for the concentrated load and sum the moments about Point A.

$$\Sigma M_A = R_A(0) + Px + R_B L = R_A(0) + 40(10) + [-R_B(20)] = 0 \qquad \text{(E-17)}$$

where—

ΣM_A = *total moment about Point A, in kips*

R_A = *reaction at Point A, in kips*
P = *concentrated load, in kips*
x = *distance from the point of rotation to the point of interest, in feet*
R_B = *reaction at Point B, in kips*
L = *span length, in feet*

- To solve for the value of the reaction at Point B, use *equation E-9*.

$$400 - R_B 20 = 0 \quad \text{(E-18)}$$

$$R_B = \frac{400}{20} = 20 \text{ kips}$$

where—

R_B = *reaction at Point B, in kips*

- With a value for the reaction at Point B, find the value for the reaction at Point A.

$$R_A - 40 + 20 = 0 \quad \text{(E-19)}$$

$$R_A = 40 - 20 = 20 \text{ kips}$$

where—

R_A = *reaction at Point A, in kips*

Shear Diagram

E-36. *Figure E-16* shows a uniformly loaded beam. Calculate for shear as follows:

- To compute the internal shear of the beam, start at the far left and sum all of the vertical forces to the point of interest *(Figure E-17)* as follows:

$$\Sigma F_V = R_A - Wx - V_i = 20 - 2x - V_i = 0 \quad \text{(E-20)}$$

where—

ΣF_V = *total shear about Point A, in kips*
R_A = *reaction at Point A, in kips*
W = *applied load, in kpf*
x = *some distance, in feet*
V_i = *internal shear, in kips*

- To find the value for internal shear, substitute varying values for distance in the following equation:

$$V_i = R_A - Wx \quad \text{(E-21)}$$

$$= 20 - 2(5) = 10 \text{ kips}$$

$= 20 - 2(10) = 0 \text{ kips}$

$= 20 - 2(15) = -10 \text{ kips}$

$= 20 - 2(20) = -20 \text{ kips}$

where—

V_i = *internal shear, in kips*
R_A = *reaction at Point A, in kips*
W = *applied load, in kpf*
x = *some distance, in feet*

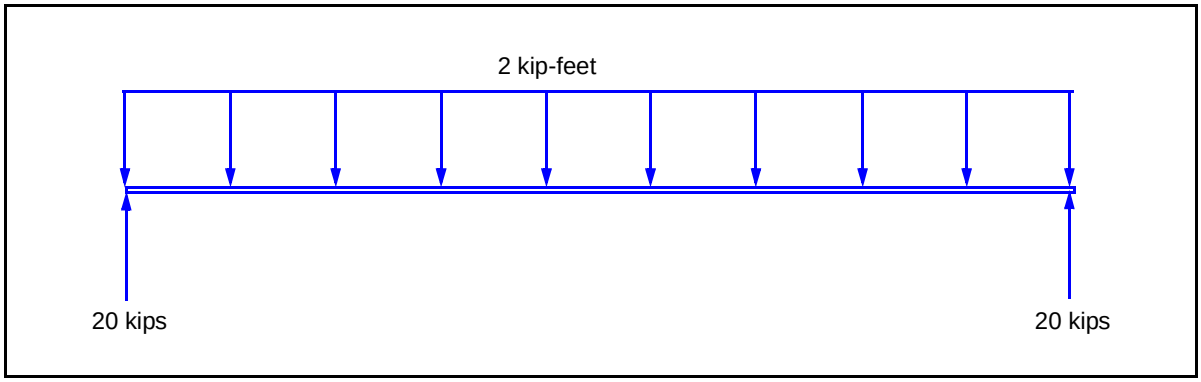

Figure E-16. Beam Diagram for Example Two

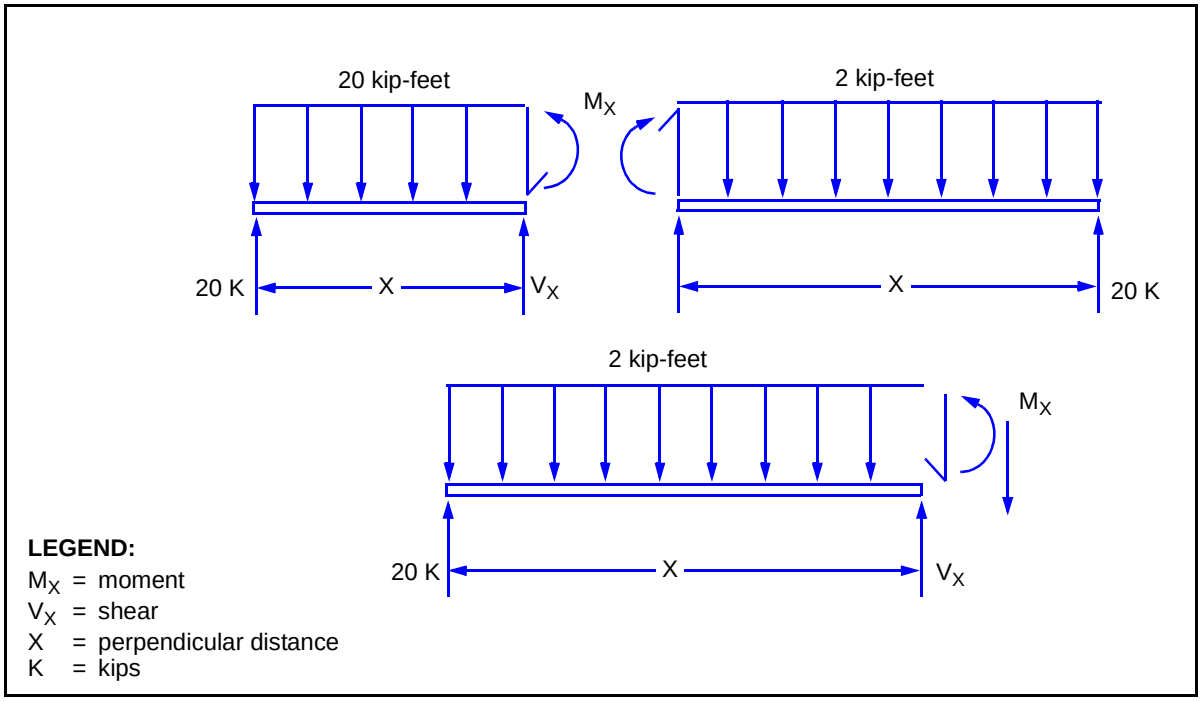

Figure E-17. Sum Forces to Left of the Cut

E-37. Analyzing the equation algebraically will show that internal shear is a linear function of the distance from the support. Plotting the results of the equation gives a straight line that starts at 20, for a length value equal to 0, and ends at -20, for a length value equal to 20 *(Figure E-18).*

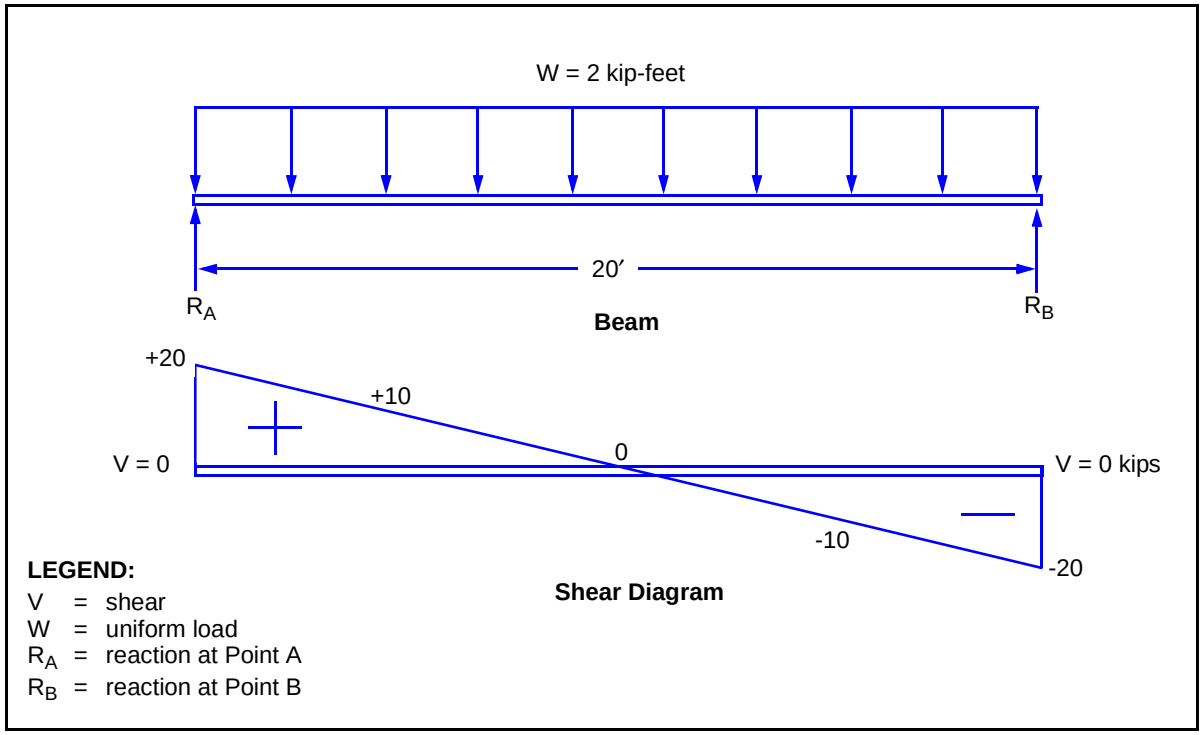

Figure E-18. Shear Diagram for Example Two

Moment Diagram

E-38. Begin the moment diagram by deriving a general equation for internal moment at any point. To do this, pretend to cut the beam at an unknown distance from the left support. Sum all of the moments about the cut point. Then, convert the portion of the uniformly distributed load acting on the span to the left of the cut into an equivalent concentrated load *(Figure E-19).*

- Compute the internal moment by summing the moments about Point D for all the forces acting to the left:

$$\Sigma M_d = R_A x + \left[-2x\left(\frac{x}{2}\right)\right] + V_i(0) + (-M_i) = 20x - x^2 - M_i = 0 \qquad \text{(E-22)}$$

where—

ΣM_d = *total moment at the point of interest, in kip-feet*
R_A = *reaction at Point A, in kips*
x = *distance from the point of rotation to the point of interest, in feet*
V_i = *internal shear at the point of interest, in kips*
M_i = *internal moment at the point of interest, in kip-feet*

- Compute the moment at the point of interest as follows:

$$M_i = R_A x - x^2 \qquad \text{(E-23)}$$

where—

M_i = *internal moment at the point of interest, in kip-feet*
R_A = *reaction at Point A, in kips*
x = *distance from the point of rotation to the point of interest, in feet*

- Find the value for internal moment by substituting varying values for distance into *equation E-22* and plotting the results on a moment diagram as shown in *Figure E-20, page E-20*.

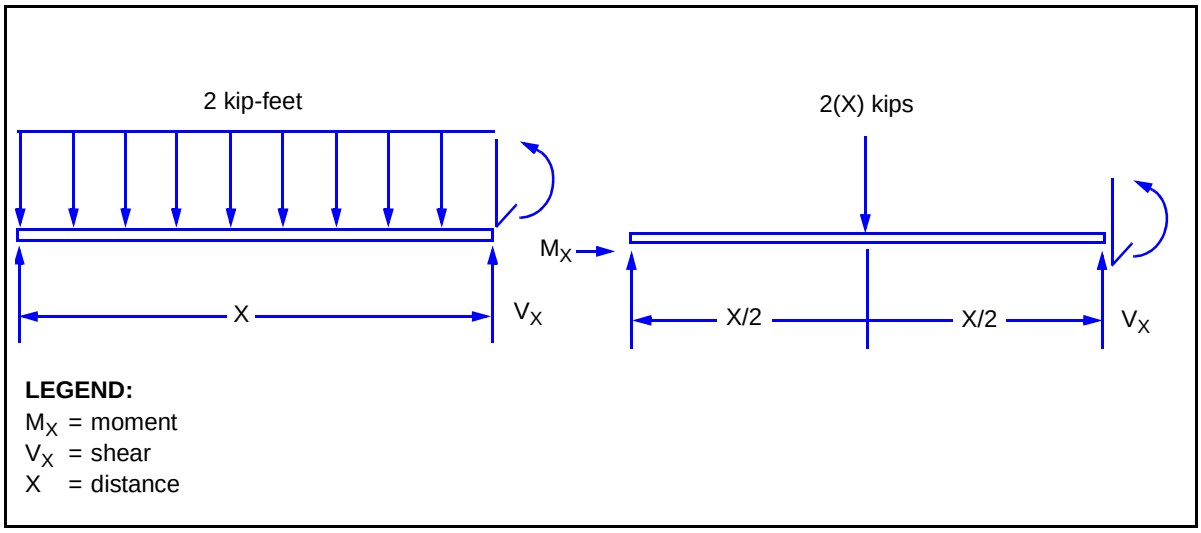

Figure E-19. Uniform to Concentrated Load

SHEAR- AND MOMENT-DIAGRAM CHARACTERISTICS

E-39. *Figure E-21, pages E-21* through *E-26*, shows shear and moment diagrams and their related equations for specific loading conditions.

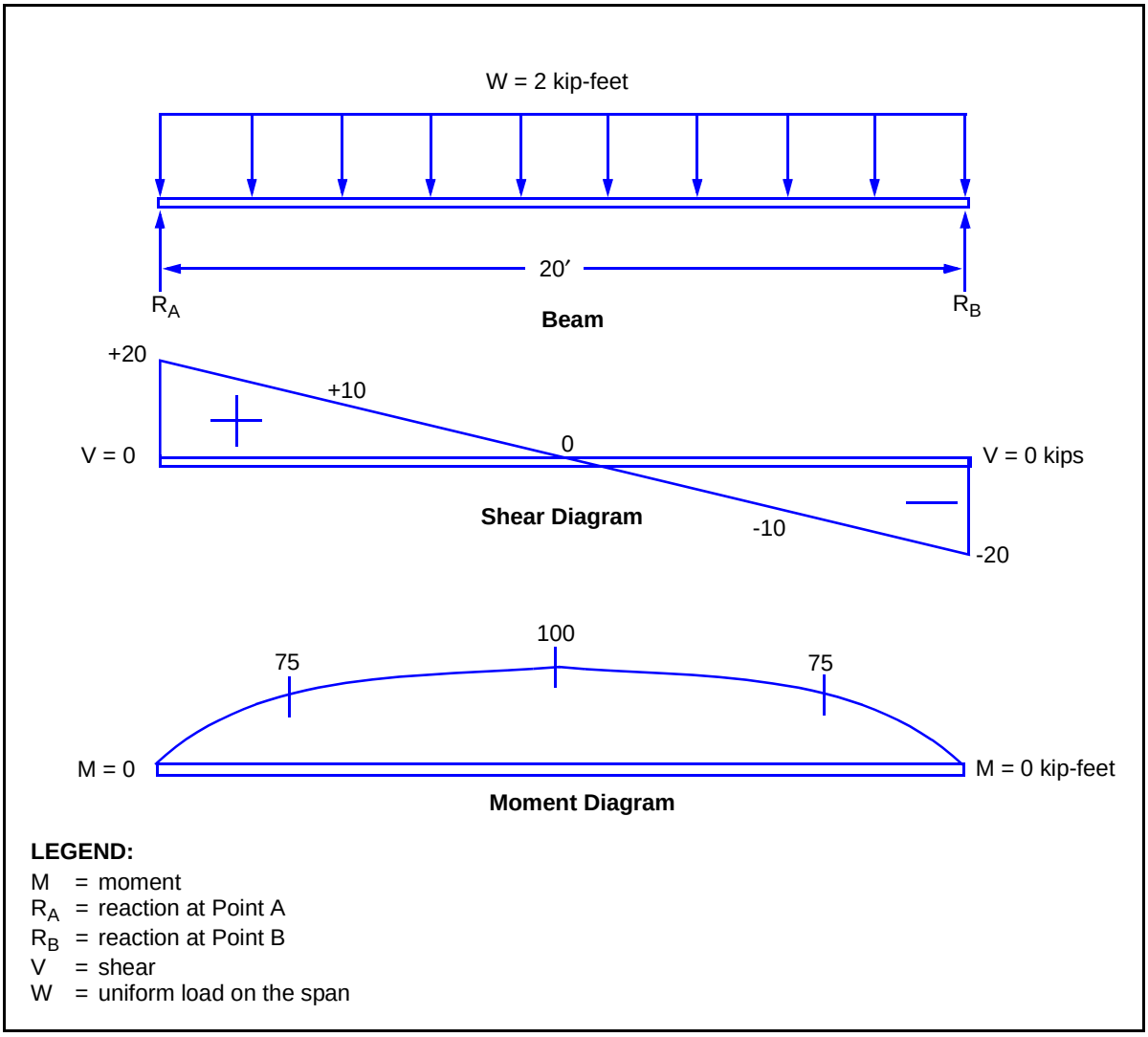

LEGEND:

M = moment
R_A = reaction at Point A
R_B = reaction at Point B
V = shear
W = uniform load on the span

Figure E-20. Moment Diagram for Example Two

1. Simple beam—uniformly distributed load.

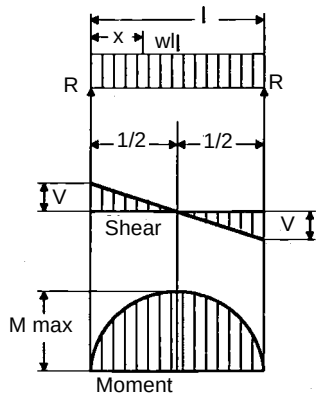

$$R = V \ldots = \frac{wl}{2}$$

$$Vx \ldots = w\left(\frac{1}{2} - x\right)$$

$$M \text{ max (at center)} \ldots = \frac{wl^2}{8}$$

$$Mx \ldots = \frac{wx}{2}(l - x)$$

$$\Delta \text{ max (at center)} \ldots = \frac{5wl^4}{384E}$$

$$\Delta x \ldots = \frac{wx}{24E}(l^3 - 2lx^2 + x^3)$$

LEGEND:

E	= modulus of elasticity	V	= shear
l	= span length	w	= uniform load on the span
M	= moment	x	= distance
R	= reaction		

2. Simple beam—load increasing uniformly to one end.

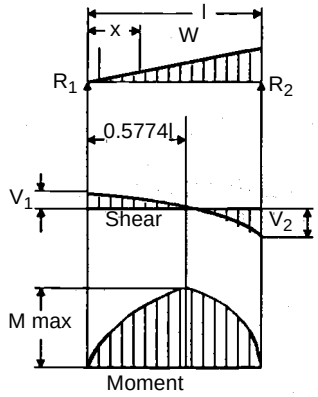

$$R_1 = V_1 \ldots = \frac{W}{3}$$

$$R_2 = V_2 \text{ max} \ldots = \frac{2W}{3}$$

$$Vx \ldots = \frac{W}{3} - \frac{Wx^2}{l^2}$$

$$M \text{ max (at } x = \frac{l}{\sqrt{3}} = 0.5774l) \ldots = \frac{2Wl}{9\sqrt{3}} = 0.1283\ Wl$$

$$Mx \ldots = \frac{Wx}{3l^2}(l^2 - x^2)$$

$$x = l\sqrt{1 - \sqrt{\frac{8}{15}}} = 0.5193l \ldots = 0.01304\frac{Wl^3}{E}$$

$$\Delta x \ldots = \frac{Wx}{180E(l^2)}(3x^4 - 10l^2x^2 + 7l^4)$$

LEGEND:

E	= modulus of elasticity	V	= shear
l	= span length	V_1	= shear at Point 1
M	= moment	V_2	= shear at Point 2
R_1	= reaction at Point 1	W	= applied load
R_2	= reaction at Point 2	x	= distance

Figure E-21. Shear and Moment Diagrams

3. Simple beam—load increasing uniformly to center.

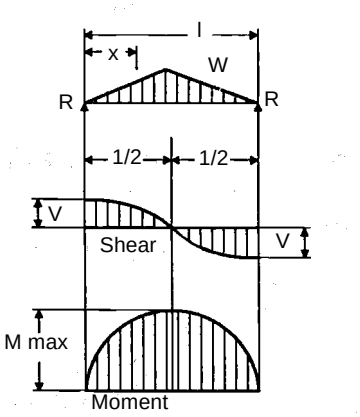

$R = V \ldots\ldots = \frac{W}{2}$

$Vx \text{ (when } x < \frac{l}{2}) \ldots\ldots = \frac{W}{2l^2}(l^2 - 4x^2)$

$M \text{ max (at center)} \ldots\ldots = \frac{Wl}{6}$

$Mx \text{ (when } x < \frac{l}{2}) \ldots\ldots = Wx\left(\frac{1}{2} - \frac{2x^2}{3l^2}\right)$

$\Delta \text{ max (at center)} \ldots\ldots = \frac{Wl^3}{60E}$

$\Delta x \ldots\ldots = \frac{Wx}{480E(l^2)}(5l^2 - 4x^2)^2$

LEGEND:

E = modulus of elasticity	V = shear
l = span length	V_1 = shear at Point 1
M = moment	V_2 = shear at Point 2
R_1 = reaction at Point 1	W = applied load
R_2 = reaction at Point 2	x = distance

4. Simple beam—uniform load partially distributed.

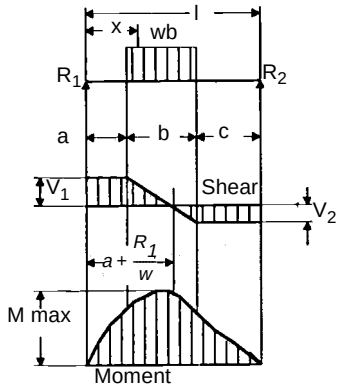

$R_1 = V_1 \text{ (max when } a < c) \ldots\ldots = \frac{wb}{2l}(2c + b)$

$R_2 = V_2 \text{ (max when } a > c) \ldots\ldots = \frac{wb}{2l}(2a + b)$

$Vx \text{ (when } x > a \text{ and } < [a + b]) \ldots\ldots = R_1 - w(x - a)$

$M \text{ max (at } x = a + \frac{R_1}{w}) \ldots\ldots = R_1\left(a + \frac{R_1}{2w}\right)$

$Mx \text{ (when } x < a) \ldots\ldots = R_1 x$

$Mx \text{ (when } x > a \text{ and } < [a + b]) \ldots\ldots = R_1 x - \frac{w}{2}(x - a)^2$

$Mx \text{ (when } x > [a + b]) \ldots\ldots = R_2(l - x)$

LEGEND:

a = distance	R_2 = reaction at Point 2
b = distance	V_1 = shear at Point 1
c = distance	V_2 = shear at Point 2
l = span length	w = uniform load on the span
M = moment	x = distance
R_1 = reaction at Point 1	

Figure E-21. Shear and Moment Diagrams (continued)

5. Simple beam—uniform load partially distributed at one end.

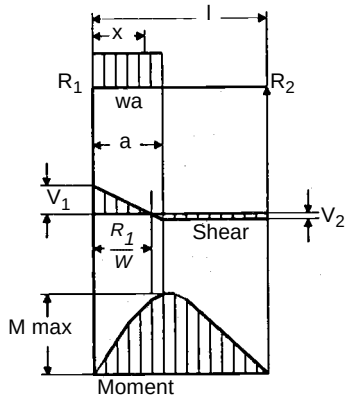

$R_1 = V_1 \, max \ldots\ldots = \frac{wa}{2l}(2l - a)$

$R_2 = V_2 \ldots\ldots = \frac{wa^2}{2l}$

$V \, (when \; x > a) \ldots\ldots = R_1 - wx$

$M \, max \, (at \; x = \frac{R_1}{w}) \ldots\ldots = \frac{R_1^2}{2w}$

$Mx \, (when \; x < a) \ldots\ldots = R_1 x - \frac{wx^2}{2}$

$Mx \, (when \; x > a) \ldots\ldots = R_2(l - x)$

$\Delta x \, (when \; x < a) \ldots\ldots = \frac{wx}{24El}[a^2(2l - a)^2 - 2ax^2(2l - a) + lx^3]$

$\Delta x \, (when \; x > a) \ldots\ldots = \frac{wa^2(l - x)}{24El}(4xl - 2x^2 - a^2)$

LEGEND:

a = distance
E = modulus of elasticity
l = span length
M = moment
R_1 = reaction at Point 1
R_2 = reaction at Point 2
V_1 = shear at Point 1
V_2 = shear at Point 2
w = uniform load on the span
x = distance

6. Simple beam—uniform load partially distributed at each end.

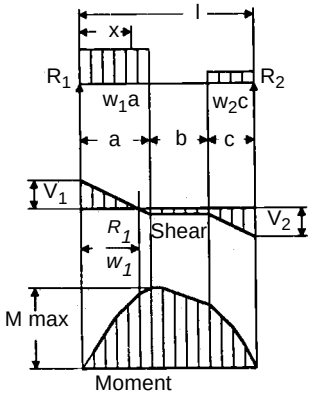

$R_1 = V_1 \ldots\ldots = \frac{w_1 a(2l - a) + w_2 c^2}{2l}$

$R_2 = V_2 \ldots\ldots = \frac{w_2 c(2l - c) + w_1 a^2}{2l}$

$Vx \, (when \; x < a) \ldots\ldots = R_1 - w_1 x$

$Vx \, (when \; x > a \; and < [a + b]) \ldots\ldots = R_1 - R_2$

$Vx \, (when \; x > [a + b]) \ldots\ldots = R_2 - w_2(l - x)$

$M \, max \, (at \; x = \frac{R_1}{w_1} \; when \; R_1 < w_1 a) \ldots\ldots = \frac{R_1^2}{2w_1}$

$M \, max \, (at \; x = l - \frac{R_2}{w_2} \; when \; R_2 < w_2 c) \ldots\ldots = \frac{R_2^2}{2w_2}$

$Mx \, (when \; x < a) \ldots\ldots = R_1 x - \frac{w_1 x^2}{2}$

$Mx \, (when \; x > a \; and < [a + b]) \ldots\ldots = R_1 x - \frac{w_1 a}{2}(2x - a)$

$Mx \, (when \; x > [a + b]) \ldots\ldots = R_2(l - x) - \frac{w_2(l - x)^2}{2}$

LEGEND:

a = distance
b = distance
c = distance
l = span length
M = moment
R_1 = reaction at Point 1
R_2 = reaction at Point 2
V = shear
V_1 = shear at Point 1
V_2 = shear at Point 2
w_1 = uniform load at Point 1
w_2 = uniform load at Point 2
x = distance

Figure E-21. Shear and Moment Diagrams (continued)

7. Simple beam—concentrated load at center.

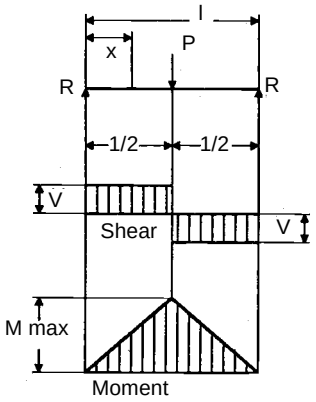

$R = V$ . . . . . $= \frac{P}{2}$

M max (at point of load) . . . . . $= \frac{Pl}{4}$

Mx (when $x < \frac{1}{2}$) . . . . . $= \frac{Px}{2}$

Δ max (at point of load) . . . . . $= \frac{Pl^3}{48E}$

Δx (when $x < \frac{1}{2}$) . . . . . $= \frac{Px}{48E}(31^2 - 4x^2)$

LEGEND:

E = modulus of elasticity	R = reaction
l = span length	V = shear
M = moment	x = distance
P = concentrated load	

8. Simple beam—concentrated load at any point.

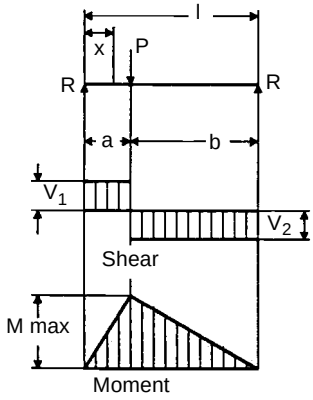

$R_1 = V_1$ (max when $a < b$) . . . . . $= \frac{Pb}{l}$

$R_2 = V_2$ (max when $a > b$) . . . . . $= \frac{Pa}{l}$

M max (at point of load) . . . . . $= \frac{Pab}{l}$

Mx (when $x < a$) . . . . . $= \frac{Pbx}{l}$

Δ max (at $x = \sqrt{\frac{a(a+2b)}{3}}$ when $a > b$) . . . $= \frac{Pab(a+2b)\sqrt{3a(2+2b)}}{3El}$

Δa (at point of load) . . . . . $= \frac{Pa^2b^2}{3El}$

Δx (when $x < a$) . . . . . $= \frac{Pbx}{6El}(l^2 - b^2 - x^2)$

LEGEND:

E = modulus of elasticity	R_2 = reaction at Point 2
l = span length	V_1 = shear at Point 1
M = moment	V_2 = shear at Point 2
P = concentrated load	x = distance
R_1 = reaction at Point 1	

Figure E-21. Shear and Moment Diagrams (continued)

9. Simple beam—two equal concentrated loads symmetrically placed.

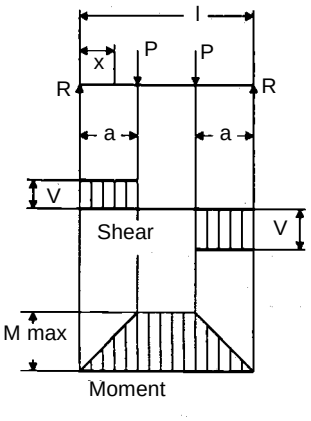

$R = V$ . . . . . $= P$

M max (between loads) . . . . . $= Pa$

Mx (when $x < a$) . . . . . $= Px$

Δ max (at center) . . . . . $= \frac{Pa}{24E}(3l^2 - 4a^2)$

Δx (when $x < a$ . . . . . $= \frac{Px}{6E}(3la - 3a^2 - x^2)$

Δx (when $x > a$ and $< [l - a]$) . . . . . $= \frac{Pa}{6E}(3lx - 3x^2 - a^2)$

LEGEND:

a	= distance	P	= concentrated load
E	= modulus of elasticity	R	= reaction
l	= span length	V	= shear
M	= moment	x	= distance

10. Simple beam—two equal concentrated loads unsymmetrically placed.

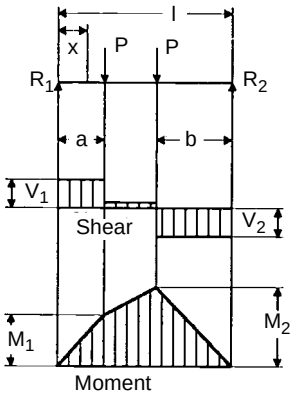

$R_1 = V_1$ (max when $a < b$) . . . . . $= \frac{P}{l}(l - a + b)$

$R_2 = V_2$ (max when $a > b$) . . . . . $= \frac{P}{l}(l - b + a)$

Vx (when $x > a$ and $< [l - b]$) . . . . . $= \frac{P}{l}(b - a)$

M_1 (max when $a > b$) . . . . . $= R_1a$

M_2 (max when $a < b$) . . . . . $= R_2b$

Mx (when $x < a$) . . . . . $= R_1x$

Mx (when $x > a$ and $< [l - b]$) . . . . . $= R_1x - P(x - a)$

LEGEND:

a	= distance	M_1	= moment at Point 1	R_2	= reaction at Point 2
b	= distance	M_2	= moment at Point 2	V_1	= shear at Point 1
l	= span length	P	= concentrated load	V_2	= shear at Point 2
M	= moment	R_1	= reaction at Point 1	x	= distance

Figure E-21. Shear and Moment Diagrams (continued)

11. Simple beam—two unequal concentrated loads unsymmetrically placed.

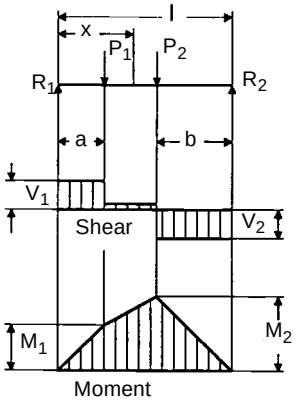

$R_1 = V_1 \ldots = \frac{P_1(l-a) + P_2 b}{l}$

$R_2 = V_2 \ldots = \frac{P_1 a + P_2(l-b)}{l}$

$Vx \text{ (when } x > a \text{ and } < [l - b]) \ldots = R_1 - P_1$

$M_1 \text{ (max when } R_1 < P_1) \ldots = R_1 a$

$M_2 \text{ (max when } R_2 < P_2) \ldots = R_2 b$

$Mx \text{ (when } x < a) \ldots = R_1 x$

$Mx \text{ (when } x > a \text{ and } < [l - b]) \ldots = R_1 x - P_1(x - a)$

LEGEND:

a	= distance	P_1	= concentrated load at Point 1	V_2	= shear at Point 2
b	= distance	P_2	= concentrated load at Point 2	x	= distance
l	= span length	R_1	= reaction at Point 1		
M_1	= moment at Point 1	R_2	= reaction at Point 2		
M_2	= moment at Point 2	V_1	= shear at Point 1		

12. Beam fixed at one end, supported at other—uniformly distributed load.

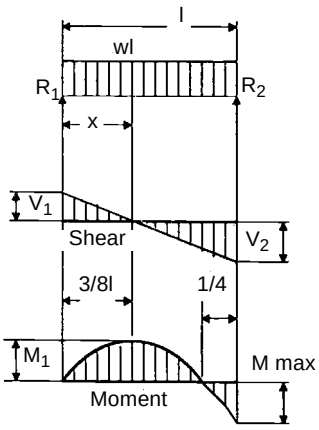

$R_1 = V_1 \ldots = \frac{3wl}{8}$

$R_2 = V_2 \text{ max} \ldots = \frac{5wl}{8}$

$Vx \ldots = R_1 - wx$

$M \text{ max} \ldots = \frac{wl^2}{8}$

$M_1 \left(\text{at } x = \frac{3}{8}l\right) \ldots = \frac{9}{128} wl^2$

$Mx \ldots = R_1 x - \frac{wx^2}{2}$

$\Delta \text{ max} \left(\text{at } x = \frac{l}{16}(1 + \sqrt{33}) = 0.4215l\right) \ldots = \frac{wl^4}{185E}$

$\Delta x \ldots = \frac{wx}{48E}(l^3 - 3lx^2 + 2x^3)$

LEGEND:

E	= modulus of elasticity	R_2	= reaction at Point 2		
l	= span length	V_1	= shear at Point 1		
M	= moment	V_2	= shear at Point 2		
M_1	= moment at Point 1	w	= uniform load on the span		
R_1	= reaction at Point 1	x	= distance		

Figure E-21. Shear and Moment Diagrams (continued)

Appendix F

Classification Examples

This appendix contains classification examples using the analytical classification procedure. Refer to *Chapter 3* for a detailed discussion of the equations.

NOTATIONS

F-1. This appendix contains examples for classifying a bridge using the analytical classification procedure. The following notations are used in this appendix:

A = *net area of the section, in square inches, or compression area of the arch ring segment, in square inches*

A_{angles} = *angle area*

$A_{angles_{net}}$ = *net angle area*

A_b = *area of one reinforcing bar*

A_c = *area of the concrete resisting compression, in square inches*

A_f = *cross-sectional flange area, in square inches*

$A_{f(1)}$ = *area of girder flange, in square inches*

A_{fa} = *area of angles connecting the flange to the web on a girder, in square inches*

$A_{flanges}$ = *flange area*

A_g = *gross cross-sectional area, in square inches*

A_{girder} = *girder area*

A_n = *net area of the bottom truss chord, in square inches*

A_p = *cross-sectional area of a bar or tendon, in square inches*

A_{plates} = *plate area*

$A_{plates_{net}}$ = *net plate area*

A_{ps} = *total area of the prestressed steel in the bottom half of the beam at midspan, in square inches*

A_{rivets} = *rivet area*

A_s = *area of bearing plates, square inches*

A_{st} = *area of tension steel, in square inches*

A_t = *total area of the tension chord of one truss, in square inches*

A_v = *effective shear area, in square inches*

A_w = *area of the web, in square inches*

A_{web} = *web area*

b = *arch-rib width, in inches*
b' = *beam width, in inches*
b'' = *effective flange width, in inches*
b_e = *effective slab width, in feet*
b_f = *flange width, in inches*
b_r = *curb-to-curb roadway width, in feet*
b_s = *stringer or slab width, in inches*
c = *allowable compressive force, in kips*
C = *reduction factor*
C_c = *buckling coefficient*
C_v = *minimum spacing between vehicles in adjacent lanes, in feet*
d = *stringer depth, in inches*
d' = *distance from the top of the beam to the center of the tension steel, in inches*
d_f = *depth of fill above the arch ring, in feet*
d_i = *inside web depth of the girder measured between the top and bottom pieces*
d_o = *depth of the compression zone, in inches*
d_{ps} = *distance from the top of the slab to the center of the prestressed steel, in inches*
d_s = *distance from the top of the slab to the center of the nonprestressed steel, in inches*
d_w = *total depth of the girder, in inches*
$f'c$ = *28-day strength of the concrete, in ksi*
f_{DL} = *dead-load compression for steel, in ksi*
f_{ps} = *average stress in the prestressed steel at the design load, in ksi*
f_{pu} = *ultimate strength of the prestressed steel, in ksi*
f_{sy} = *yield strength of the nonprestressed reinforcing steel, in ksi*
f_t = *allowable tension in the suspended cable, in ksi*
F' = *smaller of tensile or compressive force on the chords, in kips*
F_a = *allowable axial compression, in ksi*
F_b = *maximum allowable bending stress of the member, in ksi*
F_c = *allowable axial compressive stress, in ksi*
F_{DL} = *stress induced in the steel by the dead-load moment, in ksi*
F_{LL} = *allowable live-load stress for steel or concrete, in ksi*
F_t = *allowable tension on the bottom chord, in ksi*
F_v = *maximum allowable shear stress, in ksi*
F_y = *yield strength of the reinforcing steel, in ksi*
H_{DL} = *redundant horizontal thrust, in ksi*
H_{LL} = *horizontal-loading component, in kips*
I_c = *moment of inertia for the combined beam section, in inches*
I_o = *moment of inertia for geometric portions of the beam, in inches*^{4}

I_s = *moment of inertia for the combined beam section, in inches*^{4}
K = *material constant*
L = *span length, in feet*
L_{eff} = *equivalent span length*
L_x = *unbraced length in the vertical direction, in inches*
L_y = *unbraced length in the horizontal direction, in inches*
m = *moment capacity of a component, in kip-feet*
m_{DL} = *dead-load moment per component, in kip-feet*
m_{LL} = *live-load moment per component, in kip-feet*
M = *total moment capacity, in kip-feet*
M_{LL} = *total live-load moment per lane, in kip-feet*
N_1 = *maximum effective number of stringers for one-lane traffic*
$N_{1,2}$ = *the smaller value of* N_1 *and* N_2
N_2 = *maximum effective number of stringers for two-lane traffic*
N_S = *total number of stringers in the span*
N_t = *number of trusses*
P_{cLL} = *live-load capacity of the bridge, in kips*
P_e = *effective load per track or line of wheels, in kips*
P_{LL} = *live-load capacity of the bridge, in kips*
r = *minimum radius of gyration of the member, in inches*
r_m = *modular ratio*
r_x = *radius of gyration for the x axis*
r_y = *radius of gyration for the y axis*
R = *rise of the arch, in feet*
R_{ps} = *prestressed reinforcement ratio*
R_r = *reinforcement ratio*
R_s = *steel ratio, in square inches*
S = *section modulus, in cubic inches*
S_b = *lateral-brace spacing, in feet*
$S_{composite}$ = *section modulus of the composite section, in cubic inches*
S_e = *center-to-center track or wheel spacing, in feet*
S_f = *center-to-center floor-beam spacing, in feet*
S_g = *center-to-center girder spacing, in feet*
S_{girder} = *section modulus of the girder*
S_r = *rib spacing, in feet*
S_s = *stringer spacing, in feet*
S_{steel} = *section modulus of steel, in cubic inches*
S_t = *center-to-center truss spacing, in feet*
$S_{T\text{-}B}$ = *center-to-center T-beam spacing, in inches*
t = *thickness of the arch ring*
t_d = *average deck thickness, in inches*

t_f = *flange thickness, in inches*
T = *tensile force on the bottom chord, in kips*
T_{DL} = *dead-load component of the cable capacity*
T_1 = *tracked vehicles, one-lane traffic*
T_2 = *tracked vehicles, two-lane traffic*
T_{LL} = *live-load capacity of the suspended cable, in kips*
v = *shear capacity per member, in kips*
v_{DL} = *dead-load shear per member, in kips*
v_{LL} = *live-load shear capacity per member, in kips*
V_{LL} = *allowable vehicle shear for one lane, in kips*
w_b = *uniform dead load due to lateral bracing of floor stringers, in kpf*
w_{DL} = *dead-load capacity per foot of member, in kips*
w_{FS} = *uniform dead load on the girder due to the deck, stringers, and floor beams, in kpf*
w_g = *uniform dead load due to the girder itself, in kpf*
W_1 = *wheeled vehicles, one-lane traffic*
W_2 = *wheeled vehicles, two-lane traffic*
W_{DL} = *total dead-load weight per foot per member, in kips*
W_{LL} = *allowable live-load per member, in kips*
x = *impact factor*
x_r = *reduction factor*
$\bar{y}$ = *distance from the baseline to the neutral axis of the simple shape, in inches*
y_c = *centroid of the composite section, in inches*

TIMBER-STRINGER BRIDGE

F-2. In this example, *Table F-1, pages F-5* and *F-6,* shows the procedure for classifying a timber-stringer bridge and *Table F-2, page F-6,* contains a classification summary. *Figure F-1, page F-7,* shows a sample bridge-reconnaissance report for a timber-stringer bridge. Information from an on-site inspection is as follows:

- The bridge is in good condition.
- All members are in good condition.
- The piling and abutment end beams have been treated to reduce deterioration. Therefore, substructure is not rated.
- The bridge is about two years old.
- Each of the three spans are constructed identically, so the longer (17-foot) span will be classified as the weakest span.
- The timber species is dense, select-structural Douglas fir.
- The horizontal splits are no longer than 6 inches.

Table F-1. Classification Procedure for a Timber-Stringer Bridge

Step	Equation/Procedure	Consideration	Computation
1	Allowable stress (dense, select-structural Douglas fir)	para 3-46 *Table C-1*	$F_b = 1.9\ ksi\ (stringers)$ $= (1.33)(1.9) = 2.53\ ksi$
2	Number of effective members	para 3-32, 3-49 *Table 3-3*	$S_s = 3\ ft$, nail-laminated deck (≥6 in): One lane: $N_1 = \frac{10}{S_s} = \frac{10}{3} = 3.33$ Two lanes: $N_2 = \frac{8.5}{S_s} = \frac{8.5}{3} = 2.83$
3	Equivalent span length	para 3-42	$L_{eff} = (0.7)(17\ ft) = 11.9\ ft\ (interior\ span)$
4	$m = \frac{F_b S}{12}$	para 3-34, 3-49 (eq 3-2) Use *Tables C-4* and *C-5* to find S.	$S = 432\ in^3$ $m = \frac{(2.53)(432)}{12} = 91.08\ kip\text{-}feet$
5	Total dead-load weight of the bridge components	para 3-29, 3-35 Compute for an average 1-ft length of bridge span.	$W_{DL} = (9)\left(\frac{8\times18}{144}\right)(32) + \left(6\times\frac{1}{12}\right)(50)(24) + \left(2\times\frac{1}{12}\right)(150)(24) + 100 = 1{,}588\ lb/ft$ $W_{DL} = \frac{1{,}588\ lb/ft}{1{,}000} = 1.59\ kpf$
6	$w_{DL} = \frac{W_{DL}}{N_S}$	para 3-29 (eq 3-1)	$w_{DL} = \frac{W_{DL}}{N_S} = \frac{1.59\ kpf}{9} = 0.176\ kpf$
7	$m_{DL} = \frac{w_{DL}L^2}{8}$	para 3-35 (eq 3-3) $L = L_{eff} = 11.9\ ft$	$m_{DL} = \frac{(0.176)(11.9^2)}{8} = 3.12\ kip\text{-}feet$
8	$m_{LL} = \frac{m - m_{DL}}{1 + x}$	para 3-36 (eq 3-4) $x = 0\ (timber)$	$m_{LL} = \frac{91.08 - 3.12}{1} = 87.96\ kip\text{-}feet$
9	$M_{LL} = N_{1,2}m_{LL}$	para 3-38 (eq 3-5)	One lane: $M_{LL} = (3.33)(87.96) = 292.91\ kip\text{-}feet$ Two lanes: $M_{LL} = (2.83)(87.96) = 248.93\ kip\text{-}feet$
10	Moment classification	*Appendix B* *Table B-2 or Figures B-1, B-2* para 3-43 $L = 11.9\ ft$	One lane: W150, T150 Two lanes: W150, T150
11	Allowable shear stress	para 3-46 *Table C-1*	$F_v = 0.085\ ksi\ (stringers)$ $= (1.33)(0.085) = 0.113\ ksi$
12	Effective shear area	*Table C-4*	$A_v = 96\ in^2$
13	$v = A_v F_v$	para 3-51 (eq 3-6)	$v = (96)(0.113) = 10.85\ kips$

Table F-1. Classification Procedure for a Timber-Stringer Bridge (continued)

Step	Equation/Procedure	Consideration	Computation
14	$v_{DL} = \frac{W_{DL}L}{2}\left(1 - \frac{d}{6L}\right)$	para 3-52 (eq 3-7)	$v_{DL} = \frac{(0.176)(11.9)}{2}\left(1 - \frac{18}{(6)(11.9)}\right) = 0.783\ kips$
15	$v_{LL} = v - v_{DL}$	para 3-53 (eq 3-8)	$v_{LL} = 10.85 - 0.783 = 10.07\ kips$
16	$V_{LL} = 5.33 v_{LL}\left[\frac{1}{0.6 + \left(\frac{2}{N_{1,2}}\right)}\right]$	para 3-54 (eq 3-9)	One lane: $V_{LL} = (5.33)(10.07)\left(\frac{1}{0.6 + \frac{2}{3.33}}\right) = 44.71\ kips$ Two lanes: $V_{LL} = (5.33)(10.07)\left(\frac{1}{0.6 + \frac{2}{2.83}}\right) = 41.07\ kips$
17	Shear classification	*Appendix B* *Table B-2* or *Figures B-3, B-4* $L = 11.9\ ft$	One lane: W43, T45 Two lanes: W35, T41
18	Deck classification (laminated plank)	para 3-57, 3-58, 3-59 *Figure 3-13*	$S = (0.75)(3\ ft) = 2.25\ ft = 27\ in$ with $t = 6\ in$ $\therefore$ class 50-150
19	Width classification	para 3-61 *Table 3-4*	One lane: W150, T150 Two lanes: W60, T60
20	Final classification	N/A	One lane: W43, T45 Two lanes: W35, T41

Table F-2. Classification Summary for a Timber-Stringer Bridge

Classification	W_1	W_2	T_1	T_2
Moment (step 10)	150	150	150	150
Shear (step 17)	43	35	45	41
Width (step 19)	150	60	150	60
Deck (step 18)	150	150	150	150
Final	43	35	45	41

NOTE: For one-lane bridges, the final classification is the smallest value of the moment, shear, and deck classifications. Post a width-restriction sign if the width classification is smaller than the final classification. For two-lane bridges, the final classification is the smallest value of the moment, shear, width, and deck classifications.

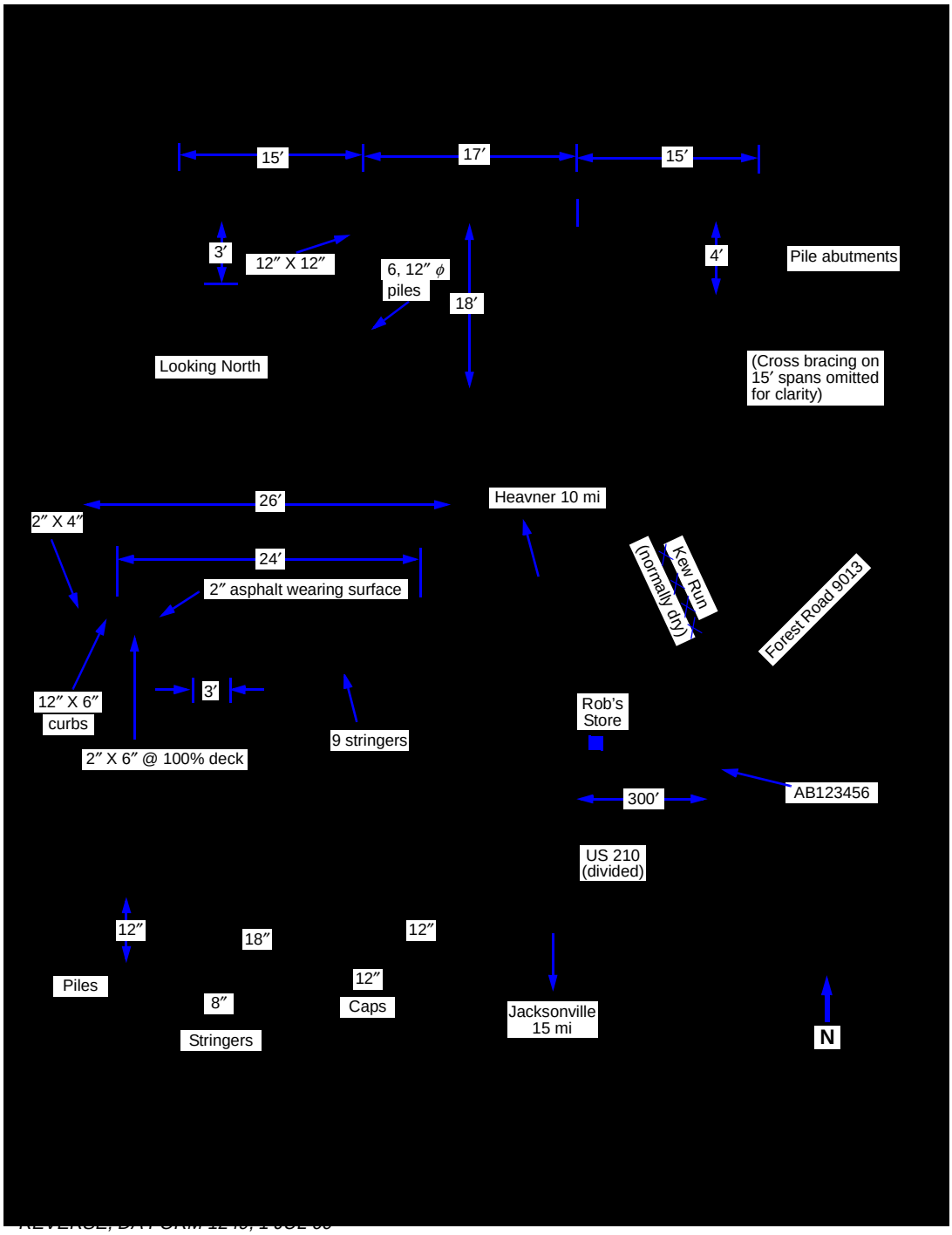

Figure F-1. Sample Bridge-Reconnaissance Report for a Timber-Stringer Bridge

STEEL-STRINGER BRIDGE

F-3. In this example, *Table F-3* shows the procedure for classifying a steel-stringer bridge and *Table F-4* contains a classification summary. *Figure F-2, page F-10*, shows a sample bridge-reconnaissance report for a steel-stringer bridge. Information from an on-site inspection is as follows:

- The bridge is in excellent condition.
- The date built is unknown.
- The steel-stringer sections were identified by comparing dimensions with the section properties found in *Appendix D*.
- The concrete deck does not act to increase the moment capability of the stringers. Therefore, it is noncomposite.

Table F-3. Classification Procedure for a Steel-Stringer Bridge

Step	Equation/Procedure	Consideration	Computation
1	Yield stress Allowable stress	para 3-63 *Tables 3-5, 3-6*	$F_y = 30\ ksi$ $F_b = 0.75F_y = (0.75)(30) = 22.5\ ksi$
2	$m = \frac{F_b S}{12}$	para 3-64 (eq 3-2) Use *Table D-2* to find S.	Section = W36x300 $m = \frac{(22.5)(1{,}110)}{12} = 2{,}081.25\ kip\text{-}feet$
3	Total dead-load weight of the bridge components	para 3-29, 3-35 Compute for an average 1-ft length of bridge span. For W36x300, *unit weight stringers = 300 lb/ft* *unit weight concrete = 150 lb/ft^3* *unit weight braces = 42.7 lb/ft*	$W'_{DL} = (5)(300) + \left[\left(7 \times \frac{1}{12}\right)(28) + (2)(1)(4.33)\right]$ $(150) + (20)(42.7) + 20 = 6{,}123\ lb/ft$ $W'_{DL} = \frac{6{,}123\ lb/ft}{1{,}000} = 6.12\ kpf$
4	$w_{DL} = \frac{W'_{DL}}{N_S}$	para 3-29 (eq 3-1)	$w_{DL} = \frac{W'_{DL}}{N_S} = \frac{6.12}{5} = 1.22\ kpf$
5	$m_{DL} = \frac{w_{DL} L^2}{8}$	para 3-35 (eq 3-3)	$m_{DL} = \frac{(1.22)(72^2)}{8} = 790.56\ kip\text{-}feet$
6	$m_{LL} = \frac{m - m_{DL}}{1 + x}$	para 3-36 (eq 3-4) *x = 0.15 (steel)*	$m_{LL} = \frac{2{,}081 - 790.56}{1 + 0.15} = 1{,}122.12\ kip\text{-}feet$

Table F-3. Classification Procedure for a Steel-Stringer Bridge (continued)

Step	Equation/Procedure	Consideration	Computation
7	Number of effective members	para 3-32 *Table 3-3*	$S_s = 7\ ft\ 10\ in = 7.83\ ft$ and concrete deck on steel I-beams: One lane: $N_1 = \frac{14}{S_s} = \frac{14}{7.83} = 1.79$ Two lanes: $N_2 = \frac{11}{S_s} = \frac{11}{7.83} = 1.40$
8	$M_{LL} = N_{1,2} m_{LL}$	para 3-38 (eq 3-5)	One lane: $M_{LL} = (1.79)(1{,}122.12) = 2{,}008.59\ kip\text{-}feet$ Two lanes: $M_{LL} = (1.40)(1{,}122.12) = 1{,}570.97\ kip\text{-}feet$
9	Moment classification	*Appendix B* *Table B-2 or* *Figures B-1, B-2* $L = 72\ ft$	One lane: W65, T60 Two lanes: W50, T45
10	Deck classification	Seldom critical (para 3-65)	N/A
11	Width classification	*Table 3-4*	One lane: W150, T150 Two lanes: W100, T100
12	Final classification	para 3-66	One lane: W65, T60 Two lanes: W50, T45

Table F-4. Classification Summary for a Steel-Stringer Bridge

Classification	W_1	W_2	T_1	T_2
Moment (step 9)	65	50	60	45
Width (step 11)	150	100	150	100
Final	65	50	60	45

NOTE: For one-lane bridges, the final classification is the smallest value of the moment, shear, and deck classifications. Post a width-restriction sign if the width classification is smaller than the final classification. For two-lane bridges, the final classification is the smallest value of the moment, shear, width, and deck classifications.

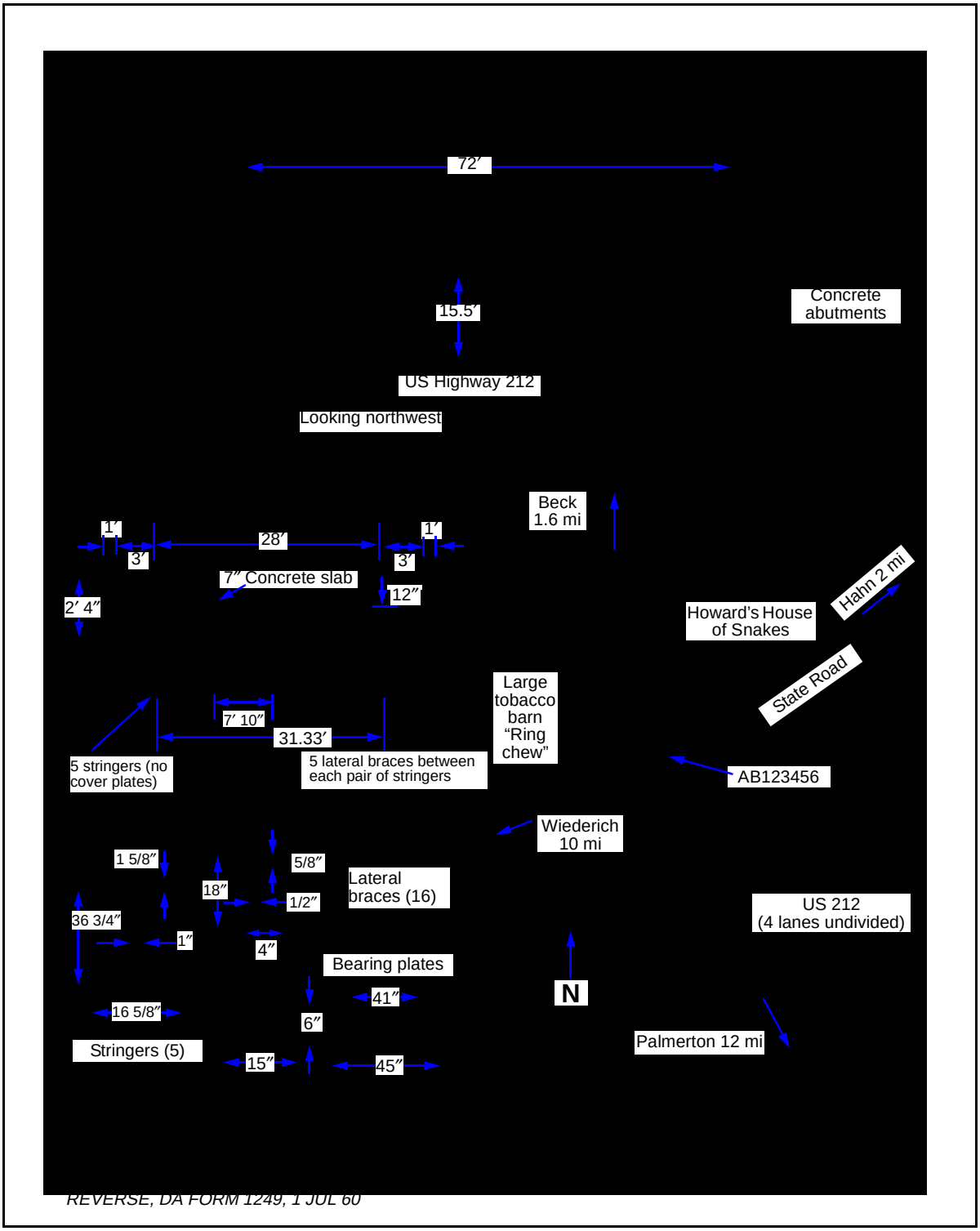

Figure F-2. Sample Bridge-Reconnaissance Report for a Steel-Stringer Bridge

COMPOSITE STEEL-CONCRETE STRINGER BRIDGE

F-4. In this example, *Table F-5, pages F-11* through *F-14*, shows the procedure for classifying a composite steel-concrete stringer bridge and *Table F-6, page F-14*, contains a classification summary. *Figure F-3, page F-15,* shows a sample bridge-reconnaissance report, and *Figure F-4, page F-16,* shows a composite section of this bridge. Information from an on-site inspection is as follows:

- The bridge is in excellent condition.
- Full lateral support of the stringers is provided by the connection with the concrete deck.
- The steel-stringer sections were constructed from A36 steel (36 ksi yield), according to civilian authorities.
- The concrete allowable stress is 4,000 psi ($f'c = 4{,}000\ psi;\ and\ r_m = 8$).
- $S_{composite}$ denotes the composite section modulus as determined according to *paragraph 3-75*.

Table F-5. Classification Procedure for a Composite Steel-Concrete Stringer Bridge

Step	Equation/Procedure	Consideration	Computation
1	Yield stress Allowable stress	para 3-63 A36 Steel *Table 3-6*	$F_y = 36\ ksi$ $F_b = 0.75Fy = (0.75)(36) = 27\ ksi$
2	Total dead-load weight of the bridge components	para 3-29, 3-35 Compute for an average 1-ft length of bridge span.	$W'_{DL} = \left[(8)\left(\frac{1}{12}\right)\right](150)(28\ ft) + (2)(2.2)(150) + 40 + (4)\left[(47.25)\left(\frac{1}{144}\right)\right](490) = 4{,}143.125\ lb/ft$ $W_{DL} = \frac{4{,}143.125\ lb/ft}{1{,}000} = 4.15\ kpf$
3	Number of effective members	para 3-32 *Table 3-3*	$S_s = 8.33\ ft$: One lane: $N_1 = \frac{14}{S_s} = \frac{14}{8.33} = 1.68$ Two lanes: $N_2 = \frac{11}{S_s} = \frac{11}{8.33} = 1.32$
4	Equivalent span length	para 3-42	$L_{eff} = (0.7)(80) = 56\ ft\ (for\ interior\ span)$
5	$w_{DL} = \frac{W'_{DL}}{N_s}$	para 3-29 (eq 3-1)	$w_{DL} = \frac{W'_{DL}}{N_s} = \frac{4.15}{4} = 1.0375\ kfp$
6	$m_{DL} = \frac{w_{DL}L^2}{8}$	para 3-35 (eq 3-3) $L = L_{eff} = 56\ ft$	$m_{DL} = \frac{(1.0375)(56^2)}{8} = 406.7\ kip\text{-}feet$

Table F-5. Classification Procedure for a Composite Steel-Concrete Stringer Bridge (continued)

<table>
<tr><th>Step</th><th>Equation/Procedure</th><th>Consideration</th><th>Computation</th></tr>
<tr><td>7</td><td>Section modulus:
$S_{steel} = \frac{I_s}{y_s}$
$y_c = \frac{\Sigma A\bar{y}}{\Sigma A}$
$I_s = \Sigma I_o + \Sigma A\bar{y}^2$
$I_o = \frac{bd^3}{12}$</td><td>The values for $\bar{y}$ are given.
para 3-72</td><td>
<table>
<tr><th>Section</th><th>A</th><th>$\bar{y}$</th><th>A$\bar{y}$</th></tr>
<tr><td>Bottom flange</td><td>22.50</td><td>0.9375</td><td>21.09</td></tr>
<tr><td>Web</td><td>18.00</td><td>25.8800</td><td>465.84</td></tr>
<tr><td>Top flange</td><td>6.75</td><td>50.1600</td><td>338.58</td></tr>
<tr><td>Σ =</td><td>47.25</td><td>—</td><td>825.51</td></tr>
</table>
$y_c = \frac{825.51}{47.25} = 17.47\ in$
$I_o\ top\ flange = \frac{(12)(0.5625^3)}{12} = 0.1780$
$I_o\ web = \frac{(0.375)(48^3)}{12} = 3{,}456$
$I_o\ bottom\ flange = \frac{(12)(1.875^3)}{12} = 6.59$
<table>
<tr><th>Section</th><th>A</th><th>$\bar{y}$</th><th>A$\bar{y}^2$</th><th>I_o</th></tr>
<tr><td>Bottom flange</td><td>22.50</td><td>16.53</td><td>6,147.92</td><td>6.5900</td></tr>
<tr><td>Web</td><td>18.0</td><td>8.41</td><td>1,273.11</td><td>3,456.0000</td></tr>
<tr><td>Top flange</td><td>6.75</td><td>32.69</td><td>7,231.29</td><td>0.1780</td></tr>
<tr><td>Σ =</td><td>—</td><td>—</td><td>14,652.32</td><td>3,462.7700</td></tr>
</table>
$I_s = 3{,}462.77 + 14{,}652.32 = 18{,}115.09\ in^4$
$S_{steel} = \frac{18{,}115.09}{17.47} = 1{,}036.9\ in^3$
</td></tr>
<tr><td>8</td><td>Effective concrete-flange width</td><td>para 3-73</td><td>Lesser value of:
$b'' = \frac{1}{4}(0.8)(80) \times 12 = 192\ in$
$b'' = (12)(7) = 84\ in$
$b'' = (8.33)(12) = 100\ in$
$\therefore b'' = 84\ in$</td></tr>
<tr><td>9</td><td>Equivalent steel-flange width</td><td>para 3-74
(eq 3-12)
Table 3-7</td><td>$r_m = 8\ \ (for\ f'c = 4{,}000\ psi)$
$b' = \frac{84}{8} = 10.5\ in$</td></tr>
</table>

Table F-5. Classification Procedure for a Composite Steel-Concrete Stringer Bridge (continued)

<table>
<tr><th>Step</th><th>Equation/Procedure</th><th>Consideration</th><th>Computation</th></tr>
<tr><td>10</td><td>Section modulus of composite section:
$S_{composite} = \frac{I_c}{y_c}$
$y_c = \frac{\sum A\bar{y}}{\sum A}$
$I_c = \sum I_o + \sum A\bar{y}^2$
$I_o = \frac{bd^3}{12}$</td><td>The values for $\bar{y}$ are given.
para 3-75
Figure F-4</td><td>
<table>
<tr><th>Section</th><th>A</th><th>$\bar{y}$</th><th>A$\bar{y}$</th></tr>
<tr><td>Concrete</td><td>73.50</td><td>53.9400</td><td>3,964.59</td></tr>
<tr><td>Top flange</td><td>6.75</td><td>50.1600</td><td>338.58</td></tr>
<tr><td>Web</td><td>18.00</td><td>25.8800</td><td>465.84</td></tr>
<tr><td>Bottom flange</td><td>22.50</td><td>0.9375</td><td>21.09</td></tr>
<tr><td>Σ =</td><td>120.75</td><td>—</td><td>4,790.10</td></tr>
</table>
I_o concrete $= \frac{(10.5)(7^3)}{12} = 300.13$
I_o top flange $= \frac{(12)(0.5625^3)}{12} = 0.1780$
I_o web $= \frac{(0.375)(48^3)}{12} = 3{,}456$
I_o bottom flange $= \frac{(12)(1.875^3)}{12} = 6.59$
<table>
<tr><th>Section</th><th>A</th><th>$\bar{y}$</th><th>A$\bar{y}^2$</th><th>I_o</th></tr>
<tr><td>Concrete</td><td>73.50</td><td>14.27</td><td>14,967.02</td><td>300.1300</td></tr>
<tr><td>Top flange</td><td>6.75</td><td>10.49</td><td>742.77</td><td>0.1780</td></tr>
<tr><td>Web</td><td>18.00</td><td>13.79</td><td>3,422.95</td><td>3,456.0000</td></tr>
<tr><td>Bottom flange</td><td>22.50</td><td>38.73</td><td>33,750.29</td><td>6.5900</td></tr>
<tr><td>Σ =</td><td>—</td><td>—</td><td>52,883.03</td><td>3,762.8980</td></tr>
</table>
$I_c = 3{,}762.9 + 52{,}883.03 = 56{,}645.93\ in^4$
$S_{composite} = \frac{56{,}654.93}{39.67} = 1{,}427.93\ in^3$
</td></tr>
<tr><td>11</td><td>$F_{DL} = \frac{m_{DL}12}{S_{steel}}$</td><td>para 3-76
(eq 3-13)</td><td>$F_{DL} = \frac{(406.7)(12)}{1{,}036.9} = 4.71\ ksi$</td></tr>
<tr><td>12</td><td>$m_{LL} = \frac{(F_b - F_{DL})S_{composite}}{(1+x)12}$</td><td>para 3-77
(eq 3-14)
$x = 0.15$ (steel)</td><td>$m_{LL} = \frac{(27 - 4.71)(1{,}427.93)}{(1+0.15)(12)} = 2{,}306.42$ kip-feet</td></tr>
</table>

Table F-5. Classification Procedure for a Composite Steel-Concrete Stringer Bridge (continued)

Step	Equation/Procedure	Consideration	Computation
13	$M_{LL} = N_{1,2} m_{LL}$	para 3-38 (eq 3-5)	One lane: $M_{LL} = (1.68)(2{,}306.29) = 3{,}874.57$ *kip-feet* Two lanes: $M_{LL} = (1.32)(2{,}306.29) = 3{,}044.30$ *kip-feet*
14	Moment classification	*Appendix B* *Table B-2 or* *Figures B-1, B-2* $L = L_{eff} = 56$ *ft*	One lane: W150, T150 Two lanes: W150, T150
15	Width classification	*Table 3-4*	One lane: W150, T150 Two lanes: W100, T100
16	Final classification	para 3-79	One lane: W150, T150 Two lanes: W100, T100

Table F-6. Classification Summary for a Composite Steel-Concrete Stringer Bridge

Classification	W_1	W_2	T_1	T_2
Moment (step 14)	150	150	150	150
Width (step 15)	150	100	150	100
Final	150	100	150	100

NOTE: For one-lane bridges, the final classification is the smallest value of the moment, shear, and deck classifications. Post a width-restriction sign if the width classification is smaller than the final classification. For two-lane bridges, the final classification is the smallest value of the moment, shear, width, and deck classifications.

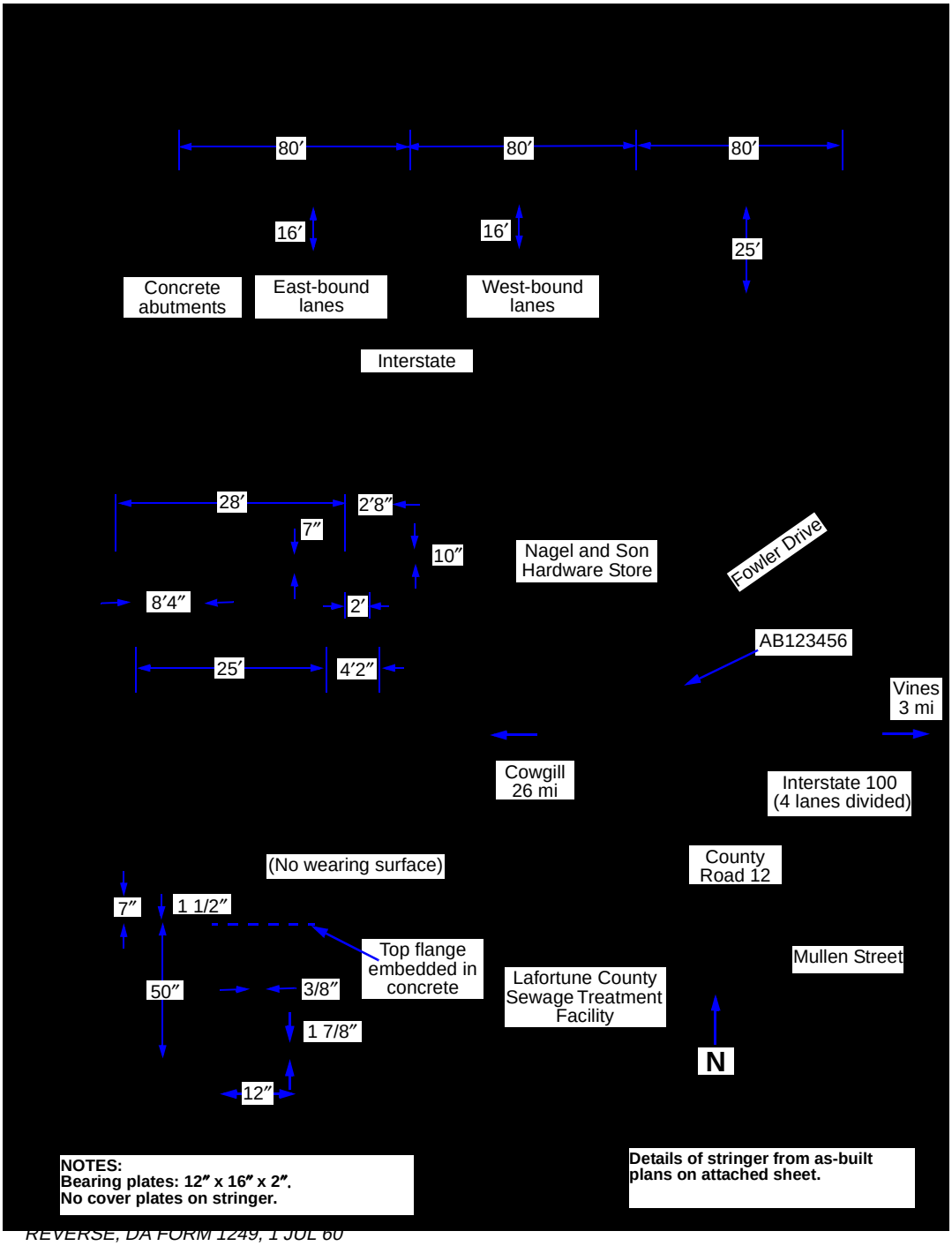

Figure F-3. Sample Bridge-Reconnaissance Report for a Composite Steel-Concrete Stringer Bridge

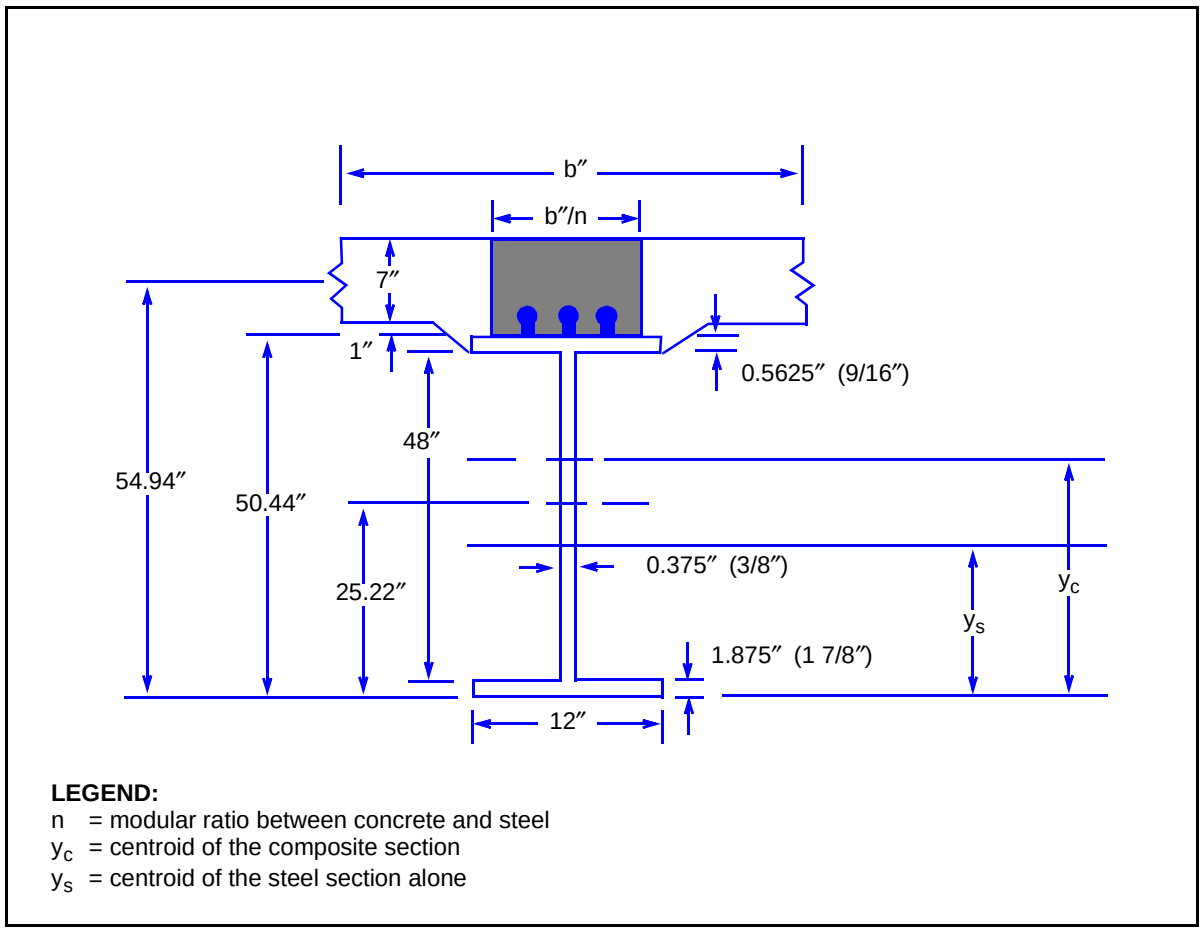

Figure F-4. Composite Section

STEEL-GIRDER BRIDGE

F-5. In this example, *Table F-7, pages F-17* through *F-20*, shows the procedure for classifying a steel-girder bridge, and *Table F-8, page F-21*, contains a classification summary for a steel-girder bridge. *Figure F-5, page F-22*, shows a sample bridge-reconnaissance report for a steel-girder bridge. *Figures F-6* and *F-7, page F-23*, show details of the girder. According to civilian authorities, the deck is a concrete slab constructed of noncomposite construction.

Table F-7. Classification Procedure for a Steel-Girder Bridge

Step	Equation/Procedure	Consideration	Computation
1	Yield stress Allowable stress	para 3-63 *Tables 3-5, 3-6*	$F_y = 30$ *ksi (unknown type and date)* $F_b = 0.75F_y = (0.75)(30) = 22.5$ *ksi*
2	Effective number of girders: One lane: $N_1 = \frac{2S_g}{S_g + b_r - 10}$ Two lanes: $C_v = b_r - 2S_e - 3 \geq 2.0$ *ft* $N_2 = \frac{S_g}{S_g + b_r - 17 - C_v}$	para 3-83 (eq 3-15, 3-16) para 3-84 (eq 3-17)	One lane: $N_1 = \frac{(2)(30)}{30 + 24 - 10} = 1.36$ Two lanes: $C_v = 24 - (2)(7) - 3 = 7$ $N_2 = \frac{30}{30 + 24 - 17 - 7} = 1.0$
3	$S_{girder} = d_w\left(A_{f(1)} + \frac{A_w}{6}\right) + d_i A_{fa}$	Deduct cross-sectional area of rivet holes. Use approximate section modulus equation. (eq D-7)	$A_{f(1)} = (15)(3) + (2)(6 \times 0.75) + (2)(1)(3.75)$ $= 61.5\ in^2$ $A_w = (60)(1) - (10)(1)(1) = 50\ in^2$ $A_{fa} = (2)(7.25)(0.75) - (2)(1)(2.5) = 5.88\ in^2$ $S_{girder} = 61\left(46.5 + \frac{50}{6}\right) + (45)(5.88) = 3{,}609.41\ in^3$
4	$m = \frac{F_b S}{12}$	para 3-86 (eq 3-18)	$m = \frac{(22.5)(3{,}609.41)}{12} = 6{,}767.64$ *kip-feet*
5	Area girder	para 3-87	$A_{flanges} = (6)(15)(1) = 90\ in^2$ $A_{angles} = (4)(9.94) = 39.76\ in^2$ $A_{web} = (60)(1) = 60\ in^2$ $A_{girder} = (90 + 39.76 + 60) = 189.7\ in^2$

Table F-7. Classification Procedure for a Steel-Girder Bridge (continued)

Step	Equation/Procedure	Consideration	Computation
6	Dead load per girder	para 3-87 (eq 3-19 through 3-22)	$w_{FS} = \left[(7)(26)(150) + \left(\frac{(490)(24.7)(7)}{12}\right) + \left(\frac{(490)(88.3)(30)}{(12)(33.3)}\right)\right] \times \frac{(33.3)(4-1)}{(12{,}000)(2)(100)} = 1.56 \text{ kpf}$ $w_g = \frac{(490)(189.76)}{144{,}000} = 0.646 \text{ kpf}$ $w_b = \frac{(490)(6.09)(3.96)(72)}{(2)(100)(144{,}000)} = 0.0295 \text{ kpf}$ $w_{DL} = 1.565 + 0.646 + 0.0295 = 2.241 \text{ kpf}$
7	$m_{DL} = \frac{w_{DL}L^2}{8}$	para 3-88 (eq 3-23)	$m_{DL} = \frac{(2.241)(100^2)}{8} = 2{,}801.25 \text{ kip-feet}$
8	$m_{LL} = \frac{m - m_{DL}}{1 + x}$	para 3-89 (eq 3-24)	$m_{LL} = \frac{6{,}767.64 - 2{,}801.25}{1 + 0.15} = 3{,}449.03 \text{ kip-feet}$
9	$M_{LL} = N_{1,2}m_{LL}$	para 3-90 (eq 3-25)	One lane: $M_{LL} = (1.36)(3{,}449.03) = 4{,}690.68 \text{ kip-feet}$ Two lanes: $M_{LL} = (1.0)(3{,}449.03) = 3{,}449.03 \text{ kip-feet}$
10	Girder moment classification	*Appendix C* para 3-91 *Table B-2* or *Figures B-1, B-2* $L = 100$ ft	One lane: W100, T100 Two lanes: W75, T75
11	Dead load per stringer	para 3-29, 3-35	$w_{DL} = \left[(7)(4)(150) + \frac{(490)(24.7)}{12}\right] \times \frac{1}{12{,}000} = 0.434 \text{ kpf}$
12	Effective number of stringers	para 3-32, 3-92 *Table 3-3*	$S_s = 4$ ft: One lane: $N_1 = \frac{14}{S_s} = \frac{14}{4} = 3.5$ Two lanes: $N_2 = \frac{11}{S_s} = \frac{11}{4} = 2.75$
13	$m = \frac{F_b S}{12}$	para 3-64 (eq 3-2) Use *Table D-2* to find S.	$m = \frac{(22.5)(196)}{12} = 367.5 \text{ kip-feet}$
14	$m_{DL} = \frac{w_{DL}L^2}{8}$	para 3-29, 3-35 (eq 3-3, 3-26) $L = S_f = 33.3$ ft	$m_{DL} = \frac{(0.434 \text{ kpf})(33.3 \text{ ft}^2)}{8} = 60.16 \text{ kip-feet}$

Table F-7. Classification Procedure for a Steel-Girder Bridge (continued)

Step	Equation/Procedure	Consideration	Computation
15	$m_{LL} = \frac{m - m_{DL}}{1 + x}$	para 3-36 (eq 3-4) *x = 0.15 (steel)*	$m_{LL} = \frac{367.5 - 60.16}{1 + 0.15} = 267.25$ *kip-feet*
16	$M_{LL} = N_{1,2} m_{LL}$	para 3-38 (eq 3-5)	One lane: $M_{LL} = (3.5)(267.25) = 935.38$ *kip-feet* Two lanes: $M_{LL} = (2.75)(267.25) = 734.94$ *kip-feet*
17	Stringer moment classification	*Appendix B* *Table B-2* or *Figures B-1, B-2* *L = 33.3 ft*	One lane: W100, T75 Two lanes: W80, T55
18	Allowable shear stress	para 3-63, 3-93 *Table 3-6*	$F_v = 0.45F_y = (0.45)(30) = 13.5$ *ksi*
19	$v = A_v F_v$	para 3-93 (eq 3-27) Obtain A_v from *Table D-2*.	$v = (10.60\ in^2)(13.5\ ksi) = 143.1$ *kips*
20	$v_{DL} = \frac{w_{DL} S_f}{2}$	para 3-93 (eq 3-28)	$v_{DL} = \frac{(0.434)(33.3)}{2} = 7.23$ *kips*
21	$v_{LL} = v - v_{DL}$	para 3-93 (eq 3-29)	$v_{LL} = 143.1 - 7.23 = 135.87$ *kips*
22	$V_{LL} = \frac{2v_{LL}}{1.15}$	para 3-93 (eq 3-30)	$V_{LL} = \frac{(2)(135.85)}{1.15} = 236.26$ *kips*
23	Stringer shear classification	*Appendix B* *Table B-3 or* *Figures B-3, B-4* *L = 33.3 ft*	One lane: W150, T150 Two lanes: W150, T150
24	$m = \frac{F_b S}{12}$ for floor beams	para 3-95 (eq 3-31) Use *Table D-2* to find S.	$m = \frac{(22.5)(1{,}110)}{12} = 2{,}081.25$ *kip-feet*
25	Dead load per floor beam	para 3-96 (eq 3-32)	$w_{DL} = \left[(7)(26)(150) + \left(\frac{(490)(24.7)(7)}{12}\right) + \left(\frac{(490)(88.3)(30)}{(12)(33.3)}\right)\right] \times \frac{33.3}{(12{,}000)(100)} = 1.04$ *kpf*
26	$m_{DL} = \frac{w_{DL} S_g^{\ 2}}{8}$	para 3-96 (eq 3-33)	$m_{DL} = \frac{(1.04)(30^2)}{8} = 117.0$ *kip-feet*
27	$m_{LL} = \frac{m - m_{DL}}{1 + x}$	para 3-97 (eq 3-34) *x = 0.15 (steel)*	$m_{LL} = \frac{2{,}081.25 - 117.0}{1 + 0.15} = 1{,}708.04$ *kip-feet*
28	One-way traffic: $P_e = 2m_{LL}\left(\frac{1}{S_g - S_e}\right)$	para 3-98 (eq 3-35) $S_e = 7$ *ft*	$P_e = (2)(1{,}708.04)\left(\frac{1}{30 - 7}\right) = 148.53$ *kips*

Table F-7. Classification Procedure for a Steel-Girder Bridge (continued)

Step	Equation/Procedure	Consideration	Computation
29	Two-way traffic: $P_e = m_{LL}\left(\frac{1}{S_g - S_e - C_v}\right)$	para 3-98 (eq 3-36) Use C_v as computed in step 2.	$P_e = (1{,}708.04)\left(\frac{1}{30 - 7 - 7}\right) = 106.75 \text{ kips}$
30	Floor-beam moment classification	para 3-99 *Figures 3-21* through *3-24* $L = 33.3$ ft	One lane: W150, T150 Two lanes: W150, T150
31	$v = A_v F_v$	para 3-101 (eq 3-37) Obtain A_v from *Table D-2.*	$v = (31.5)(13.5) = 425.25 \text{ kips}$
32	$v_{DL} = \frac{w_{DL} S_g}{2}$	para 3-102 (eq 3-38)	$v_{DL} = \frac{(1.04)(30)}{2} = 15.6 \text{ kips}$
33	$v_{LL} = \frac{v - v_{DL}}{1 + x}$	para 3-103 (eq 3-39) $x = 0.15$ (steel)	$v_{LL} = \frac{(425.25 - 15.6)}{1 + 0.15} = 356.22 \text{ kips}$
34	One-way traffic: $P_e = v_{LL} S_g \left(\frac{1}{S_g + b_r - 3.0 - S_e}\right) \geq v_{LL}$	para 3-104 (eq 3-40)	$P_e = (356.22)(30)\left(\frac{1}{30 + 24 - 3 - 7}\right)$ $= 242.88 \text{ kips} < 425.25 \text{ kips}$ $\therefore P_e = 425.25 \text{ kips}$
35	Two-way traffic: $P_e = \frac{v_{LL} S_g}{2}$ $\left(\frac{1}{S_g + b_r - 3.0 - 2S_e - C_v}\right) \geq 2v_{LL}$	para 3-104 (eq 3-41)	$P_e = \frac{(356.22)(30)}{2}\left(\frac{1}{30 + 24 - 3 - 27 - 7}\right)$ $= 314.31 \text{ kips} < 850.5 \text{ kips}$ $\therefore P_e = 850.5 \text{ kips}$
36	Floor-beam shear classification	para 3-106 *Figures 3-21* through *3-24*	One lane: W150, T150 Two lanes: W150, T150
37	Deck classification	para 3-107 Not critical here.	N/A
38	Width classification	*Table 3-4*	One lane: W150, T150 Two lanes: W60, T60
39	Final classification	N/A	One lane: W100, T75 Two lanes: W60, T55

Table F-8. Classification Summary for a Steel-Girder Bridge

Classification	W_1	W_2	T_1	T_2
Girder (step 10)	100	75	100	75
Moment (stringer) (step 17)	100	80	75	55
Shear (stringer) (step 23)	150	150	150	150
Floor beam (moment) (step 30)	150	150	150	150
Floor beam (shear) (step 36)	150	150	150	150
Deck (step 37)	N/A	N/A	N/A	N/A
Width (step 38)	150	60	150	60
Final	100	60	75	55

NOTE: For one-lane bridges, the final classification is the smallest value of the moment, shear, and deck classifications. Post a width-restriction sign if the width classification is smaller than the final classification. For two-lane bridges, the final classification is the smallest value of the moment, shear, width, and deck classifications.

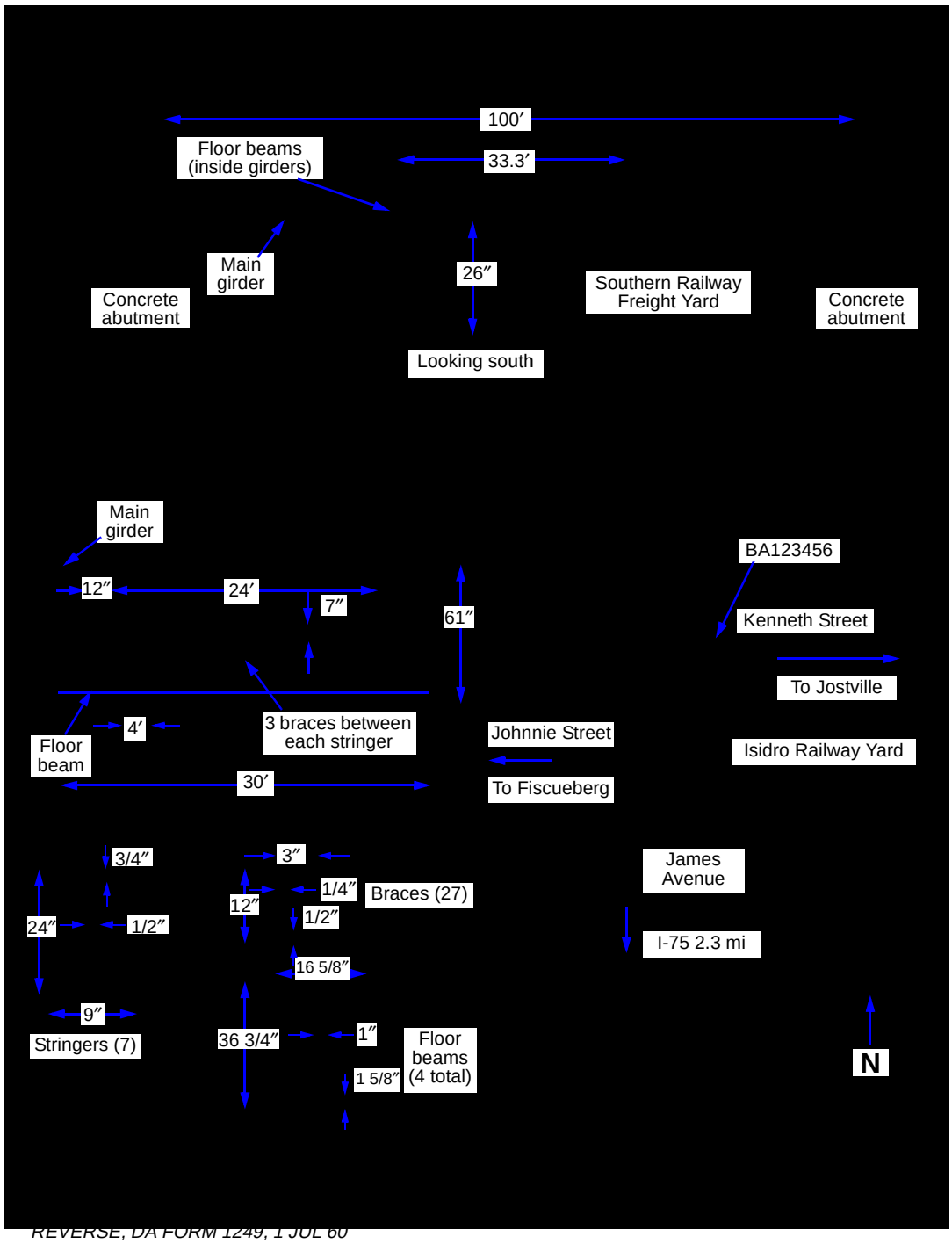

Figure F-5. Sample Bridge-Reconnaissance Report for a Steel-Girder Bridge

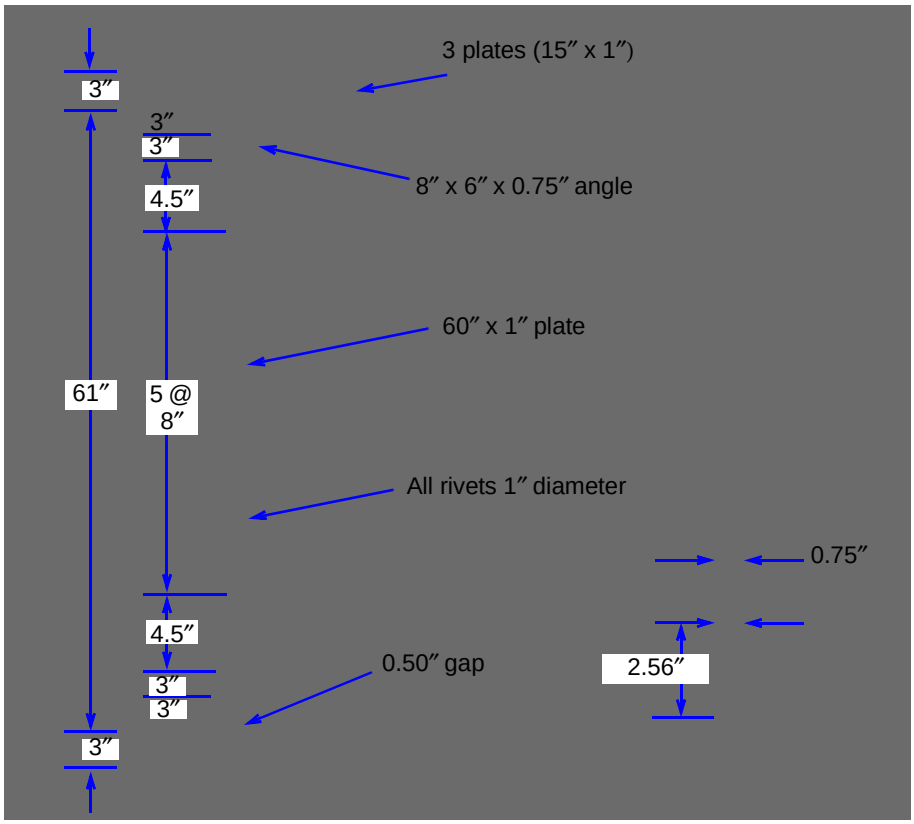

Figure F-6. Detail of the Main Girder

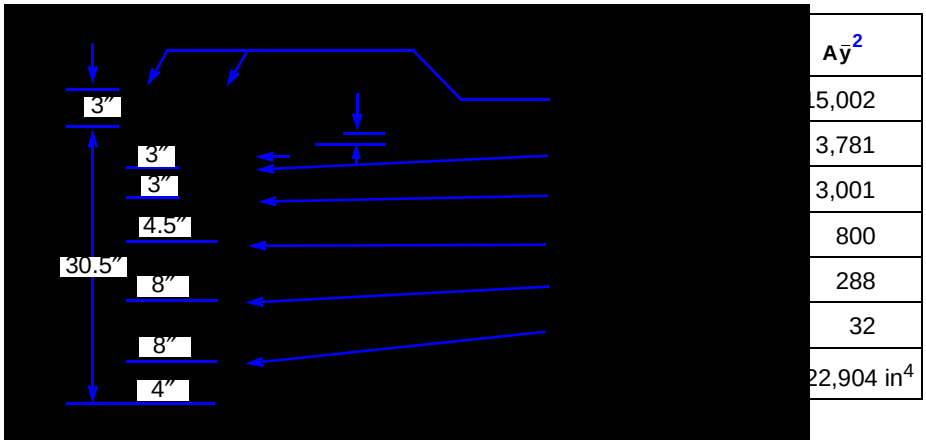

Figure F-7. Moment of Inertia of the Rivet Holes

TRUSS BRIDGE

F-6. In this example, *Table F-9, pages F-24* through *F-28*, shows the procedure for classifying a truss bridge. *Table F-10, page F-28*, contains a classification summary. *Figure F-8, page F-29*, shows a sample bridge-reconnaissance report for a truss bridge. *Figures F-9* and *F-10, page F-30*, show details of the bridge.

Table F-9. Classification Procedure for a Truss Bridge

Step	Equation/Procedure	Consideration	Computation
1	Area tension cord: $A_{angles} = 4(2.11) = 8.44\ in^2$ $A_{plates} = 2(18)(1) = 36\ in^2$ $A_{rivets} = \frac{\pi(0.75)^2}{4} \times 4 = 1.77\ in^2$	N/A	$A_t = A_{angles} + A_{plates} + A_{rivets}$ $= 8.44 + 36 + 1.77 = 46.21\ in^2$
2	Through-deck truss	para 3-116 (eq 3-45)	$W_{DL} = \frac{[190(38) + 25(46.21) + 260(6) + 120(7) - 2{,}400]}{1{,}000}$ $= 8.375\ kpf$
3	$w_{DL} = \frac{W_{DL}}{N_t}$	para 3-117 (eq 3-46)	$w_{DL} = \frac{8.375}{2} = 4.19\ kpf$
4	$m_{DL} = \frac{w_{DL}L^2}{8}$	para 3-118 (eq 3-47)	$m_{DL} = \frac{(4.19)(160^2)}{8} = 13{,}408\ kip\text{-}feet$
5	Yield stress Allowable tensile stress	para 3-63 *Tables 3-5, 3-6*	$F_y = 30\ ksi$ *(unknown type and data)* $F_t = 0.75F_y = 0.75(30) = 22.5\ ksi$
6	Net-area tension chord	Deduct cross-sectional area of rivet holes.	$A_{angles_{net}} = 8.44 - (4)(0.375)(0.75) = 7.32\ in^2$ $A_{plates_{net}} = 36 - (4)(1)(0.75) = 33\ in^2$ $A_n = 7.32 + 33 = 40.32\ in^2$
7	$T = F_tA_n$	para 3-119 (eq 3-48)	$T = (22.5)(40.32) = 907.2\ kips$
8	$\frac{KL_x}{r_x}$ and— $\frac{KL_y}{r_y}$	para 3-120 (eq 3-49, 3-50) Use $K = 0.88$ (for unknown type). Determine r_x and r_y from para D-15 and eq D-8.	$L_x = L_y = 20\ ft$ $\frac{KL_x}{r_x} = \frac{(0.88)(20)(12)}{(0.39)(18)} = 30.09$ $\frac{KL_y}{r_y} = \frac{(0.88)(20)(12)}{(0.55)(12.5)} = 30.72$

Table F-9. Classification Procedure for a Truss Bridge (continued)

Step	Equation/Procedure	Consideration	Computation
9	Allowable compressive stress	para 3-121 *Table 3-9* $C_c = 138.1$ (for unknown type and date). Use $\frac{KL}{r} = \frac{KL_y}{r_y}$ $= 30.72$	$\frac{KL}{r} = 30.72 \le C_c$ $F_c = 17{,}650 - (0.46)(30.72^2) = 17{,}215.89\ psi$ $F_c = \frac{17{,}215.89}{1{,}000} = 17.22\ ksi$
10	Area compression cord: $A_{angles} = 2(2.48) + 2(4.0) = 12.96\ in^2$ $A_{plates} = 2(18)(0.75) + 1(21)(0.438)$ $= 36.2\ in^2$ $A_{rivets} = \frac{\pi(0.75)^2}{4} \times 4 = 2.65\ in^2$	N/A	$A_g = A_{angles} + A_{plates} + A_{rivets}$ $= 12.96 + 36.2 + 2.65 = 51.81\ in^2$
11	$C = F_c A_g$	para 3-121 (eq 3-51)	$C = (17.22)(51.81) = 892.17\ kips$
12	$m = F'd'$	para 3-122 (eq 3-52) $F' = C$ $= 892.17\ kips$	$m = (892.17)(24) = 21{,}412.08\ kip\text{-}feet$
13	$m_{LL} = \frac{m - m_{DL}}{1.15}$	para 3-123 (eq 3-53)	$m_{LL} = \frac{21{,}412.08 - 13{,}408}{1.15} = 6{,}960.07\ kip\text{-}feet$
14	Effective numbers of trusses: <u>One lane</u>: $N_1 = \frac{2S_t}{S_t + b_r - 10}$ <u>Two lanes</u>: $C_v = b_r - 2S_e - 3.0 \ge 2.0\ ft$ $N_2 = \frac{S_t}{S_t + b_r - 17 - C_v}$	para 3-124 (eq 3-54, 3-55, 3-56)	<u>One lane</u>: $N_1 = \frac{(2)(43)}{43 + 38 - 10} = 1.21$ <u>Two lanes</u>: $C_v = 38 - (2)(7) - 3 = 21$ $N_2 = \frac{43}{43 + 38 - 17 - 21} = 1.0$
15	$M_{LL} = N_{1,2} m_{LL}$	para 3-125 (eq 3-57)	<u>One lane</u>: $M_{LL} = (1.21)(6{,}960.07) = 8{,}421.68\ kip\text{-}feet$ <u>Two lanes</u>: $M_{LL} = (1.0)(6{,}960.07) = 6960.07\ kip\text{-}feet$
16	Truss moment classification	para 3-126 *Appendix B* *Table B-2* or *Figures B-1, B-2* $L = 160\ ft$	<u>One lane</u>: <u>Two lanes</u>: W100 W85 T110 T90
17	Stringer: Yield stress Allowable stress	para 3-63, 3-127 *Tables 3-5, 3-6*	$F_y = 30\ ksi$ (unknown type and date) $F_b = 0.75F_y = (0.75)(30) = 22.5\ ksi$

Table F-9. Classification Procedure for a Truss Bridge (continued)

Step	Equation/Procedure	Consideration	Computation
18	Dead load per stringer	para 3-29, 3-35 Interior stringers control.	$w_{DL} = \left[(6)(6.33)(150) + \frac{(490)(27.7)}{12}\right] \times \frac{1}{12{,}000}$ $= 0.569\ kpf$
19	Effective number of stringers	para 3-32, 3-92 *Table 3-3*	*S = 6.33 ft:* One lane: $N_1 = \frac{14}{S} = 2.21$ Two lanes: $N_2 = \frac{11}{S} = 1.74$
20	$m = \frac{F_b S}{12}$	para 3-64 (eq 3-2) Use *Table D-2* to find S (W24x94).	$m = \frac{(22.5)(222)}{12} = 416.25\ kip\text{-}feet$
21	$m_{DL} = \frac{w_{DL} L^2}{8}$	para 3-29, 3-35 (eq 3-3, 3-26) $L = S_f = 20\ ft$	$m_{DL} = \frac{(0.569)(20^2)}{8} = 28.45\ kip\text{-}feet$
22	$m_{LL} = \frac{m - m_{DL}}{1 + x}$	para 3-36 (eq 3-4) $x = 0.15$ *(steel)*	$m_{LL} = \frac{416.25 - 28.45}{1 + 0.15} = 337.25\ kip\text{-}feet$
23	$M_{LL} = N_{1,2}\, m_{LL}$	para 3-38 (eq 3-5)	One lane: $M_{LL} = (2.21)(337.22) = 745.25\ kip\text{-}feet$ Two lanes: $M_{LL} = (1.74)(337.22) = 586.76\ kip\text{-}feet$
24	Stringer moment classification	*Appendix B* *Table B-2 or Figures B-1, B-2* $L = 20\ ft$	One lane: W150, T150 Two lanes: W150, T110
25	Allowable shear stress	para 3-63, 3-93 *Table 3-6*	$F_v = 0.45F_y = (0.45)(30) = 13.5\ ksi$
26	$v = A_v F_v$	para 3-93 (eq 3-27) Obtain A_v from *Table D-2.*	$v = (11.64)(13.5) = 157.14\ kips$
27	$v_{DL} = \frac{w_{DL} S_f}{2}$	para 3-93 (eq 3-28)	$v_{DL} = \frac{(0.569)(20)}{2} = 5.69\ kips$
28	$v_{LL} = v - v_{DL}$	para 3-93 (eq 3-29)	$v_{LL} = 157.14 - 5.69 = 151.45\ kips$
29	$V_{LL} = \frac{2v_{LL}}{1.15}$	para 3-93 (eq 3-30)	$V_{LL} = \frac{(2)(151.45)}{1.15} = 263.39\ kips$
30	Stringer shear classification	*Appendix B* *Table B-3* or *Figures B-3, B-4* $L = 20\ ft$	One lane: W150, T150 Two lanes: W150, T150

Table F-9. Classification Procedure for a Truss Bridge (continued)

Step	Equation/Procedure	Consideration	Computation
31	For floor beams: $m = \frac{F_b S}{12}$	para 3-95 (eq 3-31) Use *Table D-2* to find S (W36x280).	$m = \frac{(22.5)(1{,}030)}{12} = 1{,}931.25$ *kip-feet*
32	Dead load per floor beam	para 3-96 (eq 3-32)	$w_{DL} = \left[(6)(40)(150) + \frac{(490)(27.7)(7)}{12} + \frac{(490)(82.4)(43)}{(12)(20)}\right] \times \frac{20}{(12{,}000)(160)} = 0.533$ *kpf*
33	$m_{DL} = \frac{w_{DL} S_f^2}{8}$	para 3-96 (eq 3-33)	$m_{DL} = \frac{(0.533)(30^2)}{8} = 59.96$ *kip-feet*
34	$m_{LL} = \frac{m - m_{DL}}{1 + x}$	para 3-97 (eq 3-34) *x = 0.15 (steel)*	$m_{LL} = \frac{(1{,}931.25 - 59.96)}{1 + 0.15} = 1{,}627.21$ *kip-feet*
35	One-way traffic: $P_e = 2m_{LL}\left(\frac{1}{S_g - S_e}\right)$	para 3-98 (eq 3-35)	$P_e = (2)(1{,}627.21)\left(\frac{1}{43 - 7}\right) = 90.40$ *kips*
36	Two-way traffic: $P_e = 2m_{LL}\left(\frac{1}{S_g - S_e - C_v}\right)$	para 3-98 (eq 3-36) Use C_v as computed in step 14.	$P_e = (2)(1{,}627.23)\left(\frac{1}{43 - 7 - 21}\right) = 216.96$ *kips*
37	Floor-beam moment classification	para 3-99 *Figures 3-21* through *3-24* *L = 20 ft*	One lane: W150 T150 Two lanes: W150 T150
38	$v = A_v F_v$	para 3-101 (eq 3-37) Obtain A_v from *Table D-2.*	$v = (29.6\ in^2)(13.5\ ksi) = 399.6$ *kips*
39	$v_{DL} = \frac{w_{DL} S_g}{2}$	para 3-102 (eq 3-38)	$v_{DL} = \frac{(0.533)(43)}{2} = 11.46$ *kips*
40	$v_{LL} = \frac{v - v_{DL}}{1 + x}$	para 3-103 (eq 3-39) *x = 0.15 (steel)*	$v_{LL} = \frac{399.6 - 11.46}{1 + 0.15} = 337.51$ *kips*
41	One-way traffic: $P_e = v_{LL} S_g \left(\frac{1}{S_g + b_r - 3.0 - S_e}\right) \geq v_{LL}$	para 3-104 (eq 3-40)	$P_e = (337.51)(43)\left(\frac{1}{43 + 38 - 3 - 7}\right)$ $= 204.41$ *kips* < 399.6 *kips* $\therefore P_e = 399.6$ *kips*
42	Two-way traffic: $P_e = \frac{v_{LL} S_g}{2}\left(\frac{1}{S_g + b_r - 3.0 - 2S_e - C_v}\right) \geq 2v_{LL}$	para 3-104 (eq 3-41)	$P_e = \frac{(337.51)(43)}{2}\left[\frac{1}{43 + 38 - 3 - 2(7) - 21}\right]$ $= 168.78$ *kips* < 799.2 *kips* $\therefore P_e = 799.2$ *kips*
43	Floor-beam shear classification	para 3-106 *Figures 3-21* through *3-24*	One lane: W150 T150 Two lanes: W150 T150

Table F-9. Classification Procedure for a Truss Bridge (continued)

Step	Equation/Procedure	Consideration	Computation	
44	Deck classification	para 3-107 Not critical here.	N/A	
45	Width classification	*Table 3-4*	<u>One lane</u>: W150 T150	<u>Two lanes</u>: W150 T150
46	Final classification	N/A	<u>One lane</u>: W100 T110	<u>Two lanes</u>: W85 T90

Table F-10. Classification Summary for a Truss Bridge

Classification	W_1	W_2	T_1	T_2
Moment (truss) (step 16)	100	85	110	90
Stringer moment (step 24)	150	150	150	110
Stringer shear (step 30)	150	150	150	150
Floor-beam moment (step 37)	150	150	150	150
Floor-beam shear (step 43)	150	150	150	150
Deck (step 44)	N/A	N/A	N/A	N/A
Width (step 45)	150	150	150	150
Final	100	85	110	90

NOTE: For one-lane bridges, the final classification is the smallest value of the moment, shear, and deck classifications. Post a width-restriction sign if the width classification is smaller than the final classification. For two-lane bridges, the final classification is the smallest value of the moment, shear, width, and deck classifications.

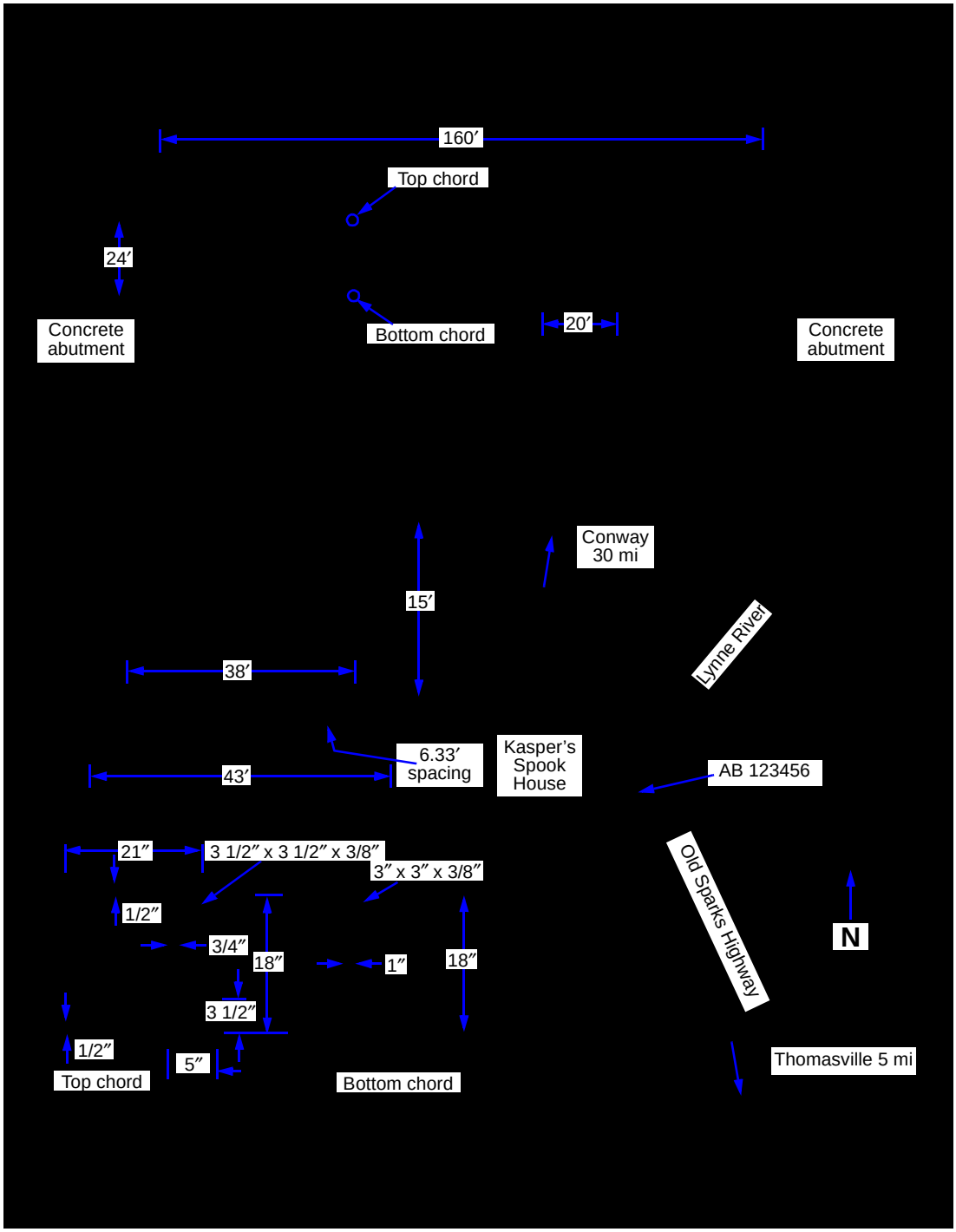

Figure F-8. Sample Bridge-Reconnaissance Report for a Truss Bridge

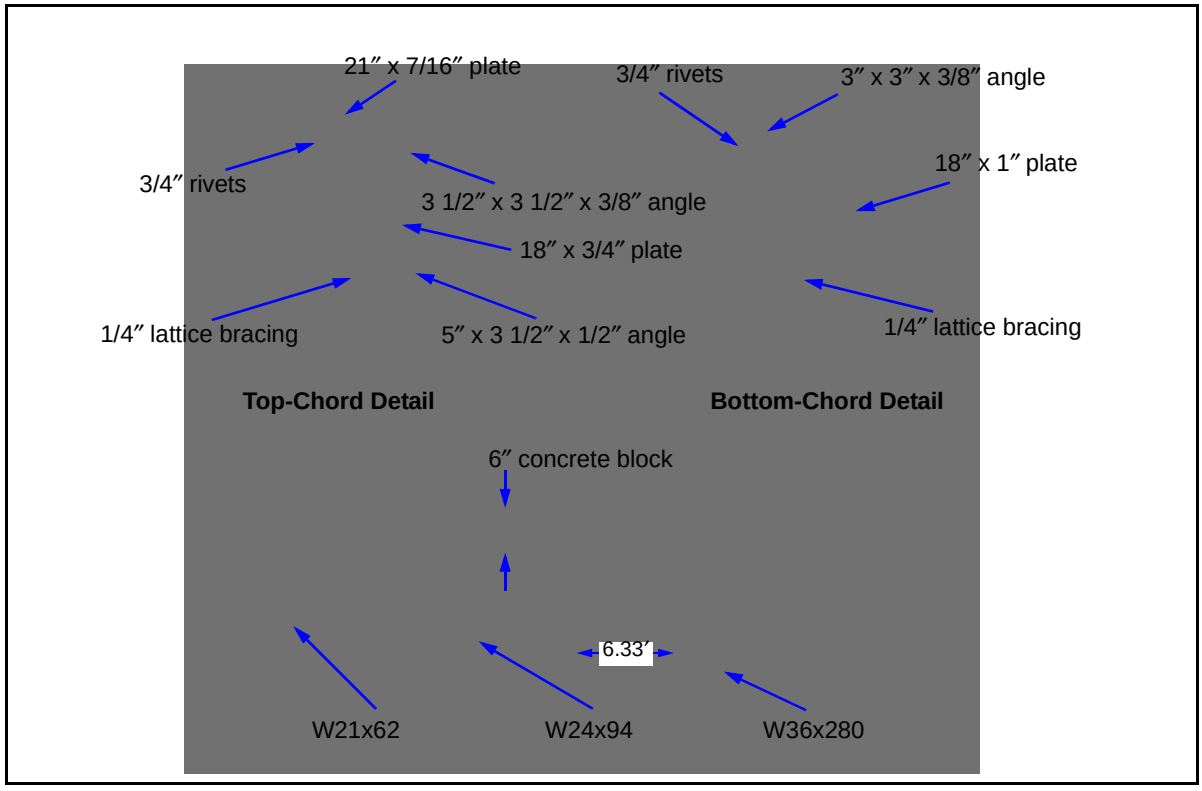

Figure F-9. Truss Details

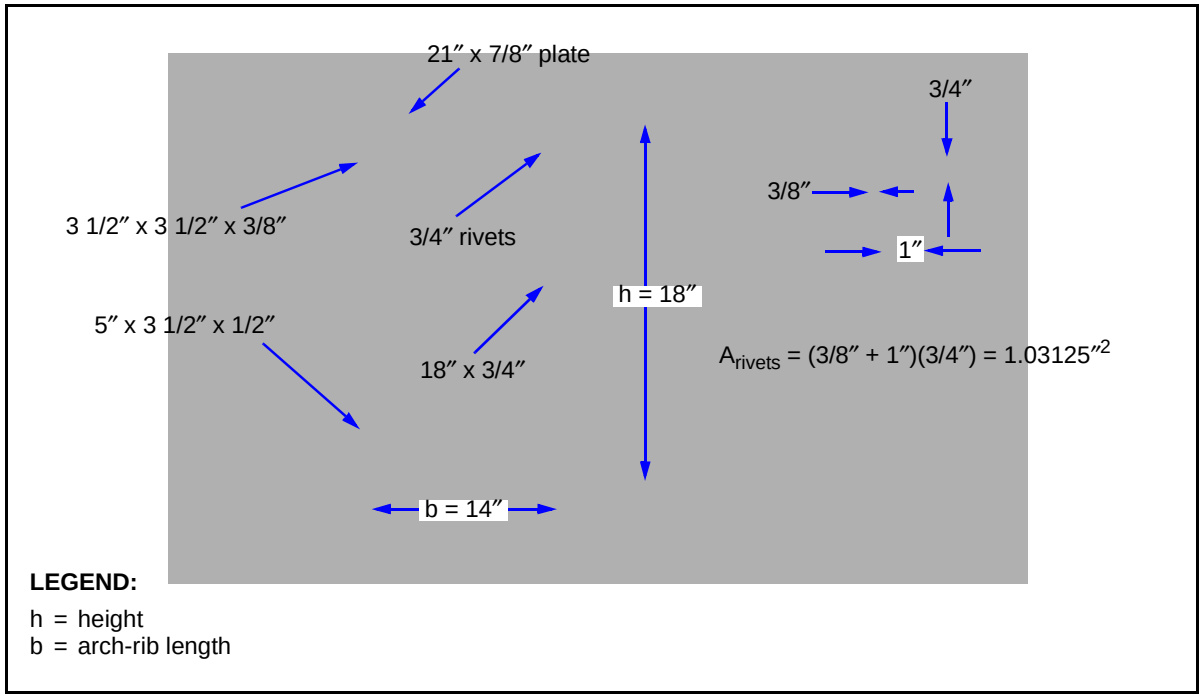

Figure F-10. Rivet Details

REINFORCED CONCRETE-SLAB BRIDGE

F-7. In this example, *Table F-11, pages F-31* and *F-32,* shows the procedure for classifying a reinforced concrete-slab bridge and *Table F-12, page F-32,* contains a classification summary. *Figure F-11, page F-33,* shows a sample bridge-reconnaissance report, and *Figure F-12, page F-34,* shows the steel-reinforcement details of this bridge. The local civilian bridge authorities provided the following stress values:

- $F_y = 50$ *ksi (grade-50 bars).*
- $f'c = 3$ *ksi.*

Table F-11. Classification Procedure for a Reinforced Concrete-Slab Bridge

Step	Equation/Procedure	Consideration	Computation
1	Concrete strength	para 3-132	$f'c = 3$ *ksi*
2	Steel yield strength	para 3-133	$F_y = 50$ *ksi*
3	$A_{st} = \frac{12A_b}{S_b}$ $R_s = \frac{A_{st}}{12d'}$	para 3-134 (eq 3-58, 3-59) $A_b = 1.00\ in^2$ *(for No. 9 bar)*	$A_{st} = \frac{(12)(1.00)}{7.5} = 1.6\ in^2$ $R_s = \frac{1.6}{(12)(12.25)} = 0.011$
4	$d_o = \frac{A_{st}F_y}{10.2f'c}$	para 3-135 (eq 3-60)	$d_o = \frac{(1.6)(50)}{(10.2)(3)} = 2.61$ *in*
5	$m = 0.075A_{st}F_y\left(d' - \frac{d_o}{2}\right)$	para 3-136 (eq 3-61)	$m = (0.075)(1.6)(50)\left(12.25 - \frac{2.61}{2}\right) = 65.67$ *kip-feet*
6	Total dead-load weight of the bridge components	para 3-137 Compute for an average 1-ft length of bridge span.	$W_{DL} = \left(\frac{14}{12}\right)(150)(31.125) + \left(\frac{2}{12}\right)(150)(28) + (2)\left(\frac{14 \times 18}{144}\right)(150) = 6{,}671.88$ *lb/ft* $W_{DL} = \frac{6{,}671.88}{1{,}000} = 6.67$ *kpf*
7	$m_{DL} = \frac{W_{DL}L^2}{8b_s}$	para 3-137 (eq 3-62)	$m_{DL} = \frac{(6.67)(20^2)}{(8)(31.125)} = 10.72$ *kip-feet*
8	$m_{LL} = \frac{m - 1.3m_{DL}}{1.5}$	para 3-138 (eq 3-63)	$m_{LL} = \frac{65.67 - (1.3)(10.72)}{1.5} = 34.49$ *kip-feet*
9	$b_e = 8 + 0.12L \le 14$ *ft*	para 3-139 (eq 3-65)	$b_e = 8 + (0.12)(20) = 10.4$ *ft*
10	$M_{LL} = b_e m_{LL}$	para 3-140 (eq 3-66)	$M_{LL} = (10.4)(34.49) = 358.69$ *kip-feet*
11	Moment classification	para 3-141 *Appendix B* *Table B-2 or Figures B-1, B-2* $L = 20$ *ft*	<u>One lane</u>: W75, T50 <u>Two lanes</u>: W75, T50

Table F-11. Classification Procedure for a Reinforced Concrete-Slab Bridge (continued)

Step	Equation/Procedure	Consideration	Computation	
12	Width classification	*Table 3-4*	One lane: W150 T150	Two lanes: W100 T100
13	Final classification	N/A	One lane: W75 T50	Two lanes: W75 T50

Table F-12. Classification Summary for a Reinforced Concrete-Slab Bridge

Classification	W_1	W_2	T_1	T_2
Moment (step 11)	75	75	50	50
Width (step 12)	150	100	150	100
Final	75	75	50	50
NOTE: For one-lane bridges, use the moment classification and post a width restriction sign if required. For two-lane bridges, the final classification is the smallest value of the moment and width restrictions.				

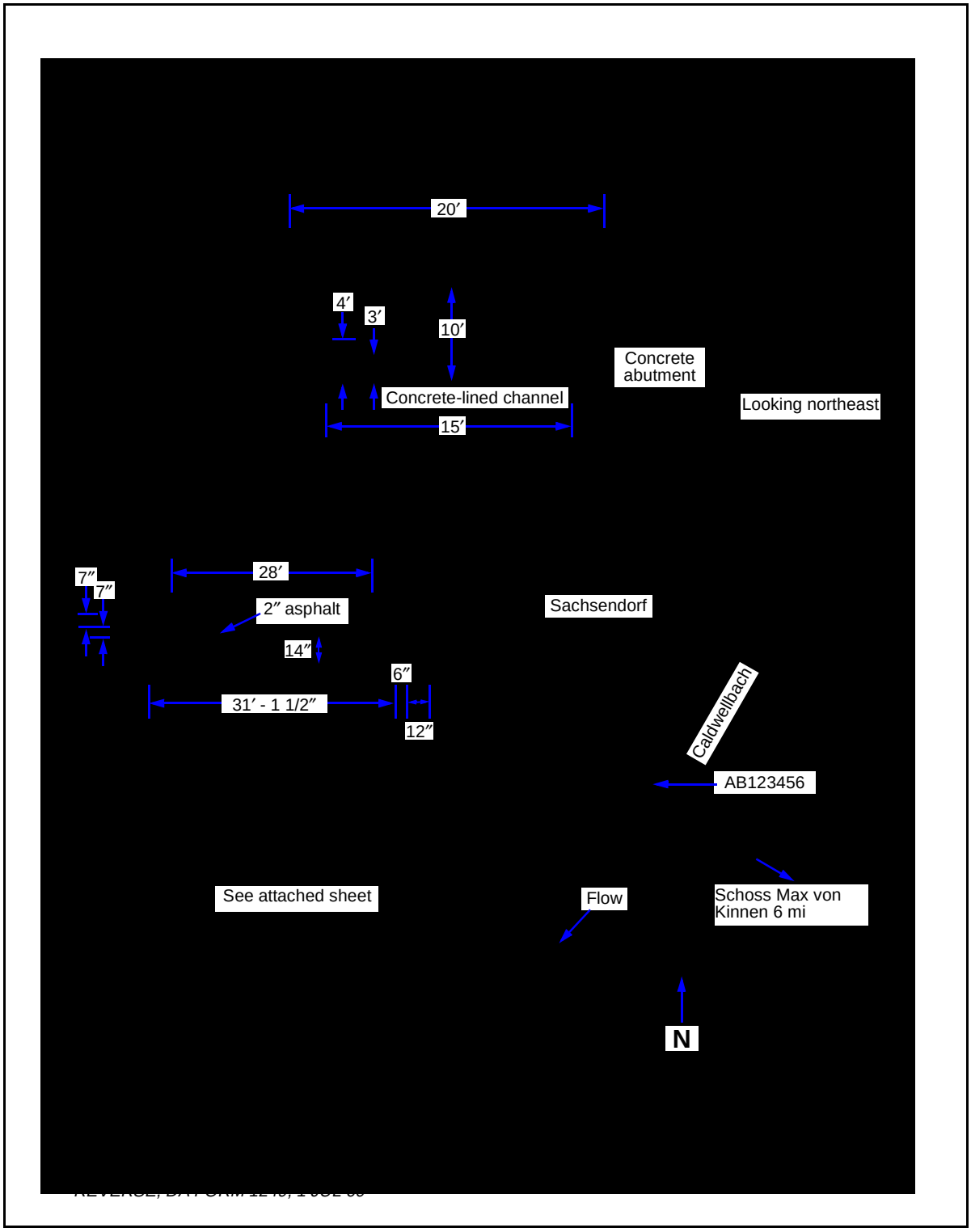

Figure F-11. Sample Bridge-Reconnaissance Report for a Reinforced Concrete-Slab Bridge

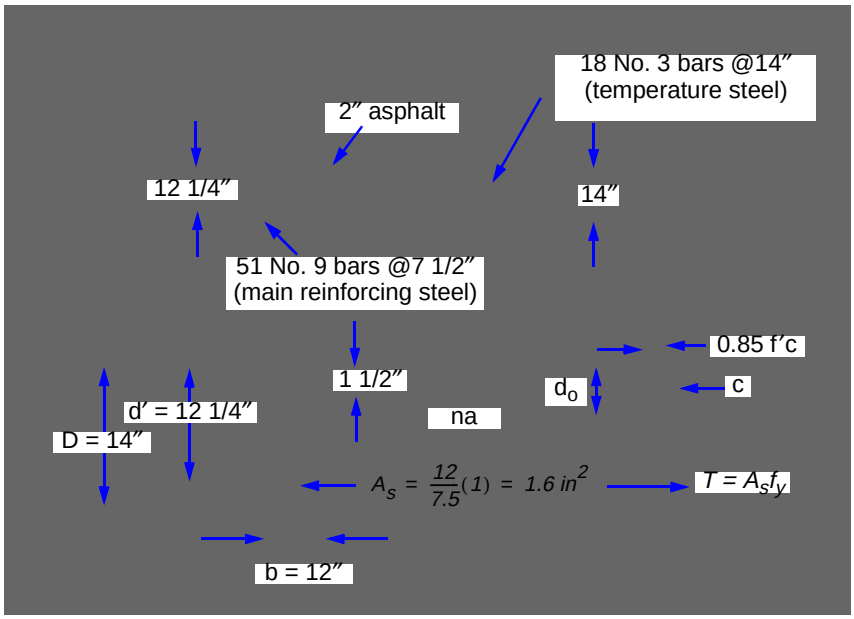

LEGEND:

A_s = total area of the reinforcing steel
b = width
c = compression
d′ = distance from the top of the beam to the center of the tension steel
D = depth
d_o = depth of concrete compression zone
f′c = concrete compressive strength
f_y = yield strength for reinforcing steel
T = tension

Figure F-12. Steel-Reinforcement Details for a Concrete-Slab Bridge

REINFORCED CONCRETE T-BEAM BRIDGE

F-8. In this example, *Table F-13, pages F-35* and *F-36*, shows the procedure for classifying a reinforced concrete T-beam bridge and *Table F-14, page F-36*, contains a classification summary. *Figure F-13, page F-37*, shows a sample bridge-reconnaissance report, and *Figure F-14, page F-38*, shows details of this bridge. The local civilian bridge authorities provided the following stress values:

- F_y = *40 ksi (grade-40 bars).*
- $f'c$ = *3 ksi.*

Table F-13. Classification Procedure for a Reinforced Concrete T-Beam Bridge

Step	Equation/Procedure	Consideration	Computation
1	Concrete strength	para 3-132	$f'c = 3\ ksi$
2	Steel yield strength	para 3-133	$F_y = 40\ ksi$
3	Effective flange width. Lesser value of: $b'' = \frac{1}{4}L$ $b'' = 12t_d + b$ $b'' = S_{T-B}$	para 3-145	$b'' = \frac{1}{4}(50)(12) = 150\ in$ $b'' = (12)(6) + 16 = 88\ in$ $b'' = 88\ in$ $\therefore b'' = 88\ in$
4	$A_{st} = A_b \times$ *total number of bars in bottom of T-beam* $T = A_{st}F_y$	para 3-146 (eq 3-67, 3-68)	$A_{st} = (1.56)(10) = 15.6\ in^2$ $T = (15.6)(40) = 624\ kips$
5	$d_o = \frac{A_{st}F_y}{0.85f'cb''}$	para 3-147 (eq 3-69)	$d_o = \frac{(15.6)(40)}{(0.85)(3)(88)} = 2.78\ in < td = 6\ in$
6	$m = 0.075A_{st}F_y\left(d' - \frac{d_o}{2}\right)$	para 3-148 (eq 3-70)	$m = (0.075)(15.6)(40)\left(41 - \frac{2.78}{2}\right) = 1{,}853.73\ kip\text{-}feet$
7	Total dead-load weight of the bridge components	N/A	$W'_{DL} = \left[\frac{1}{2}(5)(5) \times 2 + (16)(37.5)\right]\left(\frac{1}{144}\right)$ $(150)(4) + \left(6 \times \frac{1}{12}\right)(150)(28) +$ $\left(2 \times \frac{1}{12}\right)(150)(24) = 5{,}304.38\ lb/ft$ $W'_{DL} = \frac{5{,}304.38\ lb/ft}{1{,}000} = 5.30\ kpf$
8	$w_{DL} = \frac{W'_{DL}}{N_s}$	para 3-29 (eq 3-1)	$w_{DL} = \frac{5.30}{4} = 1.32\ kpf$
9	$m_{DL} = \frac{w_{DL}L^2}{8}$	para 3-150 (eq 3-75)	$m_{DL} = \frac{(1.32)(50^2)}{8} = 412.5\ kip\text{-}feet$
10	$m_{LL} = \frac{m - 1.3m_{DL}}{1.5}$	para 3-151 (eq 3-76)	$m_{LL} = \frac{1{,}853.73 - (1.3)(412.50)}{1.5} = 878.32\ kip\text{-}feet$

Table F-13. Classification Procedure for a Reinforced Concrete T-Beam Bridge (continued)

Step	Equation/Procedure	Consideration	Computation
11	Number of effective members	para 3-32 *Table 3-3*	$S_s = 88\ in = 7.33\ ft$: One lane: $N_1 = 2.2$ Two lanes: $N_2 = \frac{12}{S_s} = \frac{12}{7.33} = 1.64$
12	$M_{LL} = N_{1,2} m_{LL}$	para 3-152 (eq 3-78)	One lane: $M_{LL} = (2.2)(878.32) = 1{,}932.30\ kip\text{-}feet$ Two lanes: $M_{LL} = (1.64)(878.32) = 1{,}440.44\ kip\text{-}feet$
13	Moment classification	para 3-153 *Appendix B* *Table B-2 or* *Figures B-1, B-2* $L = 50\ ft$	One lane: Two lanes: W120 W85 T90 T65
14	Width classification	para 3-154 *Table 3-4*	One lane: Two lanes: W150 W60 T150 T60

Table F-14. Classification Summary for a Reinforced Concrete T-Beam Bridge

Classification	W_1	W_2	T_1	T_2
Moment (step 13)	120	85	90	65
Width (step 14)	150	60	150	60
Final	120	60	90	60
NOTE: For one- and two-lane bridges, the final classification is the smallest value of the moment and width classifications.				

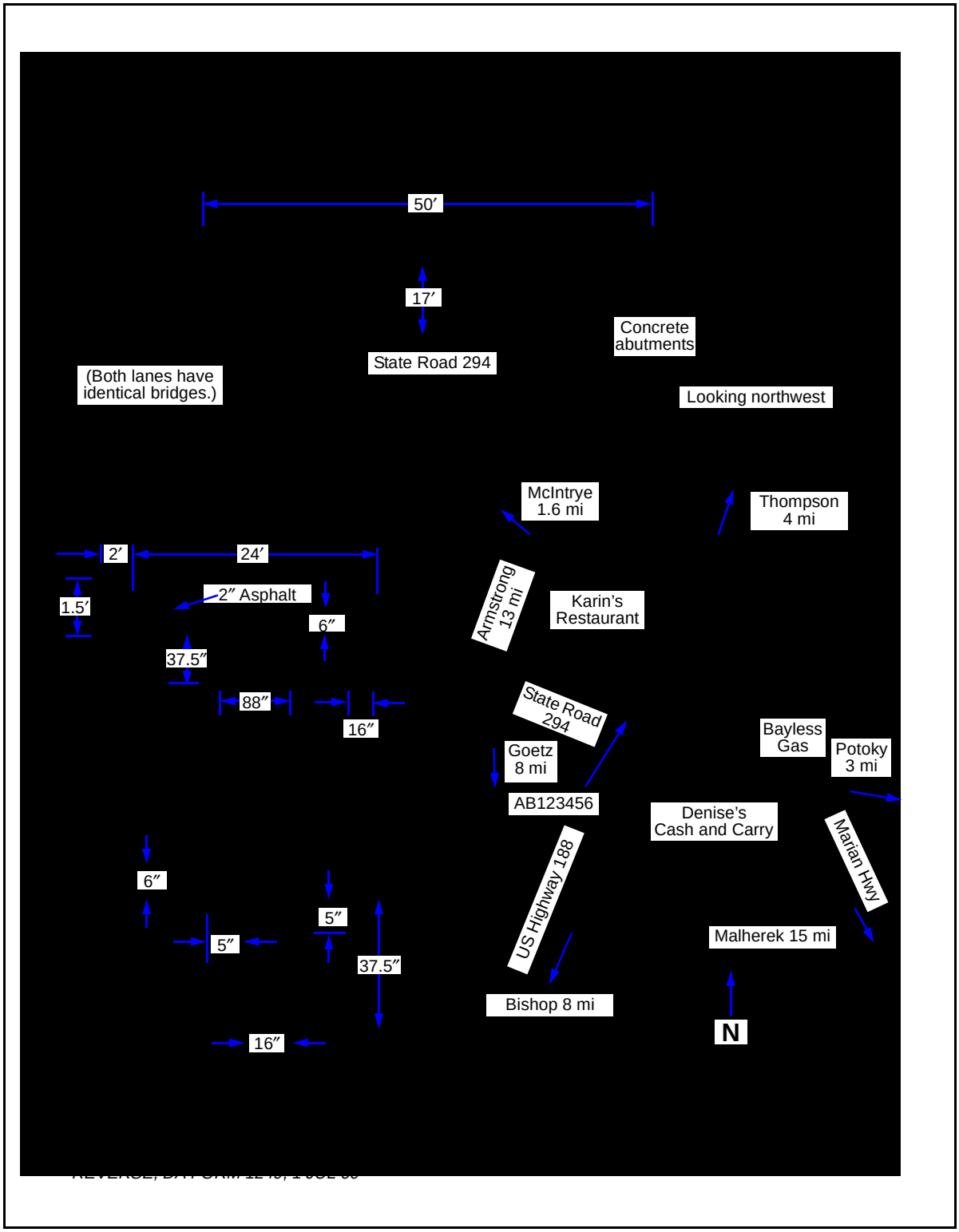

Figure F-13. Sample Bridge-Reconnaissance Report for a Reinforced Concrete T-Beam Bridge

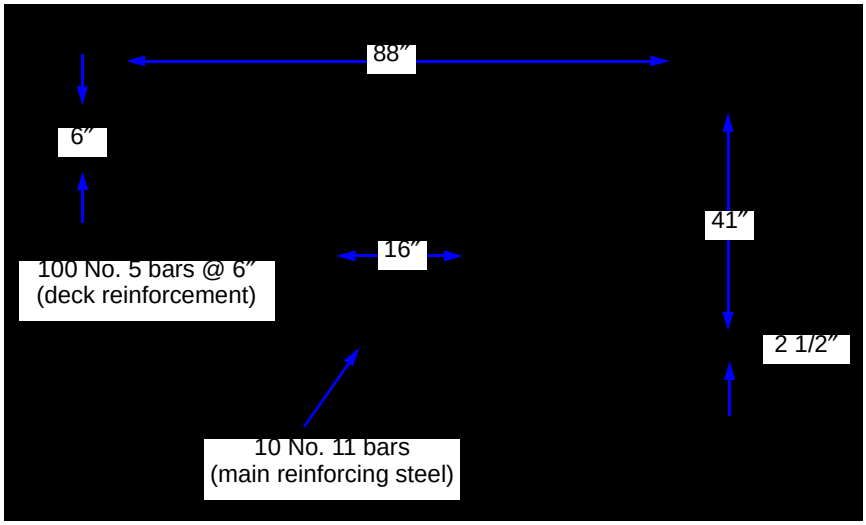

Figure F-14. Steel-Reinforcement Details

REINFORCED CONCRETE-BOX-GIRDER BRIDGE

F-9. In this example, *Table F-15, pages F-39* and *F-40*, shows the procedure for classifying a reinforced concrete-box-girder bridge and *Table F-16, page F-40*, contains a classification summary. *Figure F-15, page F-41*, shows a sample bridge-reconnaissance report, and *Figure F-16, page F-42*, shows details of this bridge from as-built civilian drawings. The local civilian bridge authorities provided the following stress values:

- $F_y = 50$ *ksi (grade-50 bars).*
- $f'c = 4$ *ksi.*

Table F-15. Classification Procedure for a Reinforced Concrete-Box-Girder Bridge

Step	Equation/Procedure	Considerations	Computation
1	Concrete strength	para 3-132	$f'c = 4$ *ksi*
2	Steel yield strength	para 3-133	$F_y = 50$ *ksi*
3	$b'' = \frac{b_f}{N_s}$	para 3-157 (eq 3-79)	$b'' = \frac{(21)(12)}{3} = 84$ *in*
4	$A_{st} = A_b \times$ *total number of bars in bottom of T-beam* $T = A_{st}F_y$	para 3-146 (eq 3-67, 3-68) Assume one-third of the bars act with the stem to resist tension.	Three stems, thus divide A_{st} by 3. $A_{st} = \frac{(1.56)(34)}{3} = 17.68\ in^2$ $T = (17.68)(50) = 884.0$ *kips*
5	$d_o = \frac{A_{st}F_y}{0.85f'cb''}$	para 3-147 (eq 3-69)	$d_o = \frac{(17.68)(50)}{(0.85)(4)(84)} = 3.09$ *in*
6	$m = 0.075A_{st}F_y\left(d' - \frac{d_o}{2}\right)$	para 3-148 (eq 3-70)	$m = (0.075)(17.68)(50)\left(85 - \frac{3.09}{2}\right) = 5{,}533.40$ *kip-feet*
7	Total dead-load weight of the bridge components	N/A	$W'_{DL} = (71 \times 8 \times 3)\left(\frac{1}{144}\right)(150) +$ $(21 \times 12 \times 7.5)\left(\frac{1}{144}\right)(150) +$ $(29 \times 12 \times 7.5)\left(\frac{1}{144}\right)(150) +$ $\left(1.5 \times \frac{1}{12}\right)(150)(24) = 6{,}912.5$ *lb/ft* $W'_{DL} = \frac{6{,}912.5\ lb/ft}{1{,}000} = 6.91$ *kpf*
8	$w_{DL} = \frac{W'_{DL}}{N_s}$	para 3-29 (eq 3-1)	$W'_{DL} = \frac{6.91}{3} = 2.30$ *kpf*
9	$m_{DL} = \frac{w_{DL}L^2}{8}$	para 3-150 (eq 3-75)	$m_{DL} = \frac{(2.30)(50^2)}{8} = 718.75$ *kip-feet*

Table F-15. Classification Procedure for a Reinforced Concrete-Box-Girder Bridge (continued)

Step	Equation/Procedure	Considerations	Computation
10	$m_{LL} = \frac{m - 1.3m_{DL}}{1.5}$	para 3-151 (eq 3-76)	$m_{LL} = \frac{5{,}533.40 - (1.3)(718.75)}{1.5} = 3{,}066.02\ kip\text{–}feet$
11	Number of effective stringers	para 3-32 *Table 3-3*	$S_s = 10.17\ ft$: One lane: $N_1 = \frac{16}{S_s} = \frac{16}{10.17} = 1.57$ Two lanes: $N_2 = \frac{14}{S_s} = \frac{14}{10.17} = 1.37$
12	$M_{LL} = N_{1,\,2} m_{LL}$	para 3-152 (eq 3-78)	One lane: $M_{LL} = (1.57)(3{,}066.02) = 4{,}813.65$ kip-feet Two lanes: $M_{LL} = (1.37)(3{,}066.02) = 4{,}200.45$ kip-feet
13	Moment classification	para 3-153 *Appendix B* *Table B-2 or* *Figures B-1, B-2* $L = 50\ ft$	One lane: W150 T150 Two lanes: W150 T150
14	Width classification	*Table 3-4*	One lane: W150 T150 Two lanes: W60 T60
15	Final classification	N/A	One lane: W150 T150 Two lanes: W60 T60

Table F-16. Classification Summary for a Reinforced Concrete-Box-Girder Bridge

Classification	W_1	W_2	T_1	T_2
Moment (step 13)	150	150	150	150
Width (step 14)	150	60	150	60
Final	150	60	150	60
NOTE: For one- and two-lane bridges, the final classification is the smallest value of the moment and width classifications.				

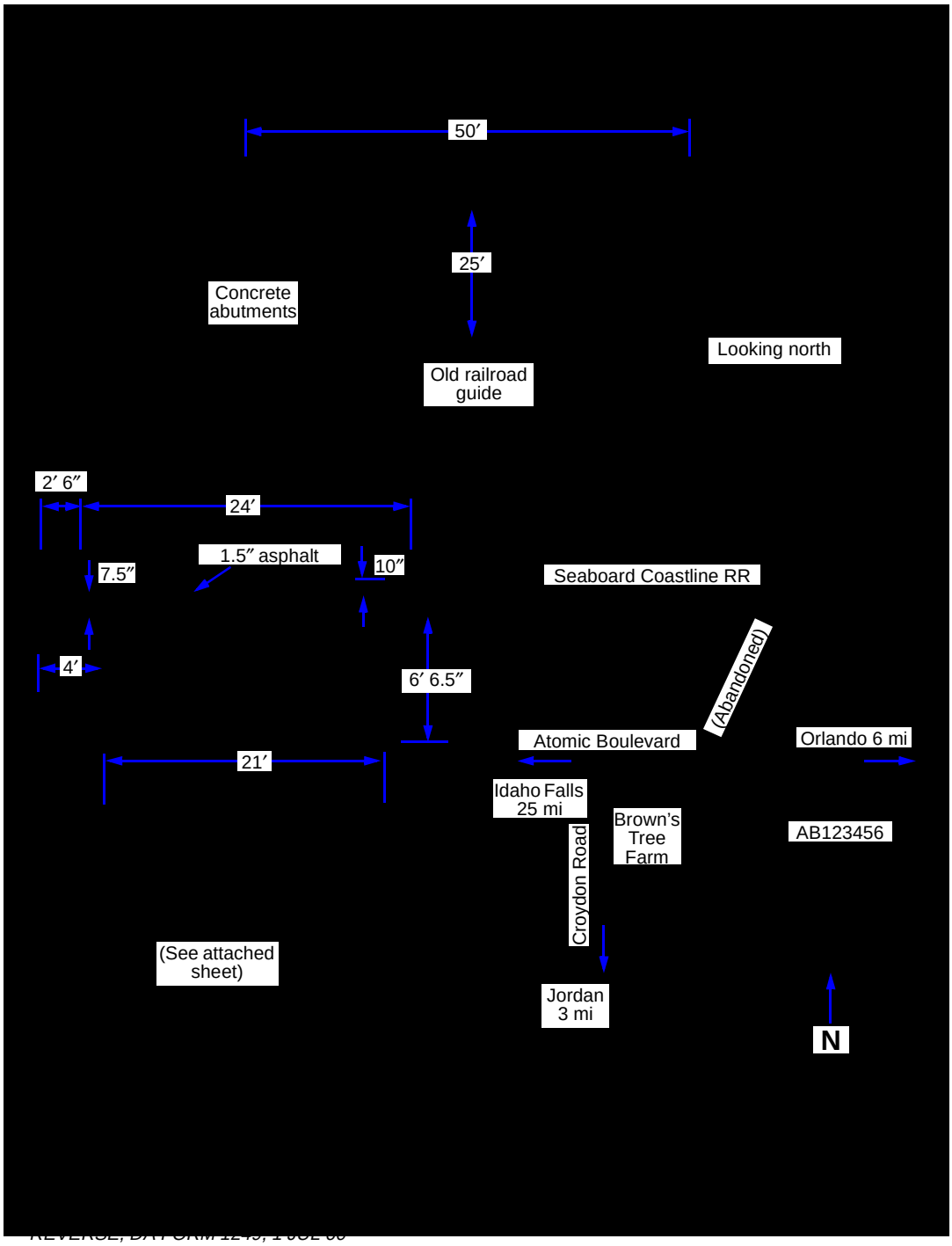

Figure F-15. Sample Bridge-Reconnaissance Report for a Reinforced Concrete-Box-Girder Bridge

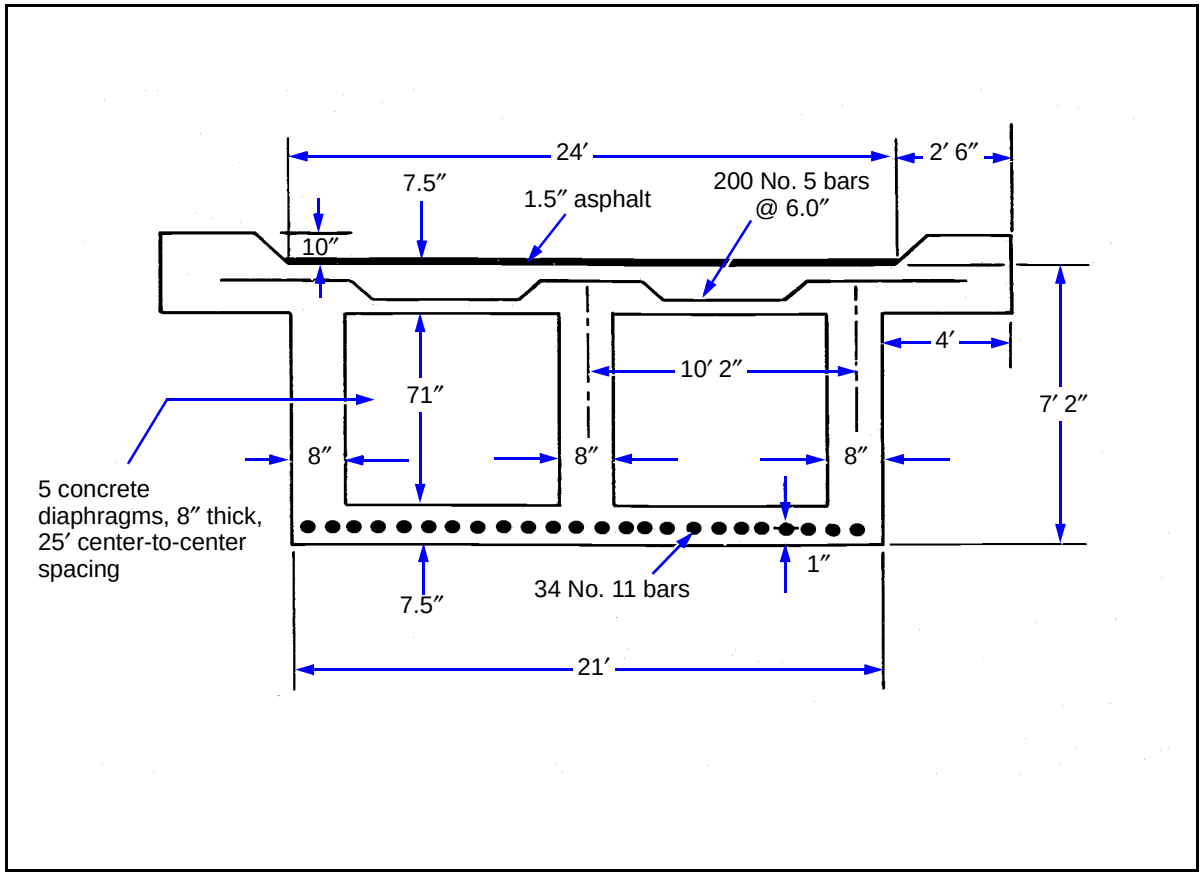

Figure F-16. Details From As-Built Civilian Drawings

PRESTRESSED CONCRETE BRIDGE

F-10. In this example, the bridge deck is of composite construction. Since the 28-day compressive strength of the deck and stringers is the same, no transformed moment of inertia calculations are required. If the deck were made of ordinary-grade concrete and the precast, prestressed beam made of high-strength concrete, the different moduli of elasticity would have to be considered. *Table F-17, pages F-43* through *F-45*, shows the procedure for classifying a prestressed concrete bridge, and *Table F-18, page F-45*, contains a classification summary. The detailed dimensions and information about the prestressed steel in *Figure F-17, page F-46*, were taken from as-built drawings. *Figure F-18, page F-47*, shows a sample bridge-reconnaissance report. The local civilian bridge authorities provided the following allowable stress values:

- $f_{pu} = 240$ *ksi.*
- $f'c = 5$ *ksi.*

Table F-17. Classification Procedure for a Prestressed Concrete Bridge

Step	Equation/Procedure	Consideration	Computation
1	Concrete strength	N/A	$f'c = 5$ *ksi*
2	Steel prestress strength	N/A	$f_{pu} = 240$ *ksi*
3	Effective flange width. Lesser value of: $b'' = \frac{1}{4}L$ $b'' = 12t_d + b$ $b'' = S$	para 3-165	$b'' = \frac{1}{4}(75)(12) = 225$ *in* $b'' = (12)(7) + 26 = 110$ *in* $b'' = 90$ *in* $\therefore b'' = 90$ *in*
4	A_{ps} = *A_p x total number of prestressed bars in bottom half of beam* $R_{ps} = \frac{A_{ps}}{b''d_{ps}}$	para 3-166 (eq 3-81)	$A_{ps} = (1.1)(6) = 6.6$ *in*^{2} $R_{ps} = \frac{6.6}{(90)(57)} = 0.0013$
5	A_s = *A_b x total number of prestressed bars in bottom half of beam* $R_s = \frac{A_s}{b''d_{ps}}$	para 3-166 (eq 3-82)	$A_s = 0$ $R_s = 0$
6	$R_r = \frac{R_{ps}f_{pu}}{f'c} + \frac{R_s d_s f_{sy}}{d_{ps}f'c}$	para 3-167 (eq 3-83)	$R_r = \frac{(0.0013)(240)}{5} + 0 = 0.0624$
7	$f_{ps} = f_{pu}(1 - 0.5R_r)$	para 3-168 (eq 3-84)	$f_{ps} = (240)[1 - 0.5(0.0624)] = 232.51$ *ksi*
8	$T = A_{ps}f_{ps} + A_s f_{sy}$	para 3-169 (eq 3-85)	$T = (6.6)(240) + 0 = 1{,}584$ *kips*

Table F-17. Classification Procedure for a Prestressed Concrete Bridge (continued)

Step	Equation/Procedure	Consideration	Computation
9	$A_c = \frac{T}{x_r f'_c}$ *where—* $x_r = [0.85 - 0.05(f'c - 4)] \geq 0.65$ for $f'c > 4.0$ *ksi*	para 3-170 (eq 3-86)	$A_c = \frac{1{,}584}{(0.8)(5)} = 396\ in^2$ $x_r = 0.85 - (0.05)(5 - 4) = 0.8$
10	$A_f = t_f b''$	para 3-171 (eq 3-87)	$A_f = (7)(90) = 630\ in^2$
11	For $R_r \leq 0.3$ and $A_f > Ac$: $d_o = \frac{R_r d_{ps}}{x_r}$ and— $m = 0.075T\left(d_{ps} - \frac{d_o}{2}\right)$	para 3-172 (eq 3-88, 3-89)	$d_o = \frac{(0.0624)(57)}{0.8} = 4.45\ in$ $m = (0.075)(1{,}584)\left(57 - \frac{4.45}{2}\right) = 6{,}507.51$ *kip-feet*
12	Total dead-load weight of the bridge components	N/A	$W_{DL} = \left(1{,}094 \times \frac{1}{144}\right)(150)(5) + \left(7 \times \frac{1}{12}\right)(150)(34) + \left(2 \times \frac{1}{12}\right)(150)(30)$ $= 9{,}422.92$ *lb/ft* $W_{DL} = \frac{9{,}422.92\ lb/ft}{1{,}000} = 9.42$ *kpf*
13	$w_{DL} = \frac{W_{DL}}{N_s}$	para 3-29 (eq 3-1)	$w_{DL} = \frac{9.42}{5} = 1.88$ *kpf*
14	$m_{DL} = \frac{w_{DL} L^2}{8}$	para 3-173 (eq 3-95)	$m_{DL} = \frac{(1.88)(75^2)}{8} = 1{,}321.88$ *kpf*
15	$m_{LL} = \frac{m - 1.3 m_{DL}}{1.5}$	para 3-174 (eq 3-96)	$m_{LL} = \frac{6{,}507.51 - (1.3)(1{,}321.88)}{1.5}$ $= 3{,}192.72$ *kip-feet*
16	Number of effective members	*Table 3-3*	$S_s = 7.5$ *ft:* One lane: $N_1 = \frac{14}{S_s} = \frac{14}{7.5} = 1.87$ Two lanes: $N_2 = \frac{11}{S_s} = \frac{11}{7.5} = 1.47$
17	$M_{LL} = N_{1,2} m_{LL}$	para 3-175 (eq 3-98)	One lane: $M_{LL} = (1.87)(3{,}192.72) = 5{,}970.38$ *kip-feet* Two lanes: $M_{LL} = (1.47)(3{,}192.72) = 4{,}693.29$ *kip-feet*

Table F-17. Classification Procedure for a Prestressed Concrete Bridge (continued)

Step	Equation/Procedure	Consideration	Computation	
18	Moment classification	para 3-176 *Appendix B* *Table B-2 or* *Figures B-1, B-2* *L = 75 ft*	<u>One lane</u>: W150 T150	<u>Two lanes</u>: W150 T135
19	Width classification	*Table 3-4*	<u>One lane</u>: W150 T150	<u>Two lanes</u>: W100 T100
20	Final classification	N/A	<u>One lane</u>: W150 T150	<u>Two lanes</u>: W100 T135

Table F-18. Classification Summary for a Prestressed Concrete Bridge

Classification	W_1	W_2	T_1	T_2
Moment (step 18)	150	150	150	135
Width (step 19)	150	100	150	100
Final	150	100	150	135
NOTE: For one- and two-lane bridges, the final classification is the smallest value of the moment and width classifications.				

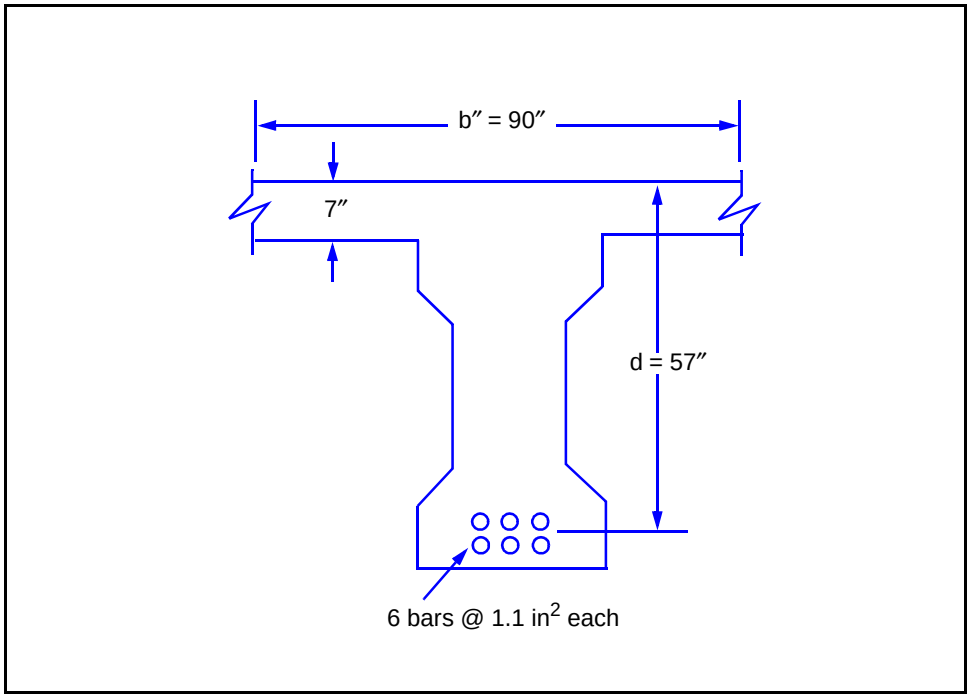

Figure F-17. Details of a Prestressed Beam

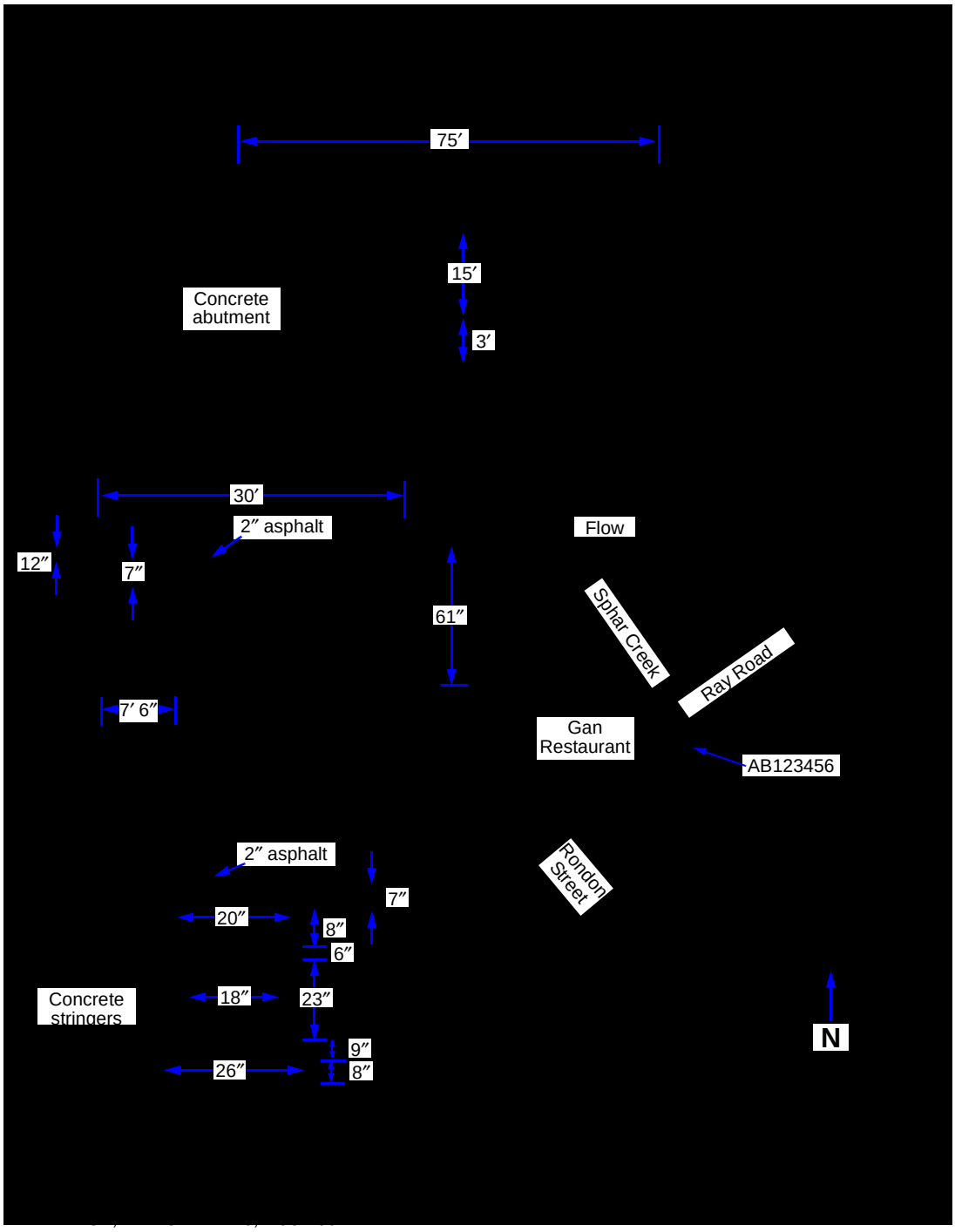

Figure F-18. Sample Bridge-Reconnaissance Report for a Prestressed Concrete Bridge

MASONRY-ARCH BRIDGE

F-11. In this example, *Table F-19* shows the measured bridge dimensions, *Table F-20* shows the classification procedures, and *Table F-21* shows a classification summary for a masonry-arch bridge. *Figure F-19, page F-50,* shows a sample bridge-reconnaissance report. Tests show that the arch is made of blue engineering brick. The ring is in good condition with well-mortared joints (about 3/8-inch wide). A small transverse crack was noted within 2 feet of the edge of the ring and there is a slight vertical settlement at one of the abutments.

Table F-19. Masonry-Arch Dimensions

Bridge Dimensions	
L (ft) (refer to the diagram at right)	40
b_r (ft)	18
b_d (ft)	20
R (ft) (refer to the diagram at right)	20
t_d (in) (do not include the wearing surface) $t_d = t + d_f$	30

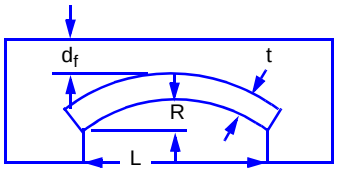

Table F-20. Classification Procedure for a Masonry-Arch Bridge

Step	Equation/Procedure	Consideration	Computation
1	PLC	*Figure 3-43*	*PLC = 34*
2	Length-to-rise ratio: $\frac{L}{R}$ Arch factors: A *(Table 3-13)* B *(Table 3-14)* C *(Table 3-15)* D *(Table 3-16)* E *(Table 3-19)* F *(Table 3-17)* G *(Table 3-18)*	Length-to-rise ratio: $\frac{L}{R}$ Arch factors: Profile Material Joint Abutment size Crack Deformation Abutment fault	$\frac{L}{R} = \frac{40}{20} = 2$ Arch factors: A = 1.0 B = Blue engineering brick = 1.2 C = Normal joints, pointed mortar = 1.0 D = Both satisfactory = 1.0 E = Small, transverse crack within 2 feet of the edge = 1.0 F = No significant deformation = 1.0 G = Slight vertical settlement of one abutment = 0.8
3	Strength classification: $T_1 = PLC$ *(arch factors)* $T_2 = 0.9\ T_1$ W_1 W_2	Obtain W_1 and W_2 from *Figure 3-45.*	$T_1 = (34)(1.0)(1.2)(1.0)(1.0)(1.0)(1.0)(0.8) = 32.64$ $T_2 = (0.9)(32.64) = 29.38$ $W_1 = 52$ $W_2 = 48$
4	Width classification	*Table 3-4*	One lane: W150, T150 Two lanes: W30, T30
5	Final classification	See summary in *Table F-21.*	N/A
6	Posting	Draw a bridge sign.	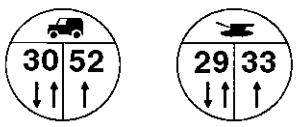

Table F-21. Classification Summary for a Masonry-Arch Bridge

Classification	W_1	W_2	T_1	T_2
Moment (step 3)	52	48	33	29
Width (step 4)	150	30	150	30
Final	52	30	33	29
NOTE: For one-lane bridges, the controlling classification is always the strength classification. Post a width-restriction sign if the width classification is smaller than the strength classification. For two-lane bridges, the controlling classification is the smaller value of the strength and width classifications.				

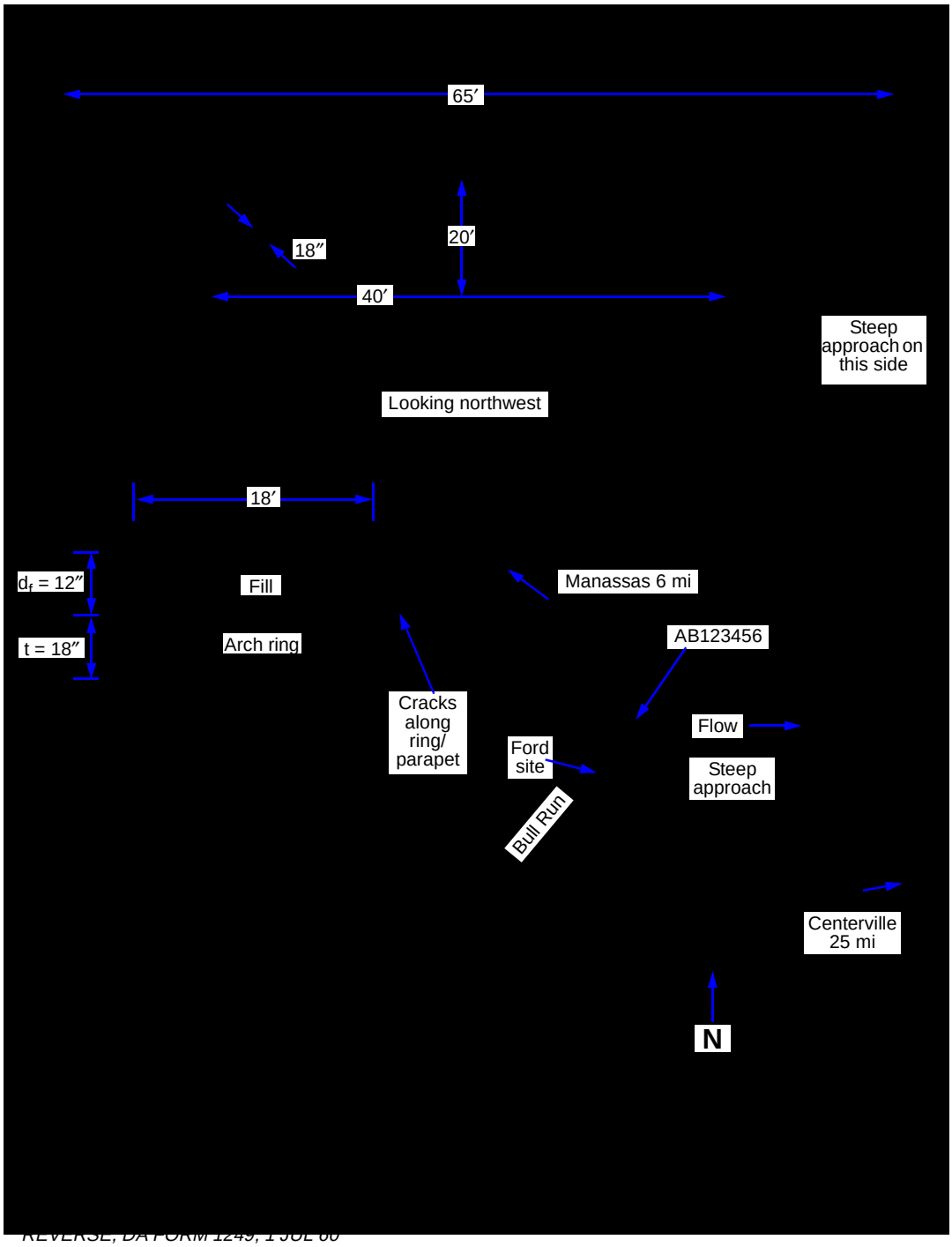

REVERSE, DA FORM 1249, 1 JUL 00

Figure F-19. Sample Bridge-Reconnaissance Report for a Masonry-Arch Bridge

Appendix G

Concrete Properties

Concrete is a mixture of aggregates (sand and gravel), entrained air, cement, and water. A chemical reaction between the cement and the water causes concrete to harden. This reaction is known as hydration. Concrete is, at first, a plastic mass that can be cast or molded into nearly any size or shape. When hydrated, concrete becomes stonelike in strength, durability, and hardness. The strength of concrete depends on the water-to-cement ratio used in the concrete mixture. Generally, the less water in the mix, the stronger, more durable, and watertight the concrete. Too much water dilutes the cement paste and results in weak concrete.

GENERAL PROPERTIES

G-1. A sack of cement requires about 2 1/2 gallons of water for hydration. However, more water will improve the workability of plastic concrete. Normally, concrete mixtures will use 4 to 7 gallons of water per sack of cement.

G-2. *Table G-1* shows the approximate compressive strengths of concrete for various water-to-cement ratios. To classify bridges with unknown concrete strength, assume a compressive strength of 3,000 psi.

Table G-1. Maximum Permissible Water-to-Cement Ratios for Concrete

Specified Compressive Strength (f'c) (psi)[1]	Maximum Absolute Permissible Water-to-Cement Ratio (by Weight)	
	Nonair-Entrained Concrete	Air-Entrained Concrete
2,500	0.67	0.54
3,000	0.58	0.46
3,500	0.51	0.40
4,000	0.44	0.35
4,500	0.38	See note 2
5,000	See note 2	See note 2

NOTES:

1. This value refers to the 28-day strength. With most materials, the water-to-cement ratios shown will provide average strengths greater than required.

2. For strengths above 4,500 psi (nonair-entrained concrete) and 4,000 psi (air-entrained concrete), proportions should be established using the trial-batch method.

1,000 psi ≃ 7 megapascal

G-3. Concrete is among the best and most important building materials. Concrete is fireproof, watertight, comparatively economical, and easy to prepare. It offers surface continuity and solidity and bonds with other materials. Concrete is used in bridging to make abutments, intermediate supports, columns, beams, slabs, decks, curbs, and handrails. Concrete offers good compressive strength and has a long service life. Certain limitations of concrete cause cracking and other structural weaknesses that detract from its appearance, serviceability, and useful life. Some limitations of concrete are discussed below.

LOW TENSILE STRENGTH

G-4. Concrete members subject to tensile stresses must be reinforced with steel bars or mesh. This will prevent cracking and failure.

THERMAL MOVEMENTS

G-5. During setting and hardening (curing), the heat of hydration raises the concrete temperature and then gradually cools. The temperature changes can cause severe thermal strain and early cracking. Also, hardened concrete expands and contracts with changes in temperature at roughly the same rate as steel. Therefore, provide expansion and contraction joints in concrete constructions.

DRYING, SHRINKAGE, AND MOISTURE MOVEMENT

G-6. Concrete shrinks as it dries out and, even when hardened, expands and contracts with wetting and drying. These movements require control joints to avoid unsightly cracks. To prevent drying shrinkage and cracks, keep the surface of newly placed concrete moist during the curing process.

CREEP

G-7. Concrete gradually deforms (creeps) under load. The concrete does not recover completely when the load is removed. Over time, creep may reduce the structural soundness of the bridge.

PERMEABILITY

G-8. Concrete is not entirely impervious to moisture. It contains soluble compounds that may be leached out by water.

HYDRATION

G-9. To hydrate concrete properly, keep the temperature of the concrete above 50°F during the early curing process of the concrete. Trying to maintain the minimum required temperature causes some additional problems when placing concrete in cold weather.

CEMENT TYPES

G-10. Different types of cement have been developed to offset some of the limitations of using concrete in structures. The ASTM specifications cover five types of portland cements.

TYPE I

G-11. Type I is a general-purpose cement for concrete work that does not require any of the special properties of the other types. In general, it is used when concrete structures are not subject to sulfate attack or when the heat of hydration will not cause too great a temperature rise. Type-I cement is used in pavement and sidewalk construction, reinforced concrete buildings and bridges, railways, culverts, and soil-cement mixtures. Do not use Type-I cement where it will come into contact with sea water. Type-I cement reaches its design strength in 28 days.

TYPE II

G-12. Modified to resist moderate sulfate attack, Type-II cement generally generates less heat of hydration and cures at a slower rate than Type-I cement. In general, it is used in drainage structures where the sulfate concentrations in either the soil or the groundwater are higher than normal, but not severe, and in large structures when the moderate heat of hydration produces only a slight temperature rise in the concrete. However, temperature rise can be a problem when Type-II cement is placed during warm weather. Type-II cement reaches its design strength in 45 days.

TYPE III

G-13. Type-III cement achieves a high design strength very quickly in the curing process (usually 7 days or less). It has a higher heat of hydration and is more finely ground than Type-I cement. Type-III cement permits fast form removal and, in cold weather construction, reduces the period of protection against low temperatures. Although richer mixtures of Type I can obtain high design strength at an early stage, Type-III cement produces this early strength more satisfactorily and economically. Use Type-III cement cautiously in concrete structures having a minimum spacing of 2 1/2 feet or more because the high heat of hydration can cause shrinkage cracking.

TYPE IV

G-14. Type-IV cement has a low heat of hydration and is intended for applications requiring a minimal rate and amount of heat of hydration. Its strength also develops at a slower rate than other types of cement. Use Type-IV cement primarily in very large concrete structures, such as gravity dams, where the temperature rise from the heat of hydration could damage the structure. Type-IV cement reaches its design strength in 90 days.

TYPE V

G-15. Type V is a sulfate-resistant cement and is used mainly for applications where the concrete is subject to severe sulfate action, such as when the soil or groundwater in contact with the concrete has high concentrations of sulfate. Type-V cement reaches its design strength in 60 days.

AIR-ENTRAINING CEMEMTS

G-16. Types IA, IIA, and IIIA correspond in composition to Types I, II, and III, respectively, with the addition of small quantities of air-entraining

materials ground into the clinker during manufacture. Air-entraining cements produce concrete having improved resistance to freeze-thaw action and to scaling caused by snow- and ice-removal chemicals. Such concrete contains extremely small, well-distributed (as many as 3 billion per cubic yard), and completely separate air bubbles.

MASONRY CEMENTS

G-17. Masonry cements (sometimes called *mortar cements*) are typically mixtures of portland cement, hydrated lime, and other materials. This mixture improves the workability, plasticity, and water retention of the cement.

MASS-CONCRETE STRUCTURES

G-18. Some structural members are made of solid concrete (little or no steel reinforcement). Generally, these concrete structures are in compression only and require massive weight to be effective. Examples of members that may be solid concrete are abutments, suspension-bridge cable anchors, masonry arches, and gravity dams. Concrete structures (even those in complete compression) will normally have some reinforcing steel to provide internal strength.

STEEL-REINFORCED CONCRETE

G-19. Steel-reinforced concrete is used in almost all concrete structures. Since concrete has poor tensile strength (it breaks easily when pulled apart), steel has to be added to structural members to accommodate the tensile forces. On the other hand, while steel is better at carrying tensile force, it has the tendency to buckle when compressed. Therefore, when the two materials are combined, one makes up for the deficiency of the other. When steel reinforcement in concrete helps carry loads, the combination is called reinforced concrete. A reinforced concrete structure takes many forms—beams, columns, girders, walls, footings, slabs, and so forth. See *FM 5-428* for more specific information on steel reinforcement.

BEAM REINFORCEMENT, SIMPLY SUPPORTED BEAMS

G-20. When a simply supported beam is loaded, the top of the beam receives compressive stresses and the bottom of the beam receives tensile stresses. This condition can easily be visualized by bending a pencil up and observing the shortening of the top fibers (compression) and the lengthening of the bottom fibers (tension). In the compression area of the beam (top), no steel reinforcement is necessary because concrete is strong under compression. However, in the tension area of the beam (bottom), steel reinforcement is necessary to carry the tensile forces.

BEAM REINFORCEMENT, CONTINUOUSLY SUPPORTED BEAMS

G-21. The tension areas in continuous beams (beams supported by three or more supports) are found on the top and the bottom of the beam, depending on the location along the beam being analyzed and the position of the load. At the

center of a continuous span, the top of the beam is in compression and the bottom is in tension (similar to a simply supported beam). The tension-reinforcing steel is located in the bottom portion of the beam. Over the intermediate support(s) of a continuous beam, the top of the beam receives tensile stresses, so the reinforcing steel is located in the top portion of the beam over the intermediate support(s).

BEAM REINFORCEMENT, BAR REPLACEMENT

G-22. *Figure G-1* shows common shapes of reinforcing steel for beams. The purpose of both straight and bent-up bars is to resist the bending tension in the bottom of a beam. A beam requires fewer bars near the ends of a span because the bending moment is smaller near the span ends than at the span center. However, the shear forces are larger at the span ends, and this condition causes diagonal tension in the beam. This area is where the inclined portion of the bent-up bar is placed to resist the diagonal tension due to shear. The bent-up portion of reinforcing bars for continuous beams continues across the intermediate supports to resist top tension in the support area. When the bent-up bars cannot resist all of the diagonal tension, U-shaped bars (called stirrups) are added. Because of the tensile stress on the stirrups, they pass under the bottom bar and are inclined or perpendicular to it to prevent slippage.

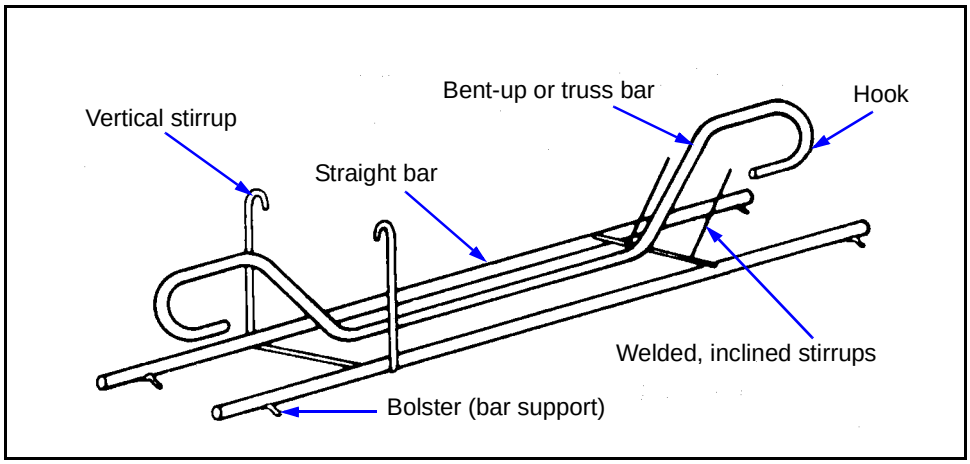

Figure G-1. Typical Shapes of Reinforcing Steel for Beams

SLAB-DECK REINFORCEMENT

G-23. Slab decks are usually continuous over each of the stringers on a bridge. Tension exists in the top and bottom portions of the slab as a load is applied. Steel reinforcement is necessary in the top and bottom portions of slab decks, perpendicular to the stringers *(Figure G-2, page G-6)*. Besides the main reinforcement of concrete slabs, reinforcement comes from the distribution steel that is placed perpendicular to the main reinforcing steel. Distribution steel—

- Carries tensile forces caused by changes and stresses induced by temperature.

- Is located in the bottom portion of the slab.
- Is also used in the top portion to tie the main reinforcement in place properly and to strengthen the slab.

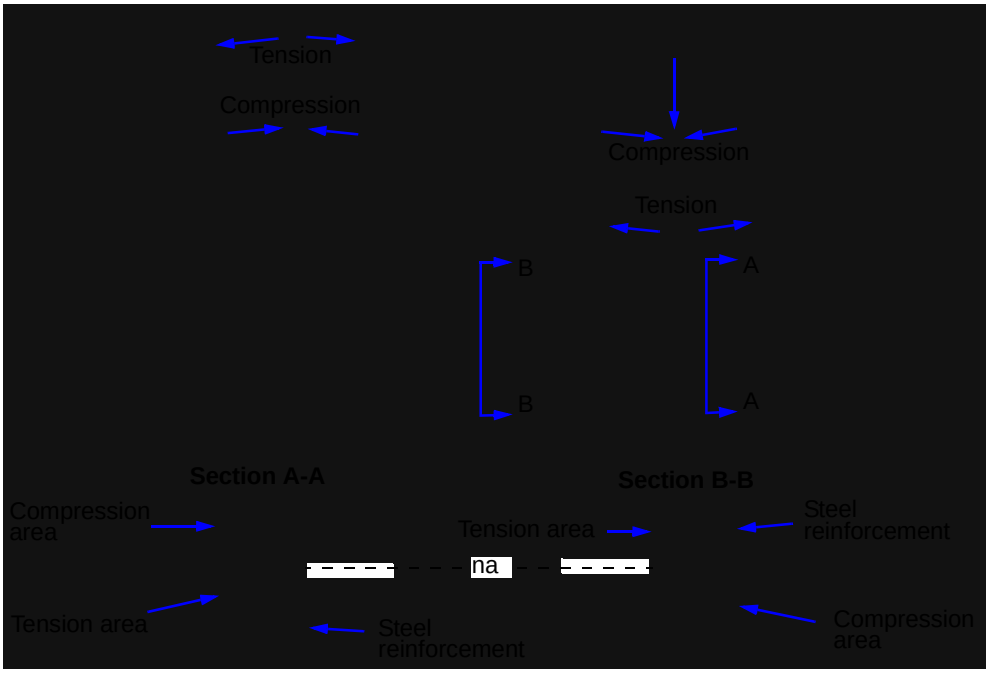

Figure G-2. Reinforcement Placement in Continuous Beams or Slabs

COLUMN REINFORCEMENT

G-24. A *column* is a slender, vertical member that carries a superimposed load. When the structure's height is less than three times its least lateral dimension, this structure is known as a *pier* or *pedestal*. Concrete columns must always have steel reinforcement because they are subject to bending. *Figure G-3* shows two types of column reinforcement. Vertical reinforcement is the main type. Lateral reinforcement consists of individual ties or a continuous spiral that surrounds the column.

FOOTING REINFORCEMENT

G-25. Steel reinforcement in footings and slabs that rest on the ground is located in the bottom portion of the footing since the bottom portion receives the tensile forces. The steel is placed so it runs in two directions, forming a series of squares or a grid *(Figure G-4)*.

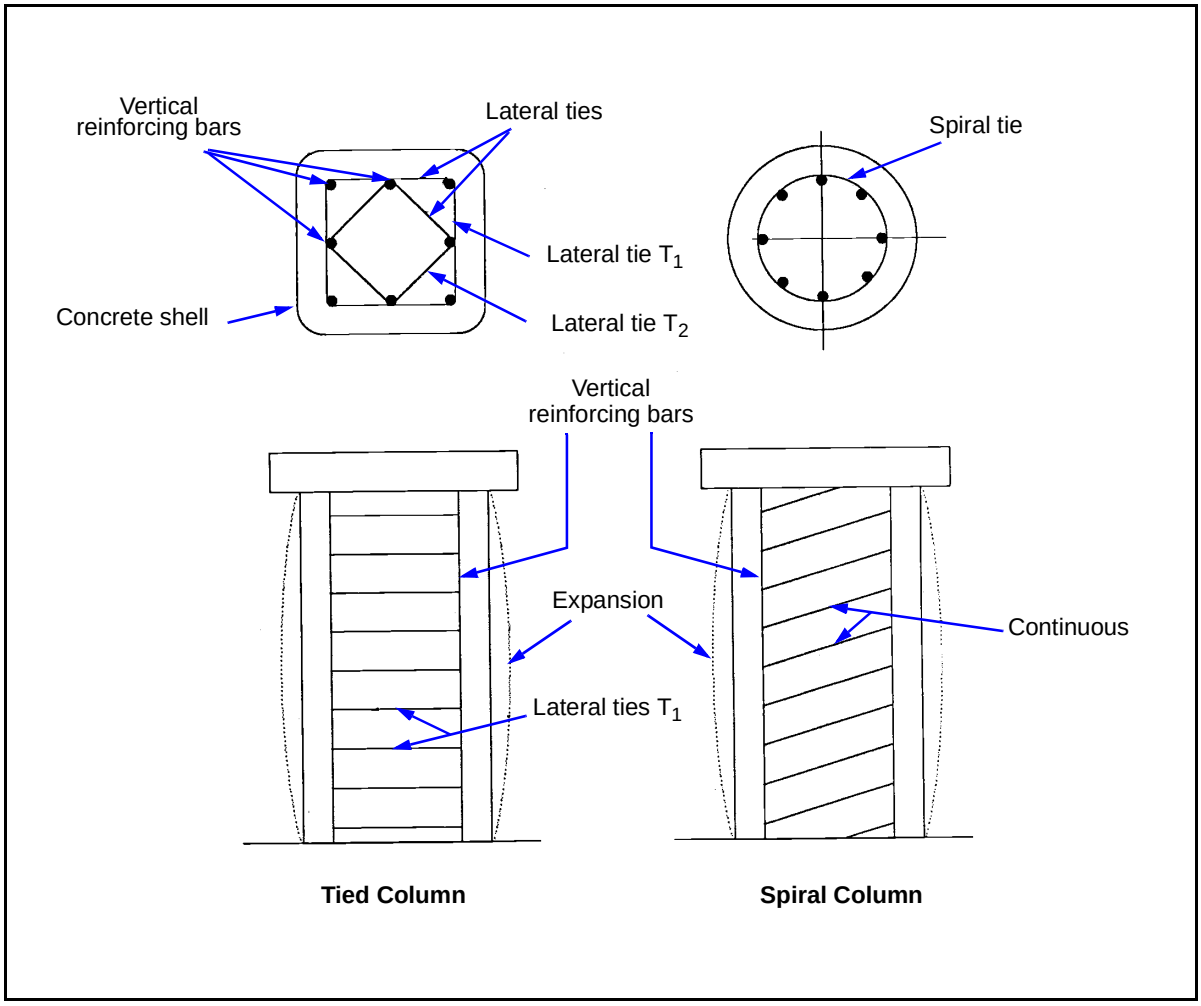

Figure G-3. Reinforced Concrete Columns

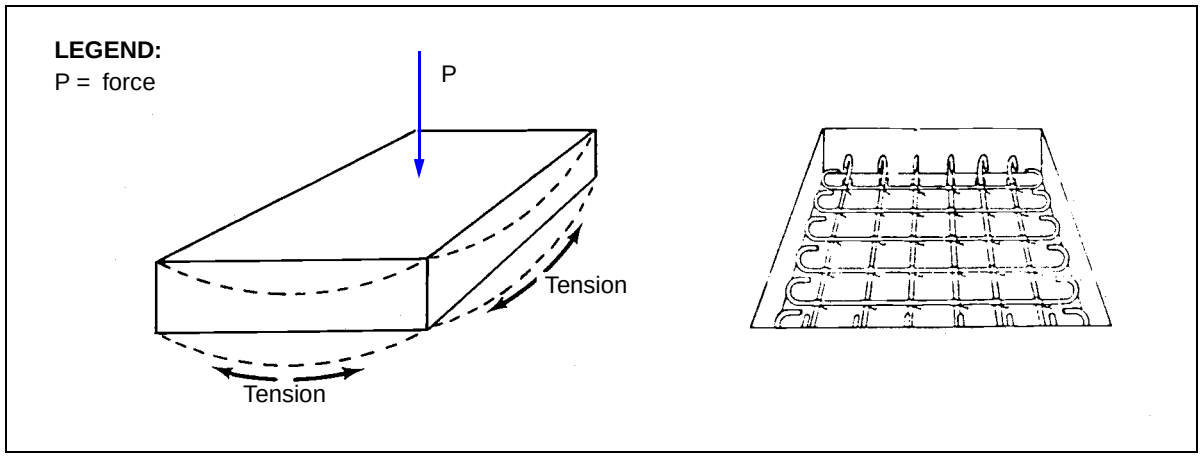

Figure G-4. Wall and Footing Reinforcement

ABUTMENT AND RETAINING-WALL REINFORCEMENT

G-26. Abutments and retaining walls have several sets of forces acting on them *(Table G-2* and *Figure G-5)*. First, there are the vertical loads placed on the stem and footing by bridge and soil loads. Second, there are the horizontal loads that result from the tendency of the bridge and soil loads to push the abutment or wall into the gap. Finally, there are horizontal bridge loads that tend to push the abutment away from the gap. The steel reinforcement is located in all areas of tension in these structures *(Figure G-6, page G-10)*.

Table G-2. Maximum Reinforcement Ratio

f'c (ksi)	Yield Strength (f_y) (ksi)									
	20	24	28	32	36	40	44	48	50	60
2.0	0.052	0.045	0.037	0.037	0.030	0.030	0.022	0.022	0.022	0.015
2.5	0.067	0.060	0.045	0.045	0.037	0.037	0.030	0.030	0.030	0.022
3.0	0.082	0.067	0.060	0.052	0.045	0.037	0.037	0.037	0.030	0.030
3.5	0.097	0.082	0.067	0.060	0.052	0.045	0.045	0.037	0.037	0.030
4.0	0.105	0.090	0.075	0.067	0.060	0.052	0.052	0.045	0.045	0.037
4.5	0.120	0.105	0.090	0.075	0.067	0.060	0.052	0.052	0.045	0.037
5.0	0.135	0.112	0.097	0.082	0.075	0.067	0.060	0.060	0.052	0.045
5.5	0.150	0.127	0.105	0.090	0.082	0.075	0.067	0.060	0.060	0.052
6.0	0.165	0.135	0.112	0.105	0.090	0.082	0.075	0.067	0.067	0.052

LEGEND:
f'c (ksi) = compressive strength

PRESTRESSED AND POSTSTRESSED CONCRETE

G-27. The principles for placing reinforcement in prestressed and poststressed concrete beams are the same as in normally reinforced concrete. However, the reinforcing steel is placed in tension when the beam is unloaded. This tension in the reinforcing steel causes compression in the concrete. The compression on the beam lowers the neutral axis and uses more of the compressive strength of the concrete to make the beam stronger. The two ways of creating tension in the steel reinforcement (installing tendons) are by prestressing or poststressing the steel.

G-28. In prestressed concrete, the tendons are placed in the bottom of the formwork, pulled very taut, and covered with the plastic concrete. Once the concrete gains sufficient strength, the tension on the tendons is released. When released, the tendons try to resume their original length, thus introducing compression into the lower portion of the beam. The compressive stress in the bottom of the beam counteracts the tension caused when the beam is loaded. The only difference between prestressing and poststressing is that in poststressing the tendons are stretched to the desired tautness after the concrete has reached the desired strength.

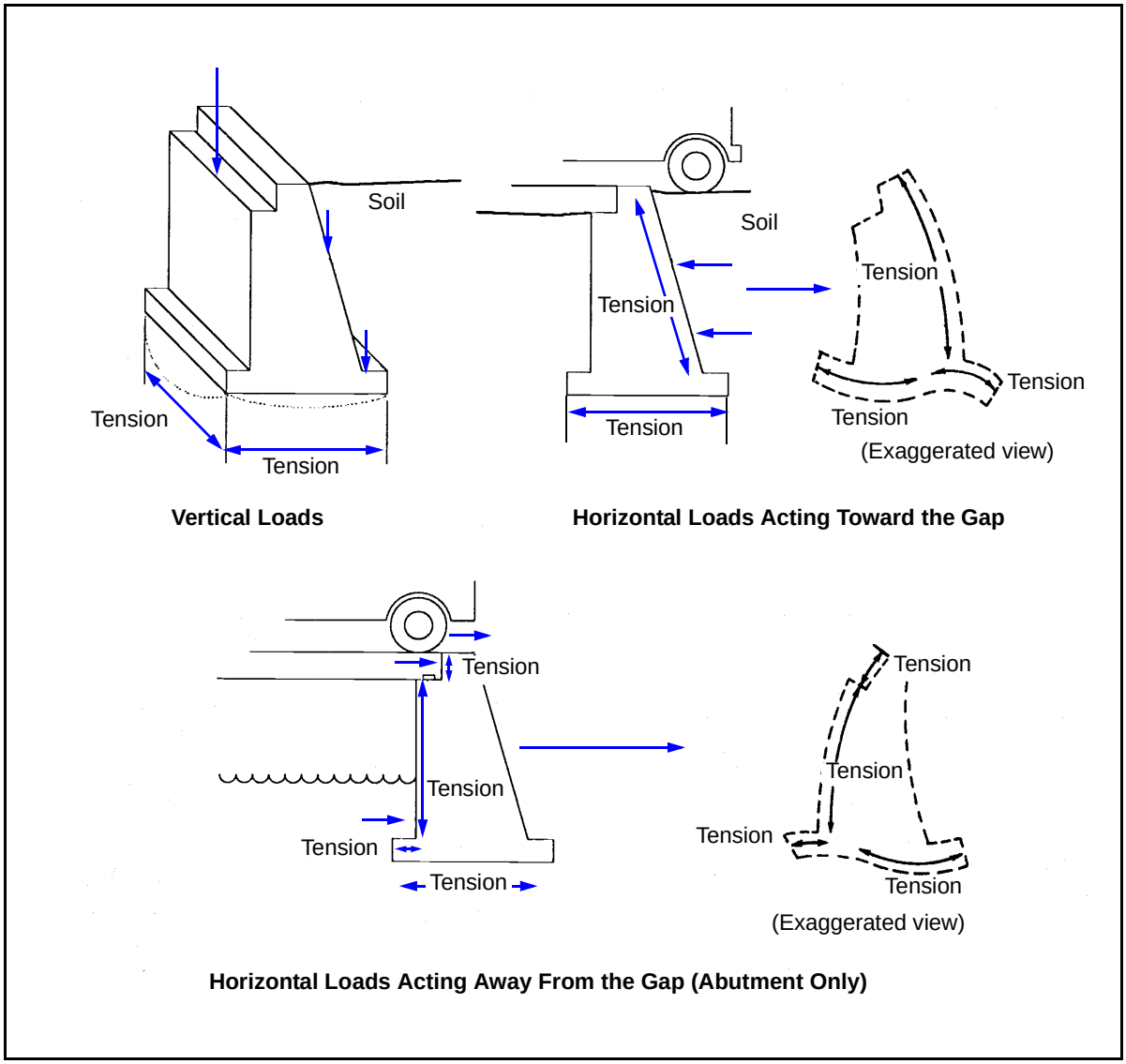

Figure G-5. Tension Forces in a Retaining Wall or Abutment

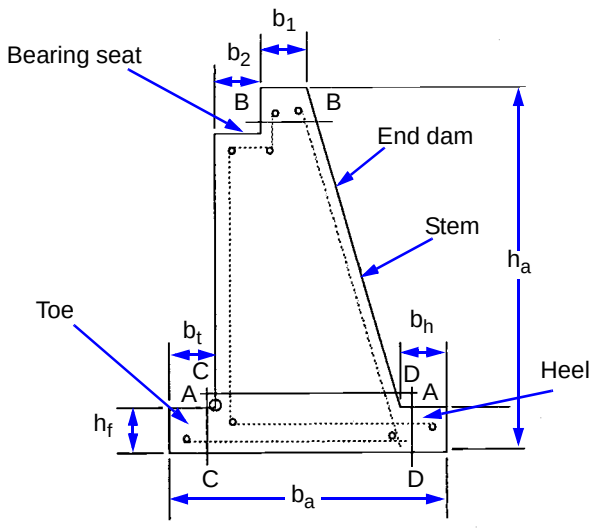

LEGEND:

h_a = abutment height
h_f = footing height (1′ to 2′)
b_1 = minimum of 12′
b_2 = bearing seat width (minimum 0.75′)
b_t = toe width (0.75′ to 1.5′ and 0.75 h_f)
b_a = footing width (0.4) h_a to 0.6 h_a)
b_h = heel width (0.75′ to 1.5′ and 0.75 h_f)

Figure G-6. Typical Reinforced Concrete Abutment

Appendix H

Soil Properties

Bridges ultimately transfer all of their loads to the earth. Unless the foundation is on bedrock, the bridge will transfer loads through the soil. This appendix provides approximate values for several key soil characteristics *(Table H-1; Tables H-2* and *H-3, page H-2;* and *Figure H-1, page H-3).* Due to the large degree of variance in these characteristics, the actual values from field tests should be obtained whenever possible.

Table H-1. Soil Properties

Soil Type	Characteristics	Symbol	Unit Weight (u) (lb/cu ft)	Angle of Internal Friction (θ) (deg)	Soil Bearing Capacity (ksf)
Sand	Loose and dry	SW to SP	89 to 107	31	3
	Loose and damp		99 to 117	31	3
	Loose and saturated		108 to 134	31	3
	Dense and dry		114 to 118	32.5	5
	Dense and damp		124 to 127	32.5	5
	Dense and saturated		134 to 137	32.5	5
	Compact and dry		121 to 127	33.5	10
	Compact and damp		128 to 135	33.5	10
	Compact and saturated		138 to 142	33.5	10
	Sand (sand clay)	SC	129 to 141	22 to 26	5
Gravel	Loose and dry	GW to GP	112 to 118	30	4
	Loose and damp		115 to 122	30	4
	Loose and saturated		136 to 142	30	4
	Dense and dry		136	33.5	12
	Dense and damp		140	33.5	12
	Dense and saturated		149	33.5	12
Clay	Sandy	CL (with sand)	114 to 135	16 to 22	5
	Stiff	CH	—	—	5
	Very stiff		—	—	6
Soil	Organic	OH	69 to 88	22 to 26	3
Rock	Soft and fractured	—	—	—	20
	Hard and solid	—	—	—	40

Table H-2. Friction Coefficients

Material	Friction Coefficient (K_f)
Concrete on concrete	0.65
Concrete on wood (with grain)	0.60
Concrete on wood (against grain)	0.50
Concrete on dry clay	0.50
Concrete on wet clay	0.33
Concrete on sand	0.40
Concrete on gravel	0.60

Table H-3. Friction Between Pile and Soil

Soil Type	Characteristics	Allowable Friction (ksf)[1]
Fine-grained soils	Mud	0.0125 ± 0.100
	Silt	0.1500 ± 0.100
	Soft clay	0.2000 ± 0.100
	Silty clay	0.3000 ± 0.100
	Sandy clay	0.3000 ± 0.100
	Medium clay	0.3500 ± 0.100
	Sandy silt	0.4000 ± 0.100
	Firm clay	0.4500 ± 0.100
	Dense, silty clay	0.6000 ± 0.150
	Hard (stiff) clay	0.7500 ± 0.200
Coarse-grained soils	Very loose sand and silt or clay	0.1000 ± 0.025
	Medium sand and silt or clay	0.2500 ± 0.050
	Dense sand and silt or clay	0.3500 ± 0.050
	Very dense sand and silt or clay	0.4500 ± 0.050
	Sand (all densities)	0.6000 ± 0.250
	Sand and gravel[2]	1.0000 ± 0.500
	Gravel	1.2500 ± 0.500

NOTES:

1. Allowable values are based on a safety factor of 2. Thus, the ultimate value is equal to twice the allowable value.

2. Apply this vaule if not micaceous, muddy, or under hydrostatic pressure or vibration.

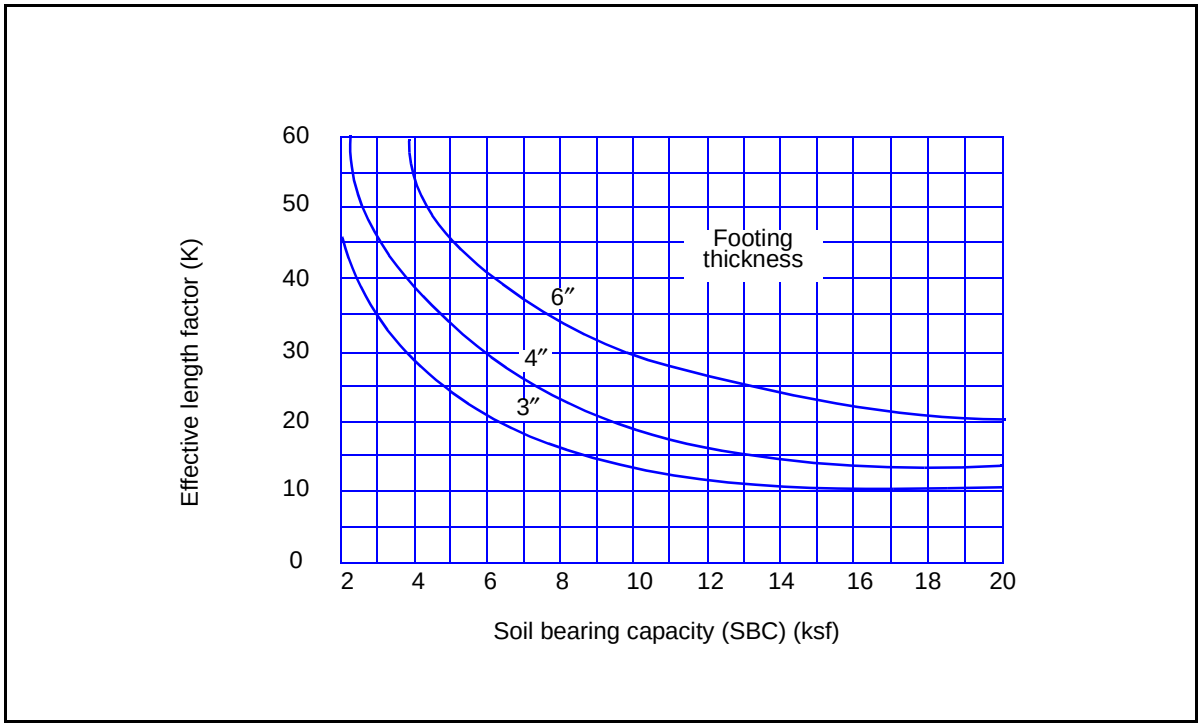

Figure H-1. Footing Length Factor

Appendix I

Superstructure Design Examples

This appendix contains superstructure design examples. Refer to *Chapter 6* for a detailed discussion of the equations.

NOTATIONS

I-1. This appendix contains superstructure design examples for a bridge using the analytical procedure. The following notations are used in this appendix:

A_f	= *area of compression flange, in square inches*
A_{pl}	= *bearing-plate area, in square inches*
A_S	= *reinforcing steel area per foot of slab width, in square inches*
A_{st}	= *required area of tension steel, in square inches*
A_t	= *cross-sectional area of one timber stringer, in square inches*
A_{temp}	= *area of temperature and shrinkage steel, in square inches*
b_c	= *cap or sill width, in inches*
b_f	= *flange width, in inches*
b_{pl}	= *plate width, in inches*
b_R	= *curb-to-curb roadway width, in feet*
b_S	= *stringer width, in inches*
C_S	= *slenderness factor (nondimensional)*
d'	= *effective depth, in inches*
d_b	= *nominal diameter of the bar, in inches*
d_{LL}	= *deflection due to live load plus impact, in inches*
d_{max}	= *maximum deflection*
d_o	= *depth of the equivalent rectangular stress block, in inches*
d_S	= *depth of the stringer, in inches*
E	= *modulus of elasticity, in ksi*
f'_B	= *actual bearing stress, in ksi*
f'_{bw}	= *actual bearing stress in the web, in ksi*
$f'c$	= *compressive strength of concrete, in psi*
f_y	= *yield strength of the reinforcing bars, in ksi*
F_b	= *maximum allowable bending stress of the member, in ksi*

F_B = *allowable bearing stress*

F_c = *allowable bearing of the supports perpendicular to the grain of the support material*

F_v = *maximum allowable shear stress, in ksi*

f'_v = *actual shear stress, in ksi*

F_y = *steel yield strength*

L = *span length, in feet*

L_b = *length of the braces, in feet*

L_c = *clear distance between supporting stringers, in feet*

L_e = *clear distance between stringer flanges, in feet*

L_u = *maximum unbraced length for timber, in feet*

m = *design moment per foot of stringer, in kip-feet*

m' = *design strength of the section, in kip-feet*

m'_{DL} = *estimated dead-load moment of the stringer, in kip-feet*

m'_{LL} = *design live-load moment per stringer, in kip-feet*

M = *moment from a concentrated load of the stringer, in kip-feet*

M_{DL} = *dead-load bending moment of the slab, in kip-feet per foot of width*

M'_{LL} = *total design live-load moment according to vehicle class, in kip-feet*

M_{LL} = *total live-load bending moment, in kip-feet*

M_{LL_T} = *live-load moment for tracked vehicle, in kip-feet*

M_{LL_W} = *live-load moment for wheeled vehicle, in kip-feet*

N_1 = *effective number of stringers for one-lane traffic*

N_2 = *effective number of stringers for two-lane traffic*

$N_{1,2}$ = *effective number of stringers for one- or two-lane traffic*

N_b = *number of lateral braces affecting dead load in the entire span*

N_S = *total number of stringers in the span*

P_{LL} = *critical concentrated live load per wheel, in kips*

P_{max} = *maximum single-axle load, in tons*

$req\ h$ = *required overall depth, in inches*

R_n = *strength coefficient of resistance, in psi*

R_S = *steel ratio*

R_{temp} = *minimum temperature reinforcement ratio*

S = *change in section modulus, in square inches*

S_{adj} = *adjusted effective span length, in feet*

S_{eff} = *effective span length, in feet*

S_{req} = *required section modulus, in cubic feet*

S_S = *actual center-to-center stringer spacing, in feet*

$t_{d_{req}}$ = *required deck thickness*

t_f = *flange thickness, in inches*

t_{pl} = *required plate thickness, in inches*

t_S = *thickness of stringer, in inches; thickness of slab, in inches*

t_w = *wearing-surface thickness, in inches*

t_{ws} = *thickness of the web of the stringer, in inches*

U_c = *unit weight for concrete, in pounds per cubic foot*

U_m = *unit weight of the material, in pounds per cubic foot*

U_w = *unit weight for wearing-surface material, in pounds per cubic foot*

v = *design shear per stringer, in kips*

v'_{DL} = *estimated dead-load shear per stringer, in kips*

v'_{LL} = *theoretical live-load shear per stringer, in kips*

V'_{LL} = *design live-load shear for wheeled vehicles, in kips*

v_{LL} = *live-load shear per stringer, in kips*

V_A = *heaviest axle load, in kips*

V_{LL_W} = *live-load shear per lane for wheeled vehicle, in kips*

V_{LL_T} = *live-load shear per lane for tracked vehicle, in kips*

w_{acc} = *assumed dead-load weight of the accessories, in kpf*

w_b = *weight of the lateral braces, in kpf*

w_d = *dead load due to the deck, in kpf*

w_{DL} = *dead-load weight of the deck, in kpf*

W_{DL} = *estimated dead load of the span, in kpf*

w'_{DL} = *actual dead load carried per stringer, in kpf*

W'_{DL} = *actual dead load of the span, in kips*

w_S = *assumed dead-load weight per stringer, in kpf*

w_w = *dead load due to the wearing surface, in kpf*

TIMBER-STRINGER SUPERSTRUCTURE WITH A TIMBER DECK

I-2. *Table I-1, pages I-4* through *I-8,* shows the procedure for designing a timber-stringer bridge with a timber deck. Design information, materials, and allowable stresses needed to construct this bridge are listed below.

- Class 50, two lanes, 12-foot-span timber deck.
- Douglas fir (dense, select structural; no information on splits), rectangular sections only.

I-3. The final design for this bridge is as follows:

Table I-1. Design Procedure for a Timber-Stringer Superstructure With a Timber Deck

Step	Equation/Procedure	Consideration	Computation
1	Minimum number of stringers	*Table 6-1* *MLC = 50*, 2 lanes	$N_s = 5$
2	$S_s = \frac{b_R}{N_s - 1}$	para 6-9 (eq 6-2)	$S_s = \frac{24}{5-1} = 6\ ft$
3	$L_c = S_s - \frac{t_s}{12}$ $S_{eff} = L_c + \frac{t_s}{24}$	para 6-11 (eq 6-3, 6-4) $t_s = 4\ in$	$L_c = 6 - \frac{4}{12} = 5.67\ ft$ $S_{eff} = 5.67 + \frac{4}{24} = 5.83\ ft = 70\ in$
4	Required deck thickness	para 6-16 *Figure 6-3* $S_{eff} = 70\ in$ *MLC = 50*	$t_{d_{req}} = 8.3\ in > 6\ in$ $\therefore$ use a laminated deck.
5	$S_{adj} = 0.75 S_{eff}$	para 6-19	$S_{adj} = (0.75)(5.83) = 4.37\ ft$
6	Required deck thickness	para 6-19 *Figure 6-3*	$t_{d_{req}} = 7.2\ in$
7	To further reduce deck thickness, increase the number of stringers to $N_s = 8$.	N/A	$S_s = \frac{24}{8-1} = 3.43\ ft$ $L_c = 3.43 - \frac{4}{12} = 3.10\ ft$ $S_{eff} = 3.10 + \frac{4}{24} = 3.26\ ft$ $t_{d_{req}} = 6.2\ in$
8	Curbs and handrails	para 6-43, 6-44	6- x 6-in timbers @ 5-ft centers 6- x 12- x 30-in risers
9	$w_{DL} = \left(\frac{b_s U_m t_s}{12{,}000}\right) + \left(\frac{b_R U_m t_w}{12{,}000}\right)$	para 6-47 (eq 6-21)	$w_{DL} = \left(\frac{(28)(50)(6.2)}{12{,}000}\right) + \left(\frac{(24)(150)(2)}{12{,}000}\right) = 1.32\ kpf$
10	$W_{DL} = w_{DL} + w_{acc} + w_s N_s$ $m'_{DL} = \frac{W_{DL} L^2}{8 N_s}$	para 6-47 (eq 6-22, 6-23)	$W_{DL} = 1.32 + 0.1 + (0.2)(8) = 3.02\ kpf$ $m'_{DL} = \frac{(3.02)(12^2)}{8(8)} = 6.80\ kip\text{-}feet$
11	M_{LL_W}	*Appendix B* *Table B-2* *L = 12 ft* *MLC = 50*	$M_{LL_W} = 125\ kip\text{-}feet$
12	M_{LL_T}	*Appendix B* *Table B-2* *L = 12 ft* *MLC = 50*	$M_{LL_T} = 138.5\ kip\text{-}feet$

Table I-1. Design Procedure for a Timber-Stringer Superstructure With a Timber Deck (continued)

Step	Equation/Procedure	Consideration	Computation
13	Effective number of stringers	para 6-51 *Table 3-3*	$S_s = 3.43$ ft: One lane: $N_1 = \frac{10}{S_s} = \frac{10}{3.43} = 2.92$ Two lanes: $N_2 = \frac{8.5}{S_s} = \frac{8.5}{3.43} = 2.48$
14	$m'_{LL} = \frac{1.15M'_{LL}}{N_{1,2}}$	para 6-51 (eq 6-24) Use the larger value of wheeled and tracked moment.	One lane: $m'_{LL} = \frac{(1.15)(138.5)}{2.92} = 54.54$ kip-feet Two lanes: $m'_{LL} = \frac{(1.15)(138.5)}{2.48} = 64.22$ kip-feet
15	$M = m'_{DL} + m'_{LL}$	para 6-52 (eq 6-25)	$M = 6.80 + 64.22 = 71.02$ kip-feet
16	Allowable stress	para 6-53	$F_b = 1.9$ ksi, $F_v = 0.85$ ksi, $F_c = 0.455$ ksi
17	Modulus of elasticity	N/A	$E = 1{,}700$ ksi
18	$S_{req} = \frac{12M}{F_b}$	para 6-55 (eq 6-26) *Table C-4*	$S_{req} = \frac{(12)(71.02)}{1.9} = 448.55$ in^3 Choose stringer size 12 in x 16 in.
19	$d_{LL} = \frac{331M'_{LL}L^2}{N_{1,2}ESd_s}$	para 6-58 (eq 6-27)	$d_{LL} = \frac{(331)(138.5)(12^2)}{(2.48)(1{,}700)(16)(448.55)} = 0.218$ in
20	$d_{max} = \left(\frac{L}{200}\right)12$	para 6-58	$d_{max} = \frac{12}{200}(12) = 0.72$ in $d_{LL} < d_{max} \therefore$ OK
21	Unbraced length	para 6-61	$L_u = \frac{1}{3}L = \frac{1}{3}(12) = 4$ ft $\therefore$ use $N_b = 4$
22	Effective beam length: If $\frac{12L_u}{d_s} \geq 14.3$, $L_e = 22.1L_u$ If $\frac{12L_u}{d_s} \leq 14.3$, $L_e = 19.6L_u + 3d_s$	para 6-61 (eq 6-28, 29)	$\frac{12L_u}{d_s} = \frac{(12)(4)}{16} = 3 < 14.3$ $L_e = (19.6)(4) + (3)(16) = 126.4$ in
23	$C_s = \sqrt{\frac{L_e d_s}{b_s^2}} \leq 50$	para 6-61 (eq 6-30)	$C_s = \sqrt{\frac{(126.4)(16)}{8^2}} = 5.62 \leq 50$
24	$w_d = \frac{b_s U_m t_s}{12{,}000}$	para 6-71 (eq 6-35)	$w_d = \frac{(28)(50)(6.2)}{12{,}000} = 0.723$ kpf

Table I-1. Design Procedure for a Timber-Stringer Superstructure With a Timber Deck (continued)

Step	Equation/Procedure	Consideration	Computation
25	$w_w = \frac{b_R U_m t_w}{12{,}000}$	para 6-72 (eq 6-36)	$w_w = \frac{(24)(150)(2)}{12{,}000} = 0.6\ kpf$
26	$w_s = \frac{A_t U_m N_s}{144{,}000}$	para 6-73 (eq 6-37)	$w_s = \frac{(12 \times 16)(50)(8)}{144{,}000} = 0.533\ kpf$
27	Accessories	para 6-75 (eq 6-39)	$w_{acc} = 0.1\ kpf$
28	$L_b = (N_s - 1)\left(S_s - \frac{t_{ws}}{12}\right)$ $w_b = \frac{(N_b - 2)L_b U_m}{L}$	para 6-76 (eq 6-42) (eq 6-41)	$L_b = (8-1)\left(3.43 - \frac{12}{12}\right) = 17.01\ ft$ $w_b = \frac{(4-2)(17.01)(0.1)}{12} = 0.284\ kpf$
29	$W'_{DL} = w_d + w_w + w_s + w_{acc} + w_b$	para 6-77 (eq 6-43)	$W'_{DL} = 0.723 + 0.6 + 0.533 + 0.1 + 0.284 = 2.24\ kpf$
30	$w'_{DL} = \frac{W'_{DL}}{N_s}$	para 6-78 (eq 6-44)	$w'_{DL} = \frac{2.24}{8} = 0.28\ kpf$
31	$w'_{DL} \leq \frac{W_{DL}}{N_s}$	para 6-79 (eq 6-45)	$\frac{W_{DL}}{N_s} = \frac{3.02}{8} = 0.378\ kpf$ $0.280\ kpf < 0.378\ kpf \quad \therefore$ OK
32	$v'_{DL} = \frac{w'_{DL} L}{2N_s}$	para 6-82 (eq 6-46)	$v'_{DL} = \frac{(0.280)(12)}{(2)(8)} = 0.21\ kips$
33	V_{LL_w}	*Appendix B Table B-3 L = 12 ft MLC = 50*	$V_{LL_w} = 50\ kips$
34	V_{LL_T}	*Appendix B, Table B-3 L = 12 ft MLC = 50*	$V_{LL_T} = 46.2\ kips$
35	V_A	*Appendix B Table B-1, Column 4 MLC = 50*	$V_A = 20\ kips$

Table I-1. Design Procedure for a Timber-Stringer Superstructure With a Timber Deck (continued)

Step	Equation/Procedure	Consideration	Computation
36	$v_{LL} = \left(0.5 + \frac{S_s}{32}\right)V_A + \left(\frac{V'_{LL} - V_A}{N_{1,2}}\right)$ $v_{LL} = \left(\frac{S_s - 2}{S_s}\right)V_A + \left(\frac{V'_{LL} - V_A}{N_{1,2}}\right)$ $v_{LL} = \frac{V'_{LL}}{2}$ $v_{LL} = \left(\frac{S_s - 2}{S_s}\right)V'_{LL}$	para 6-84 (eq 6-47, 6-48, 6-49, 6-50)	Choose the greater value of: $v_{LL} = \left(0.5 + \frac{3.43}{32}\right)(20) + \left(\frac{50 - 20}{2.92}\right) = 22.42 \text{ kips}$ $v_{LL} = \left(\frac{3.43 - 2}{3.43}\right)(20) + \left(\frac{50 - 20}{2.48}\right) = 20.43 \text{ kips}$ $v_{LL} = \frac{46.2}{2} = 23.1 \text{ kips}$ $v_{LL} = \left(\frac{3.43 - 2}{3.43}\right)(46.2) = 19.26 \text{ kips}$ $\therefore v_{LL} = 23.1 \text{ kips}$
37	$v'_{LL} = \left(\frac{L - 0.0833d_s}{L}\right)v_{LL} \geq 0.75v_{LL}$	para 6-85 (eq 6-51)	$v'_{LL} = \left(\frac{12 - 0.0833(16)}{12}\right)(23.1) = 20.53 \text{ kips}$ $(0.75)(23.1) = 17.33 \text{ kips}$ $20.53 \text{ kips} > 17.33 \text{ kips} \quad \therefore \text{OK}$
38	$v = v'_{DL} + 1.15v'_{LL}$	para 6-86 (eq 6-52)	$v = 0.21 + (1.15)(20.53) = 23.82 \text{ kips}$
39	$f'_v = \frac{3v}{2A_s} \leq F_v$	para 6-86 (eq 6-53)	$f'_v = \frac{(3)(23.82)}{(2)(12 \times 16)} = 0.186 > 0.085 \text{ ksi}$ $\therefore$ no good Choose stringer size 18 in x 24 in.

Table I-1. Design Procedure for a Timber-Stringer Superstructure With a Timber Deck (continued)

Step	Equation/Procedure	Consideration	Computation
40	Using the new stringer size of 18 in x 24 in (from step 39), recheck all necessary calculations from step 19 forward.	N/A	$d_{LL} = \frac{(331)(138.5)(12^2)}{(2.48)(1{,}700)(24)(448.55)} = 0.145 \text{ in}$ $d_{LL} < d_{max} = 0.72 \text{ in} \ \therefore$ OK $\frac{12L_u}{d_s} = \frac{(12)(4)}{24} = 2 < 14.3$ $L_e = (19.6)(4) + (3)(24) = 150.4 \text{ in}$ $C_s = \sqrt{\frac{(150.4)(24)}{(18)^2}} = 3.34 \le 50$ $w_s = \frac{(18 \times 24)(50)(8)}{144{,}000} = 1.2 \text{ kpf}$ $L_b = (8-1)\left(3.43 - \frac{18}{12}\right) = 13.51 \text{ ft}$ $w_b = \frac{(4-2)(13.51)(0.1)}{12} = 0.225 \text{ kpf}$ $W'_{DL} = (0.723 + 0.6 + 1.2 + 0.1 + 0.225) = 2.85 \text{ kpf}$ $w'_{DL} = \frac{2.85}{8} = 0.356 \text{ kpf}$ $0.356 \text{ kpf} < 0.378 \text{ kpf} \ \therefore$ OK $v'_{DL} = \frac{(0.356)(12)}{(2)(8)} = 0.267 \text{ kips}$ $v'_{LL} = \left(\frac{12 - 0.0833(24)}{12}\right)(23.1) = 19.25 \text{ kips}$ $19.25 \text{ kips} > 17.33 \text{ kips} \ \therefore$ OK $v = 0.267 + (1.15)(19.25) = 22.4 \text{ kips}$ $f'_v = \frac{(3)(22.4)}{(2)(18 \times 24)} = 0.0778 \text{ ksi}$ $0.0778 \text{ ksi} < 0.085 \text{ ksi} \ \therefore$ OK
41	$f'_b = \frac{v}{b_s b_c} \le F_B$	para 6-88 (eq 6-54) $bc = 8 \text{ in}$ $F_B = 2.04 \text{ ksi}$ *Table 6-8*	$f'_b = \frac{22.4}{(18)(8)} = 0.156 \text{ ksi}$ $0.156 \text{ ksi} < 2.04 \text{ ksi} \ \therefore$ OK

- Stringers: eight (each 18 x 24 inches).
- Deck: laminated (2 x 12 inches).
- Treadway: 2- x 12-inch planks.
- Curbs and handrails: standard design.
- Timber: Douglas fir (dense, select structural).

STEEL-STRINGER SUPERSTRUCTURE WITH A CONCRETE DECK

I-4. *Table I-2, pages I-9* through *I-13*, shows the procedure for designing a steel-stringer bridge with a concrete deck. Design information, materials, and allowable stresses needed to construct this bridge are listed below.

- Class 70, 2 lanes.
- Nominal sizes of all beams in *Table D-2, pages D-3* and *D-4* (A36 steel).
- Curb and handrail timber.
- 3,000 psi concrete.
- Grade-40 rebar for concrete deck.

Table I-2. Design Procedure for a Steel-Stringer Superstructure With a Concrete Deck

Step	Equation/Procedure	Consideration	Computation
1	Minimum number of stringers	*Table 6-1* *MLC = 70*, 2 lanes	$N_s = 5$
2	$S_s = \frac{b_R}{N_s - 1}$	para 6-9 (eq 6-2)	$S_s = \frac{24}{5-1} = 6\ ft$
3	$L_e = S_s - \frac{b_f}{12}$ $S_{eff} = L_e + \frac{b_f}{24}$	(eq 6-5) para 6-11 (eq 6-6)	$L_e = 6 - \frac{12}{12} = 5\ ft$ $S_{eff} = 5 + \frac{12}{24} = 5.5\ ft$
4	Concrete compressive strength	para 6-22	$f'c = 3{,}000\ psi$
5	Reinforcing steel yield strength	para 6-23	$f_y = 40\ ksi$
6	Slab thickness	para 6-24	$t_s = 7\ in$
7	Wearing surface	para 6-25	$t_w = 1.5\ in$
8	$w_{DL} = 1.4\left(\frac{t_s U_c + t_w U_w}{12{,}000}\right)$	para 6-26 (eq 6-7)	$w_{DL} = (1.4)\left(\frac{(7)(150) + (1.5)(150)}{12{,}000}\right) = 0.149\ kpf$
9	$M_{DL} = \frac{w_{DL} S_{eff}^{\ 2}}{10}$	para 6-26 (eq 6-8)	$M_{DL} = \frac{(0.149)(5.5^2)}{10} = 0.449\ kip\text{-}feet$
10	$P_{LL} = P_{max}$	para 6-28 (eq 6-9) *Appendix B Table B-1*	$P_{LL} = 25.5\ kips$
11	$M_{LL} = 1.564\left(\frac{S_{eff} + 2}{32}\right)P_{LL}$	para 6-28 (eq 6-10)	$M_{LL} = (1.564)\left(\frac{5.5 + 2}{32}\right)(25.5) = 9.35\ kip\text{-}feet$
12	$m = \frac{(M_{DL} + M_{LL})}{0.9}$	para 6-29 (eq 6-11)	$m = \frac{0.449 + 9.35}{0.9} = 10.89\ kip\text{-}feet$

Table I-2. Design Procedure for a Steel-Stringer Superstructure With a Concrete Deck (continued)

Step	Equation/Procedure	Consideration	Computation
13	B Factor	para 6-30	$B = 0.85$
14	Steel reinforcement ratio	para 6-30 *Table 6-5*	$R_s = 0.0139$
15	$R_n = R_s f_y - \left(\frac{R_s^2 f_y^2}{1.7 f'c}\right)$	para 6-31 (eq 6-12)	$R_n = (0.0139)(40{,}000) - \left(\frac{(0.0139^2)(40{,}000^2)}{(1.7)(3{,}000)}\right) = 495.39\ psi$
16	$req\ h = \sqrt{\frac{1{,}000m}{R_n}} + 1.125$	para 6-32 (eq 6-13)	$req\ h = \sqrt{\frac{(10.89)(1{,}000)}{495.39}} + 1.125 = 5.81\ in$ $\therefore$ use $t_s = 6.5\ in$
17	$d' = \sqrt{\frac{1{,}000m}{R_n}} + 0.5$	para 6-33 (eq 6-14) Assume No. 6 bars and a 3/4-in protective cover.	$d' = \sqrt{\frac{(10.89)(1{,}000)}{495.39}} + 0.5 = 5.19\ in$
18	$R_s = \frac{0.85 f'c}{f_y}\left[1 - \sqrt{1 - \frac{2{,}350m}{f'c(d')^2}}\right]$	para 6-34 (eq 6-15)	$R_s = \frac{(0.85)(3{,}000)}{40{,}000}\left[1 - \sqrt{1 - \frac{(2{,}350)(10.89)}{(3{,}000)(5.19)^2}}\right] = 0.0111$
19	$A_{st} = 12 R_s d'$	para 6-34 (eq 6-16)	$A_{st} = (12)(0.0111)(5.19) = 0.691\ in^2$
20	Bar-size selection and placement	para 6-35 *Table 6-6*	Select four No. 4 bars. $A_s = 0.80\ in^2$
21	Minimum clear spacing	para 6-36	*Min clear spacing = 1 in > d_b = 0.5 in, placed in one layer.*
22	Bar spacing	para 6-37 (eq 6-17)	$Bar\ spacing = \frac{10.5 - (4 \times 0.5)}{5 - 1} = 2.13\ in$
23	$d_o = \frac{A_{st} f_y}{10.2 f'c}$	para 6-38 (eq 6-18)	$d_o = \frac{(0.80)(40{,}000)}{(10.2)(3{,}000)} = 1.05\ in$
24	$m' = \left[A_{st} f_y \left(d' - \frac{d_o}{2}\right)\right]\frac{1}{12{,}000}$	para 6-38 eq 6-19	$m' = \left[(0.80)(40{,}000)\left(5.19 - \frac{1.05}{2}\right)\right]\frac{1}{12{,}000} = 12.44\ kip\text{–}feet$
25	$m' \geq m$	para 6-39	*12.44 kip-feet > 10.89 kip-feet* $\therefore$ OK
26	$A_{temp} = 12 R_{temp} d'$	para 6-40 (eq 6-20) $R_{temp} = 0.0020$	$A_{temp} = (12)(0.0020)(5.19) = 0.125\ in^2$ $min = (3)(7) = 21\ in \quad max = 18\ in$ Select two No. 3 bars. $A_{temp} = 0.22\ in^2$ *@ 18-in spacing*
27	Curbs and handrails	para 6-43, 6-44	Poured as part of the deck with drain holes @ 10-ft intervals on both sides of the bridge.

Table I-2. Design Procedure for a Steel-Stringer Superstructure With a Concrete Deck (continued)

Step	Equation/Procedure	Consideration	Computation
28	$w_{DL} = \left(\frac{b_s U_m t_s}{12{,}000}\right) + \left(\frac{b_R U_w t_w}{12{,}000}\right)$ $W_{DL} = w_{DL} + w_{acc} + w_s N_s$	para 6-47 (eq 6-22) (eq 6-21) $t_w = 0$	$w_{DL} = \left(\frac{(30)(150)(6.5)}{12{,}000}\right) = 2.44$ kpf $W_{DL} = 2.44 + 0.4 + (0.3)(5) = 4.34$ kpf
29	$m'_{DL} = \frac{W_{DL} L^2}{8 N_s}$	para 6-48 (eq 6-23)	$m'_{DL} = \frac{(4.34)(80^2)}{(8)(5)} = 694.4$ kip-feet
30	M_{LL_W}	*Appendix B* *Table B-2* *L = 80 ft* *MLC = 70*	$M_{LL_W} = 2{,}460$ kip-feet
31	M_{LL_T}	*Appendix B* *Table B-2* *L = 80 ft* *MLC = 70*	$M_{LL_T} = 2{,}540$ kip-feet
32	Effective number of stringers	para 6-51 *Table 3-3*	*For $S_s = 6$ ft:* One lane: $N_1 = \frac{14}{S_s} = \frac{14}{6} = 2.33$ Two lanes: $N_2 = \frac{11}{S_s} = \frac{11}{6} = 1.83$
33	$m'_{LL} = \frac{1.15 M'_{LL}}{N_{1,2}}$	para 6-51 (eq 6-24) Use the larger value of wheeled and tracked moment.	One lane: $m'_{LL} = \frac{(1.15)(2{,}540)}{2.33} = 1{,}253.65$ kip-feet Two lanes: $m'_{LL} = \frac{(1.15)(2{,}540)}{1.83} = 1{,}596.17$ kip-feet
34	$M = m'_{DL} + m'_{LL}$	para 6-52 (eq 6-25)	$M = 694.4 + 1{,}596.17 = 2{,}290.57$ kip-feet
35	Allowable stress	para 6-55 *Table 6-7*	$F_y = 36$ ksi $F_b = 0.75 F_y = (0.75)(36) = 27$ ksi $F_v = 0.45 F_y = (0.45)(36) = 16.2$ ksi
36	Modules of elasticity	N/A	$E = 29 \times 10^3$ ksi
37	$S_{req} = \frac{12M}{F_b}$	para 6-56 (eq 6-26) Table D-2	$S_{req} = \frac{(12)(2{,}290.57)}{27} = 1{,}018.03\ in^3$ Choose W36x280.
38	$d_{LL} = \frac{331 M'_{LL} L^2}{N_{1,2} E S d_s}$	para 6-58 (eq 6-27)	$d_{LL} = \frac{(331)(2{,}540)(80^2)}{(1.83)(29{,}000)(36.52)(1030)} = 2.69$ in
39	$d_{max} = \left(\frac{L}{200}\right)12$	para 6-58	$d_{max} = \left(\frac{80}{200}\right)(12) = 4.8$ in $d_{LL} = 2.69$ in $< d_{max} = 4.8$ in $\therefore$ OK

Table I-2. Design Procedure for a Steel-Stringer Superstructure With a Concrete Deck (continued)

Step	Equation/Procedure	Consideration	Computation
40	$L_c = \frac{6.33 b_f}{\sqrt{F_y}}$ or— $L_c = \frac{1{,}667}{(d_s/A_f)F_y}$	para 6-64 (eq 6-31, 32) Use the smaller value.	$L_c = \frac{(6.33)(16.595)}{\sqrt{36}} = 17.51$ ft or— $L_c = \frac{1{,}667}{(36.52/26.05)(40)} = 29.73$ ft $\therefore$ use $L_c = 17.51$ ft
41	$N_b = \frac{L}{L_c} + 1$	para 6-65 (eq 6-33)	$N_b = \frac{80}{17.51} + 1 = 5.57$ $\therefore$ use $N_b = 6$
42	$L_u = \frac{L}{N_b - 1}$	para 6-66 (eq 6-34)	$L_u = \frac{80}{6-1} = 16.0$ ft $\therefore$ use 6 braces @ 16.0 ft along the bridge span. Choose diaphragms W18x65.
43	$w_d = \frac{b_s U_m t_s}{12{,}000}$	para 6-71 (eq 6-35)	$w_d = \frac{(30)(150)(6.5)}{12{,}000} = 2.44$ kpf
44	$w_w = \frac{b_R U_m t_w}{12{,}000}$	para 6-72 (eq 6-36) $t_w = 0$	$w_w = 0$
45	$w_S = \frac{W_s N_s}{1{,}000}$	para 6-74 (eq 6-38)	$w_S = \frac{(280)(5)}{1{,}000} = 1.4$ kpf
46	Accessories	para 6-75 (eq 6-39)	$w_S = w_{acc} = 0.4$ kpf
47	$L_b = (N_s - 1)\left(S_s - \frac{t_{ws}}{12}\right)$ $w_b = \frac{(N_b - 2)L_b U_m}{L}$	para 6-76 (eq 6-42) para 6-76 (eq 6-41)	$L_b = (5-1)\left(6 - \frac{0.885}{12}\right) = 23.71$ ft $w_b = \frac{(6-2)(23.71)(0.065)}{80} = 0.077$ kpf
48	$W'_{DL} = w_d + w_w + w_s + w_{acc} + w_b$	para 6-77 (eq 6-43)	$W'_{DL} = 2.44 + 0 + 1.4 + 0.4 + 0.077 = 4.32$ kpf
49	$w'_{DL} = \frac{W'_{DL}}{N_s}$	para 6-78 (eq 6-44)	$w'_{DL} = \frac{4.32}{5} = 0.863$ kpf
50	$w'_{DL} \le \frac{W_{DL}}{N_s}$	para 6-79 (eq 6-45)	$\frac{W_{DL}}{N_s} = \frac{4.34}{5} = 0.868$ kpf $0.863 < 0.868$ kpf $\therefore$ OK
51	$v'_{DL} = \frac{w'_{DL} L}{2N_s}$	*para 6-82* *(eq 6-46)*	$v'_{DL} = \frac{(0.863)(80)}{2(5)} = 6.90$ kips
52	V_{LL_w}	*Appendix B* *Table B-3* *L = 80 ft* *MLC = 70*	$V_{LL_w} = 63.79$ kips

Table I-2. Design Procedure for a Steel-Stringer Superstructure With a Concrete Deck (continued)

Step	Equation/Procedure	Consideration	Computation
53	V_{LL_T}	*Appendix B Table B-3 L = 80 ft MLC = 70*	$V_{LL_T} = 63.44$ *kips*
54	V_A	*Appendix B Table B-1, Column 4 MLC = 70*	$V_A = 25.5$ *kips*
55	$v_{LL} = \left(0.5 + \frac{S_s}{32}\right)V_A + \left(\frac{V'_{LL} - V_A}{N_{1,2}}\right)$ $v_{LL} = \left(\frac{S_s - 2}{S_s}\right)V_A + \left(\frac{V'_{LL} - V_A}{N_{1,2}}\right)$ $v_{LL} = \frac{V'_{LL}}{2}$ $v_{LL} = \left(\frac{S_s - 2}{S_s}\right)V'_{LL}$	para 6-84 (eq 6-47, 48, 49, 50)	Choose the greater value of: $v_{LL} = \left(0.5 + \frac{6}{32}\right)(25.5) + \left(\frac{63.79 - 25.5}{2.33}\right) = 33.96$ *kips* $v_{LL} = \left(\frac{6-2}{6}\right)(25.5) + \left(\frac{63.79 - 25.5}{1.83}\right) = 37.92$ *kips* $v_{LL} = \frac{63.44}{2} = 31.72$ *kips* $v_{LL} = \left(\frac{6-2}{6}\right)(63.44) = 42.29$ *kips* $\therefore v_{LL} = 42.29$ *kips*
56	$v'_{LL} = \left(\frac{L - 0.0833d_s}{L}\right)v_{LL} \geq 0.75v_{LL}$	para 6-85 (eq 6-51)	$v'_{LL} = \left[\frac{80 - (0.0833 \times 36.52)}{80}\right](42.29) = 128.65$ *kips* $(0.75)(42.29) = 31.72$ *kips* *128.65 kips > 31.72 kips* $\therefore$ OK
57	$v = v'_{DL} + v'_{LL}$	para 6-86 (eq 6-52)	$v = 6.90 + 128.65 = 135.55$ *kips*
58	$f'_v = \frac{3v}{2A_s} \leq F_v$	para 6-86 (eq 6-53)	$f'_v = \frac{(3)(135.55)}{(2)(82.4)} = 2.47$ *ksi* < 16.2 *ksi* $\therefore$ OK
59	$A_{pl} = \frac{v}{F_B}$	para 6-92 (eq 6-55) $F_B = 0.75F_y$	$A_{pl} = \frac{135.55}{(0.75)(36)} = 5.02$ *in*^{2}
60	Plate width and length	para 6-93	*min length = 6 in* *min area* $= 6b_f = (6)(16.595) = 99.57$ *in*^{2} $\therefore$ *set area* $= 99.52$ *in*^{2}
61	$f'_B = \frac{v}{b_{pl}b_c}$	para 6-94 (eq 6-56)	$f'_B = \frac{135.55}{(16.595)(6)} = 1.36$ *ksi*
62	$t_{pl} = \sqrt{\frac{3f'_B\left(\frac{b_{pl}}{2} - t_f\right)^2}{F_b}}$	para 6-94 (eq 6-57)	$t_{pl} = \sqrt{\frac{(3)(1.36)\left(\frac{16.595}{2} - 1.57\right)^2}{27}} = 2.62$ *in* $\therefore$ use 11 plates @ 1/4 in each, laminated and fully welded up to reach the minimum thickness of 2.62 in.
63	$f'_{bw} = \frac{v}{t_w(b_c + t_f)} \leq f_B$	para 6-95 (eq 6-58) $F_B = 0.90F_y$	$f'_{bw} = \frac{135.55}{(0.885)(6 + 1.570)} = 20.23$ *ksi* < 32.4 *ksi* $\therefore$ OK
64	End-bearing stiffeners	para 6-96	Not needed.

I-5. The final design for this bridge is as follows:

- Stringers: five (each W36x280).
- Deck: 6.5-inch-thick reinforced concrete.
- No. 4 bars @ 3 inches (main reinforcing steel).
- No. 3 bars @ 12 inches (temperature steel).
- Curbs and handrails: standard design.
- Bracing: W18x65 @ 13.33 feet.
- Bearing plate: six $^{1}/_{32}$-inch plates, laminated and fully welded (6 x 16.595).
- No end-bearing stiffeners.

Glossary

$\int$	integral
Δ	difference in; change in
γ	gamma
π	pi
$\therefore$	therefore; hence
ϕ	diameter
$\approx$	nearly equal to
θ	angle
@	at that point
AASHTO	American Association of State Highway and Transportation Officials
abutment	a substructure supporting the end of a superstructure that retains or supports the approach embankment. *See also* **retaining wall** *and* **wing wall**
adfreezing	the process by which one object becomes adhered to another by the binding action of ice
AFCS	Army Facilities Components System
aggregate	the sand, gravel, or broken stone mixed with cementing material to form a mortar or concrete. The fine material used to produce mortar for stone and brick masonry and for the mortar component of concrete is commonly termed *fine aggregate*. The coarse material used in concrete only is termed *coarse aggregate*
AISC	American Institute of Steel Construction
allowable unit stress	the stress per unit of area of the structure material determined to be a safe amount for use (based on quality, condition, and so forth)
allowance	*see* **impact load**
anchorage	all members and parts that hold the anchor span of a cantilever bridge in the correct position
anchor bolt	a bolt-like piece of metal threaded and fitted with a nut or a nut and washer at one end only used to fix members of a structure in position
anchor span	the span of a cantilevered bridge that is connected to the moment-resisting support. *See also* **cantilever girder**
angle of internal friction	*see* **angle of repose**

angle of repose	the batter or slope angle at which a given soil will slide from a higher to a lower elevation; the angle below which the particles of earth are held in equilibrium by the forces of gravity and friction
angle of skew	*see* **skew angle**
anisotropy	the property of exhibiting different strengths in different directions
AO	area of operation
approach slab	a heavy, reinforced concrete slab placed on the approach roadway adjacent to and resting on the abutment back wall to carry wheel loads on the approaches directly to the abutment
approx	approximately
apron	a timber, concrete, riprap, paving, or other construction shield that is placed adjacent to substructure abutments and piers to prevent scour
AR	Army regulation
arch	a bow-shaped, nonrigid structure that produces both vertical and horizontal reactions at its supports
arch barrel	an arch ring that extends the width of the structure
arched abutment	*see* **spill-through abutment**
arch rib	the curved members used in open-spandrel bridges. Ribs stretch the length of the arch and are often parallel to each other with spandrels running between them
arm	the portion of a drawbridge that forms part or all of the span; the rear or counterweight leaf of a bascule span; the overhanging part of a cantilever bridge that supports the suspended span; the perpendicular distance between the two parallel equal and opposite forces of a moment
armor	a secondary steel member that is installed to protect a vulnerable part of another member (such as steel angles placed over the edges of a joint)
ASTM	American Society for Testing and Materials
AVLB	armored vehicle-launched bridge
axle load	the load borne by one axle of a traffic vehicle, a movable bridge, or other motive equipment or device and transmitted through a wheel or wheels to a supporting structure. *See also* **wheel concentration**
backfill	soil (usually granular) placed behind and within the abutment and wing walls to fill the unoccupied part of the foundation excavation
backstay	the part of the main suspension member of a suspension bridge that extends between the tower and the anchorage to resist overturning stresses exerted on the tower by the suspension span. When the backstay extends over the towers, it no longer supports any portion of the bridge's floor system between the tower and the anchorage
back wall	the topmost portion of an abutment above the elevation of the bridge seat that functions as a retaining wall with a live-load surcharge or as a support for the bridge deck and the approach slab

backwater a section of water with an elevation that is increased above normal because of a condition downstream (such as a flood or an ice jam) or because of stream-width contraction beneath a bridge)

balance blocks blocks of cast iron, stone, concrete, or other heavy material used to adjust the counterbalance of swing and lift spans

balance wheel one of the wheels attached to the superstructure to maintain the proper balance and lateral stability of the structure by preventing excess rocking or other motion due to wind pressure, shock from operating irregularities, and so forth. When correctly adjusted, the wheel will transmit only its own weight to the track and will revolve without load on its axle

balancing chain *see* **counterbalancing chain**

ballast filler material (usually broken stone or masonry) used either to stabilize a structure or to transmit a vertical load to a lower level

baluster one of a set of small pillars supporting a handrail

balustrade a handrail supported by balusters

barbed anchor bolt *see* **ragged anchor bolt**

bascule bridge a bridge with a superstructure that swings vertically about a horizontal axis

bascule span a span of a bridge that swings vertically about a horizontal axis

base coat *see* **priming coat**

base metal the metal at and adjacent to the surface to be incorporated in a welded joint that will be fused and which will produce a welded joint through coalescence and interdiffusion with the weld

base plate a plate-shaped piece of steel that is made an integral part of the base of a column, a pedestal, or another member. It transmits and distributes its load directly to the substructure or to another member

batten plate a plate that covers the joint formed by two abutting metal plates or shapes but does not transmit stress from one to the other; one used instead of lacing to tie together the shapes comprising a built-up member; one in which the bar latticing or lacing of a bolted, riveted, or welded member terminates (sometimes used synonymous with *stay plates*). *See also* **stay plate**

batter the inclination of a surface in relation to a horizontal, a vertical, or, occasionally, an inclined plane (commonly noted on detail plans as so many inches to one foot). *See also* **rake**

batter pile a pile driven in an inclined position to resist forces that act in other than a vertical direction. It may withstand these forces or be a subsidiary part of a structure to improve its rigidity. When driven and made fast on the end of a pile bent or pier in a waterway, it acts as a cutwater to divide and deflect floating ice and debris

bay the area between adjacent stringers of a multibeam structure

bead a narrow, continuous deposit of weld metal in a single pass of fused filler metal

beam a piece receiving and transmitting transverse or oblique stresses from externally applied loads when supported at intermediate points or ends. The beam derives its strength from internal bending or flexural stresses. It can be rolled, I-shaped or H-shaped metal; I-shaped metal made of plates and angles; or other shapes bolted, riveted, or welded together (built-up beams)

bearing failure a crushing under an extreme compressive load on an inadequate support; a shear failure in the supporting soil when a footing or pile applies excessively high pressures

bearing pad a thin sheet of material placed between a masonry plate and the masonry-bearing surface. It is used to fill voids caused by imperfection of the masonry plate and bearing surface, to seal the interface, and to aid in even distribution of loads at the interface

bearing pile a pile that receives its support in bearing through the tip or lower end of the pile

bearing plate a steel plate placed between stringers and the supporting seat to distribute vertical bridge loads and to prevent crushing or flange- and web-bending failures

bearing seat a prepared horizontal surface at or near the top of a substructure unit upon which the superstructure bearings are placed

bedrock a natural mass formation of sedimentary or metamorphic rock

benchmark a point of known elevation and location

bent a supporting unit of a trestle or viaduct structure made of two or more columns or column-like members connected by a cap, a strut, or another member. This connecting member distributes superimposed loads on the bent. When combined with a system of diagonal or horizontal bracing attached to the columns, the entire construction functions somewhat like a truss distributing its loads into the foundation

berm the line of intersection between the top surface of an approach embankment or causeway and the surface of the side slope; a horizontal bench located at the toe of the slope of an approach cut, embankment, or causeway to strengthen and secure its underlying material

blanket a streambed protection placed adjacent to abutments and piers and covering the streambed for an adequate distance to resist scour; a deposit of stones of varying sizes or a timber framework loaded with stones or adaptable ballasting material for ballasting and protecting from displacement

block abutment *see* **straight abutment**

bollard one of a series of short posts that is used for diverting or excluding motor vehicles from a road

bolster a block-like wood, metal, or concrete member that supports a bearing on top of a pier cap or abutment bridge seat. It adjusts bearing heights (thus avoiding bridge-seat construction to the crown of the roadway), provides an area that may be ground to a precise elevation, or raises a bearing above moisture and debris that may collect on the bridge seat. S*ee also* **bridge pad**

bolted joint *see* **riveted joint**

bond the grip of concrete on reinforcing bars that prevents slippage; the mechanical force developed between two concrete masses when one is cast against the already hardened surface of the other

bond stress the stress developed by the force tending to produce movement or slippage at the interface between the concrete and the metal reinforcement bars or other shapes in reinforced concrete construction

bowstring truss any truss with its top-chord members polygonally arranged like a parabolic truss; one with a top chord conforming to the arc of a circle or an ellipse. *See also* **parabolic truss**

box beam a rectangular-shaped precast and prestressed concrete beam. These beams may be side by side or connected laterally and are used to form a bridge deck with or without a cast-in-place slab or topping. The units act similar to a slab. They act as a beam when spread and when a cast-in-place slab is used

bracing a system of tension and/or compression members connected to the main members of a structure for support. This system transfers wind, dynamic, impact, and vibratory stresses to the substructure and gives rigidity throughout the complete assemblage. Types of bracing include lateral (which resists transverse forces) and longitudinal (which resists longitudinal forces). *See also* **cross frames; diaphragm; sway brace;** *and* **transverse bracing**

bracket a projecting support or brace fixed on two intersecting members to transfer reactions or shear stress from one to the other, to strengthen and render a joint connection of the members more rigid, or to fix one member in position

breast wall the portion of an abutment between the wings and beneath the bridge seat that supports the superstructure loads and retains the approach fill. *See also* **face wall** *and* **stem**

brick veneer *see* **stone facing**

bridge a structural means of transit for pedestrians or vehicles above the land or water surface (whether natural or artificial). The essential parts of a bridge are the substructure with its abutments and/or piers supporting the superstructures; the superstructure slab, girder, truss, arch, or other spans supporting the roadway loads and transferring them to the substructure; and the roadway receiving and transmitting traffic loads. *See also* **culvert**

bridge pad the raised, leveled area on which the pedestal, shoe, sole, plate, or other members take bearing by contact. *See also* **bolster**

bridge seat the top surface of an abutment or pier that holds and supports the superstructure span. For an abutment, it is the surface forming the support for the superstructure and from which the back wall rises. For a pier, it is the entire top surface

bridge-seat bearing area *see* **bridge pad**

bridge-seat pedestal a block-like member between the bridge seat and the bearings that supports the superstructure. *See also* **bolster**

bridge site the selected position or location of a bridge

bridging the cross bracing fastened between wooden floor stringers (usually at the one-third span points) to increase the floor rigidity, uniformly distribute the live load, and minimize the effects of impact and vibration

brush curb a narrow curb (9 inches wide or less) that prevents a vehicle from brushing against the railing or parapet

buckle to fail by an inelastic change in alignment, usually because of compression

buffer a mechanism designed to absorb the concussion or impact of a moving superstructure or another part when it swings, rises, or falls to its limiting position of motion

built-up column a column comprised of several plates and angles or other shapes united by bolting, riveting, or welding to render the entire assemblage a unit. Commonly described as a *plate girder*

built-up girder *see* **built-up column**

bulkhead a retaining timber, steel, or reinforced concrete structure or a barrier of wooden timbers. Bulkheads consist of driven piles supporting a wall or a wall-like structure resisting the earth or other material and preventing sliding and overturning

bumper *see* **buffer**

buttress a bracket-like wall that projects from a wall to strengthen and stiffen it against overturning forces that are applied to the opposite face. A buttress must touch the wall it reinforces, although it may be integral with or independent of it. All parts of a buttress act in compression. *See also* **counterfort**

buttressed wall a retaining wall with projecting buttresses to provide strength and stability

butt weld a weld that joins two members end to end

cable one of the main members of a suspension bridge that receives bridge floor loads and transmits them to the towers and anchorages. *See also* **suspension bridge**

cable band a steel casting with bolts or other fasteners fixing it securely on the cable of a suspension bridge and preventing the band from slipping from its correct location

camber the slight arch or convex curvature provided in a span structure to compensate for dead-load deflection and to secure a more substantial and aesthetic appearance than uniformly straight lines produce; the superelevation given to the extreme ends of a swing span during erection to diminish the deflection (droop) of the arms when in the open position, cantilevered from the center bearing; a projecting beam, truss, or slab supported at one end only

cantilever abutment an abutment in which the stem or breast wall is fixed rigidly to the footing. Acting as a cantilever beam, the stem transmits the horizontal earth pressure to the footing, which maintains stability by virtue of the dead weight of the abutment and of the soil mass resting on the rear portion (or heel) of the footing

cantilever beam *see* **cantilever girder**

cantilever bridge a bridge with a cantilevered superstructure

cantilever girder a girder or truss with its members or parts arranged so that one or both of its end portions extend beyond the point or points of support. The girder may consist of two projecting ends counterbalanced over a center support, two projecting ends with an intermediate suspended portion in which the weight is completely counterbalanced by the anchor spans or anchorages, or a projecting end counterbalanced by a portion extending in the opposite direction beyond the point of support or by an uplift-resisting anchorage

cantilever span a superstructure span of a cantilever bridge composed of two cantilever arms or of a suspended span connected with one or two cantilever arms

cantilever truss *see* **cantilever girder**

cap the top piece or member of a viaduct, trestle, or frame bent serving to distribute the loads on the columns and to hold them in their proper relative positions. *See also* **pier cap** *and* **pile cap**

capillary action the process by which water is drawn from a wet area and transported to a dry area through the pores of a material

capstone the top stone of a masonry pillar, a column, or another structure requiring the use of a single capping element; one of the stones used in constructing a stone parapet to make up its top (weather) course

catch basin a box-shaped receptacle fitted with a grilled inlet and a pipe outlet drain to collect rain water and floating debris from the roadway surface and to retain solid material for periodic removal. Catch basins are usually installed beneath a bridge floor or within the approach roadway, with the grilled inlet adjacent to the roadway curb

catchment area *see* **drainage area**

catwalk a narrow, permanent or temporary walkway for access to some part of a structure. *See also* **inspection ladder**

cellular abutment an abutment of reinforced concrete boxes in which the space between the wings, the breast wall, the approach slab, and the footings is hollow. On some bridges, curtain walls between the pier and the abutment simulate a cellular abutment

cement matrix the binding medium in mortar or concrete produced by hardening cement

cement paste the plastic combination of cement and water that supplies the cementing action in concrete

center bearing all parts (including pedestal castings, the pivot, and discs) that support the entire dead load of a swing span when the end lifts are released or the span is revolving open or closed

center discs the bronze, steel, or other metal enclosed in the pivot of a center-bearing swing span to reduce its frictional resistance

centering the support for formwork for any slab, beam, or other horizontal concrete structure on which the arch ring is constructed. Centering is usually timber or metal framework, with its top portion shaped to conform with the arch intrados and covered with lagging or with bolsters spaced to permit treatment of the mortared joints of stone masonry

centering device the mechanical arrangement or device that guides the span of a bascule or a vertical lift to its position on its supports when moving from open to closed

center lock a locking device that transmits shear at the centerline of a double-leaf bascule or double-swing span bridge. This device eliminates deflection and vibration at the center of the span

center wedges the assembly of pedestals and wedges located upon the pivot pier beneath the loading girder on a swing bridge. Operated mechanically, it receives the pivot-pier live loads and transmits them directly to the substructure, thus relieving the pivot casting from all (or nearly all) live-load stress

CH clay, high plasticity

channel profile the longitudinal section of a channel

chase a channel, groove, or elongated recess built into a structure surface to receive a part of a joint or structure

check analysis *see* **ladle analysis**

chord the upper (top) and lower (bottom) longitudinal members of a truss that extend the full length and carry the tensile and compressive forces. The chords may be parallel (the upper one may be polygonal or curved [arched] and the lower one horizontal) or both may be polygonal [broken chords]). The panel points of polygonal top chords are parabolic chords (they follow the arc of a parabola)

chord members the trusses that are commonly divided lengthwise into panels, the length of each being termed a panel length. The corresponding members of the chords are described as upper (top) chord members and lower (bottom) chord members

circular arch an arch in which the intrados surface is a portion of the surface of a right circular cylinder

CL clay, low plasticity

clearance the unobstructed space provided on or under a bridge superstructure for the free passage of vehicular and pedestrian traffic, a river or stream with its surface burden of floating debris, or a navigation craft. Clearance is also provided for the free assembly and adjustment of the elements or members of a structure and for the variations in dimension due to workmanship, temperature changes, and minor irregularities. Clearance is sometimes described as *go-and-come* or *play allowance*. *See also* **clear headway**

clear headway the vertical clearance beneath a bridge structure for navigation. In tidal waters, headway is measured above mean high-tide elevation. *See also* **clearance**

clear span the unobstructed space or distance between the substructure elements measured between faces of abutments and/or piers. When a structure is located on a navigable waterway, the clear span is measured at mean low-water elevation and may be the distance between guard or fender piers, dolphins, or other constructions to protect navigation

clevis a forked device used to pin the end of a rod on a gusset plate or other structural part. The clevis may be adjustable or fixed. An adjustable member with a fixed clevis at one end may be fitted with a thread and nut at its opposite end, while one having fixed clevises at each end may be fitted with either a sleeve nut or a turnbuckle in its midlength portion. Lateral bracing and tie-rod diagonals on steel trusses often use clevises

clevis bar a member consisting of a rod having upset threaded ends fitted with clevises for engaging end-connection pins. For later adjustment, it has right- and left-hand end threads or it has a sleeve nut or a turnbuckle within its length with right- and left-hand end threads on each of its sections and its clevises forged integrally with the body sections of the bar

clip angle *see* **connection angle**

closed-spandrel arch an arch bridge with earth filling the space between the deck and the bottom of the arch

coarse aggregate *see* **aggregate**

coefficient of thermal expansion the unit strain produced in a material by a change of one degree in temperature

cofferdam an open, box-like structure constructed to surround the area to be occupied and to permit draining of the enclosure so that excavation may be effected in open air. In its simplest form, the dam consists of interlocking steel sheet piles

cold work the rolling or bending of material at ordinary room temperature or of steel under concentrated forces

collision strut a redundant member reinforcing the inclined end post of a through truss against damage from vehicular traffic. The strut joins the end post at a height above the roadway perceived to be the location of collision contact and connects the post with the first interior bottom-chord panel point. The use of collision struts in highway bridges is limited

column a member resisting compressive stresses, vertical to the bottom chord of a truss and common to two truss panels

composite bridge a bridge with a concrete deck that has longitudinal main load-bearing members

composite joint a joint in which combined mechanical devices or such devices combined with a fusion weld develop its strength, rigidity, and so forth. Using joints is undesirable due to the uncertain functioning of composite joints

compound roller a large, hollow roller holding a large, solid cylinder surrounded by smaller solid rollers with circular spacing bars engaging their ends. The roller is commonly hollow at the center to permit observation of its interior material

compression the stress that occurrs when force is applied at the ends of a member. The stress is inward toward the center of the member

concrete a composite material consisting of a binding medium (such as cement and water) within which are embedded particles or fragments of aggregate (a relatively inert mineral filler)

concrete box girder a large, reinforced or prestressed concrete, box-shaped beam, usually multicelled with several interior webs. The bottom slab of the girder serves as a flange only, while the top slab is both a flange and a transverse deck slab

connection angle a piece or pieces of material shaped in an angle serving to connect two elements of a member or two members of a structure

consolidated soil foundation a foundation of soft soil made more resistant to its loads by consolidating natural material, adding material such as sand and gravel into the soft material, and injecting cementing materials into the soil mass that will produce consolidation by lapidification

consolidation the time-dependent change in the volume of a soil mass under compressive load that occurs when water slowly escapes from the pores or voids of the soil. The soil skeleton is unable to support the load and changes structure, thereby reducing its volume and producing vertical settlements

continuous girder any girder, span, or truss that extends without interruption over one or more intermediate supports

continuous span *see* **continuous girder**

continuous truss *see* **continuous girder**

continuous weld a weld that extends the entire length of a joint

coping the top stone layer of a retaining wall, pier, abutment, wing wall, and so forth that projects beyond the surface of the masonry below. The top surface is usually battered (washed) to prevent the accumulation of rain or other moisture

corbel a projecting part of a structure that supports a brace, a short beam, or another member or that serves as part of the architectural treatment of the structure. In stone and brick masonry construction, this form of corbel is called a *corbel course,* implying greater length than that of a simple corbel

corbel course *see* **corbel**

corrosion the general disintegration and wasting of surface material through oxidation, temperature, decomposition, and other natural agents

cos cosine

cotter bolt a bolt with a head at one end and a round hole with a cotter pin or a hexagonal slot with a tapered wedge near the opposite end. Cotter bolts usually have one or two washers. A cotter bolt with a key is sometimes called a *key bolt*

counter a diagonal truss member located at the midspan panel of the truss. Counters function only when the span is partially loaded. The dead load of the truss does not stress the counter. *See also* **web members**

counterbalancing chain chains in a vertical-lift bridge that serve to counteract the varying weight of the supporting cables incidental to the span movements

counterfort a bracket-like wall that projects from another wall to resist tensile and bending stresses. Counterforts are integrally built with or otherwise securely attached to the side of and extend partially or completely to the top of the wall they reinforce. *See also* **buttress**

counterforted abutment an abutment that develops resistance to bending moment in the stem through counterforts. This permits the breast wall to be a horizontal beam or slab spanning between counterforts rather than a vertical cantilever slab

counterforted wall a retaining wall with projecting counterforts to provide strength and stability. *See also* **retaining wall**

counterweight a weight used to counterbalance the weight of a movable part such as a bascule leaf or a vertical-lift span

counterweight well an enclosed space beneath the approach end of a bridge floor that accommodates the counterweight and its supporting frame during span movement on certain types of bascule-bridge structures

course a layer made of either cut or uncut pieces of stone with horizontal or slightly longitudinally inclined joints in stone masonry; a layer of bricks in mortar (in brick masonry)

cover the clear thickness of concrete between a reinforcing bar and the concrete surface

covered bridge a wooden bridge with an adaptable truss. To prevent or delay deterioration of the timbers caused by moisture in the joints, a housing of fastened materials covers the structure or its trusses. A covered bridge may be a deck or a through structure that may use pony trusses

cover plate a plate used with flange angles or other shapes to provide an additional flange section on a girder, column, strut, or similar member

cracking visible cracks in an overlay indicating cracks in the concrete below

cradle the lateral distance from the midpoint of one of the main cables to a straight line drawn between its support points on the towers

creep an inelastic deformation that increases with time while the stress is constant

crib a structure with compartments or coffers full or partly full of satisfactory material for supporting the structure. It may also serve as a training wall averting changes in shore and bank locations. The exterior portion may be planked or sheet-piled to protect the crib against erosion or floating debris. *See also* **dike**

crimped stiffener a stiffener forged at its ends to fit on the web and web legs of the flange angles of a plate girder

cross fall of roadway *see* **crown of roadway**

cross frames transverse bracings between two main longitudinal members. *See also* **bracing** *and* **diaphragm**

cross girder large timber, metal, and reinforced concrete girder members placed perpendicular to and connected on the main girders or trusses of a bridge span, including intermediate and end floor beams

cross wall	*see* **diaphragm wall**
crown of roadway	the crest line of the convexed surface or the vertical dimension measuring the convexed or raised surface from gutter to crest
C-shaped beams	steel channels
cu ft	cubic foot; cubic feet
culvert	a small bridge entirely below the elevation of the roadway surface, with no integral parts. Structures less than 20 feet in span are culverts, even though they support traffic loads directly. Structures over 20 feet in span and parallel to the roadway are *bridges*
curb	a stone, concrete, or wooden barrier paralleling the side of the roadway. Curbs guide vehicles and safeguard bridge trusses, railings, and other structures outside the roadway. Curbs also protect pedestrians on sidewalks from colliding with vehicles
curb inlet	*see* **scupper**
curtain wall	a thin, nonbearing masonry wall; a thin, vertical, and integral part of a culvert paving slab that protects the culvert against undermining by stream scour; a wall uniting the pillar or shaft portions of a dumbbell pier and serving as a frame composed of struts and braces to make the entire structure act integrally
curve banking	*see* **superelevation**
curved wing wall	a wall forming either a convex or concave arc flaring from the alignment of the abutment breast wall
curves in plan and profile	a roadway may be curved in its lateral alignment, its vertical contour, or in both its alignment and contour
cut or cutting	that portion of construction produced by the removal of the natural formation of earth or rock, whether sloped or level. The terms *side-hill cut* and *through cut* describe the resulting cross sections commonly encountered
cut slope	the inclined surface of an approach cut ending with a ditch or gutter at its base, which in turn serves to remove accumulations of water from all areas drained into it
cylinder pier	*see* **pier**
CZ	combat zone
DA	Department of the Army
DC	District of Columbia
dead load	a static load due to the weight of the structure
deadman	an anchorage member engaging the end of a stay rod, cable, or other tie-like pieces. The deadman resists the stresses of tie members and restrains and holds structure members in position against horizontal movement
debris rack	a grill barrier used to intercept debris above a sewer or culvert inlet
deck	the part of a bridge that directly supports traffic. The deck distributes the load to beams and stringers and may be the main supporting element of a bridge. It may be reinforced concrete, timber, a steel plate or grating, or the top surface of abutting concrete members or units

deck bridge a bridge with its floor elevation at or above the elevation of the uppermost part of the superstructure

decking the flooring of bridges with wooden floors. Decking does not include floor stringers, floor beams, or flooring-support members

deformation dimensional changes that occur when stress in a material is less than the yield point. The material will return to its original shape if the stress is removed

deformed bars *see* **mechanical bond**

deg degree(s)

depth of truss the vertical distance between the centerlines of action of the top and bottom chords of trusses with parallel chords

design load the load of concentrations used to determine the stresses, stress distributions, and the cross-sectional areas and compositions of a bridge structure. The design's fixed load or loadings are often composite rather than actual, but are based on a study of vehicle types

diagonal *see* **web members**

diagonal stay a cable support extending diagonally from the tower to the roadway to add stiffness to the structure and to diminish the deformations and undulations caused by traffic in a suspension bridge

diam diameter

diaphragm a reinforcing plate or member that is placed within a member or deck system to distribute stresses and to improve strength and rigidity. *See also* **bracing** *and* **cross frames**

diaphragm wall the walls of a reinforced concrete caisson or box-like structure that divides its interior space into reinforcing compartments; a wall built transversely to the longitudinal centerline of a spandrel arch to tie together and reinforce the spandrel walls and to provide a support for the floor system. The diaphragms of an arch span may have manholes to allow inspection

dike a soil embankment constructed to prevent inundation by an adjacent area. A dike prevents stream erosion and localized scour and directs the current so that debris will not accumulate on bottomland adjacent to approach embankments or portions of the structure. This term is sometimes misapplied to crib construction. *See also* **crib**

dimension stones stones quarried with the dimensions large enough to provide cut stones with given finished dimensions (commonly called *quarry face* or *rock face)*

distribution girder a beam or girder-like member forming a part of the frame that transmits loads to the drum girder of a rim-bearing swing span

ditch *see* **drain**

diversion drain an open, top-paved drain for diverting and conveying water from a roadway gutter down the inclined surface of a bridge-approach embankment or causeway

diversion flume *see* **diversion drain**

dolphin a group of piles driven close together and placed to protect portions of a bridge exposed to possible damage by collision with river or marine traffic

double lattice *see* **lattice**

double-leaf bascule bridge a bridge that has spans with two bascule leaves

double-movable bridge a bridge in which the arms of two adjacent swing spans or the leaves of two adjacent bascule spans are joined at or near the center of the navigable channel to produce the clear span for navigation

dowel a short, round or square length of metal used to attach and prevent movement and displacement of wooden, stone, concrete, or metal pieces when placed in a hole in their contact surfaces. Dowels generally resist shear forces, but footing dowels in reinforced concrete walls and columns resist bending forces. *See also* **drift bolt**

drain a trench or trough-like excavation made to collect water. A drain collects and conveys water (a ditch may only serve to collect water). A gutter is a paved drain commonly built in conjunction with the curbs of the roadway or closely adjacent to the paved portion of the roadway

drainage a construction or appliance that intercepts and removes water

drainage area the place where the run-off water goes when passing beneath a bridge or passing a specific location in a river or stream

drain hole an open hole or embedded pipe that provides an exit for water or other liquid matter that might otherwise accumulate. In areas exposed to freezing temperatures, these holes prevent damage from expansion caused by freezing

drawbridge a bridge over navigable water with a movable superstructure span of any type that frees the channel from obstructing navigation

draw rest a block of masonry, a rigid metal frame, or another support on a fender or guard pier that is equipped with a latch block for holding open a swing span

draw span a swing or a retractile superstructure span of a bridge over a navigable stream, river, lake, canal, tidal inlet, gut, or strait. *See also* **movable bridge**

dressed rubble *see* **rubble**

drift bolt similar to a dowel, except drift bolts are commonly driven in holes having a diameter slightly less than the bolts. The difference is more a matter of term usage rather than of functions to be performed. *See also* **dowel**

drip bead a channel or groove in the bottom of an exposed part of a masonry structure that stops rainwater and keeps it from dripping on surfaces below the projection

drip hole *see* **drain hole**

drop inlet a box-like construction built integrally with the upstream end of a culvert, which may include a grating. The inlet allows water to flow in at its top and to center the culvert within its bottom portion. If the base is constructed to form a sump below the inlet elevation of the culvert, the inlet may retain material likely to become lodged in the culvert

drum girder the circular-plate girder forming a part of a swing-bridge turntable that transfers its loads to the rollers and the track on which they travel. When the swing span is closed, the drum-girder track receives the superstructure loads and transmits them to the substructure bearing area beneath the track

ductility the ability to withstand nonelastic deformation without rupture

dyke *see* **crib** *and* **dike**

efflorescence a white deposit on concrete or brick that is caused by crystallization of soluble salts brought to the surface by moisture in the masonry

el elevation

elastic *see* **deformation**

elastomer a natural or synthetic, rubber-like material

electrolytic corrosion corrosion resulting from galvanic action

element a piece of material forming a part of a structure

elliptic arch an arch (fitted to stone masonry arches) in which the intrados surface is half the surface of an elliptical cylinder. This terminology is sometimes incorrectly applied to a multicentered arch

end block the thickening of the web or an increase in the beam width at the end to provide adequate anchorage bearing for the posttension wires, rods, or strands on a prestressed concrete beam

end floor beam *see* **floor beam**

end hammer the hammering action of an end-lift device on its pedestal or bearing plate. End hammer occurs when the lifting device is improperly adjusted and traffic movements cause deflections and vibrations

end lift the mechanism of wedges, toggles, link-and-roller, rocker-and-eccentric, or other devices combined with shafts, gears, or other needed parts to remove the camber (droop) of a swing span

end post the end compression member of a truss, either vertical or inclined in position and extending from the top chord to the bottom chord. It serves to transmit all of the truss shear loading to the superstructure

engr engineer

epoxy a synthetic resin that cures or hardens by a chemical reaction between components that are mixed together shortly before use

eq equation(s)

equalizer a balance lever engaging the counterweight and the suspending cables of a vertical-lift span to adjust and equalize the stresses in the latter

equilibrium the condition in which the forces acting on a body produce no external effect or movement in statics

equivalent uniform load a load with a constant intensity per unit of its length. When used to determine the stresses in a structure, this load produces a very similar or equal effect to that of a live load with vehicle or wheel concentrations spaced at varying distances

expansion bearing a device or assemblage that transmits a reaction from one member or part of a structure to another. The expansion bearing overcomes sliding, rolling, or other friction conditions to permit longitudinal movement caused by temperature changes and superimposed loads without transmitting a horizontal force to the substructure

expansion dam the expansion joint or that part of the expansion joint that serves as an end form for placing concrete at a joint

expansion joint a joint designed to provide a means for expansion and contraction that is caused by temperature changes, loadings, and so forth

expansion pedestal *see* **expansion shoe**

expansion rocker an articulating assembly that forms part of the movable end of a girder or truss and facilitates longitudinal movements caused by temperature changes and superimposed loads

expansion roller a cylinder that is mounted so that when it revolves it facilitates movements caused by temperature changes, loadings, and so forth. *See also* **roller nest**

expansion shoe a member or assemblage that provides a means for expansion, contraction, or other longitudinal movement. Anchor bolts fix the masonry plate or casting in position, and the superimposed shoe plate or pedestal is free to move longitudinally on it or on intervening rollers but is restrained from transverse movement. A *shoe* permits movement by sliding. A *pedestal* secures a somewhat greater total depth and permits movement by sliding or rolling

extrados the curved surface of an arch that is farthest from its longitudinal axis or axes; the curve defining the exterior surface of an arch

eyebar a rectangular bar member that has enlarged forged ends or heads with holes through them for engaging connecting pins. An adjustable eyebar has two sections fitted with upset threading engaging a sleeve nut or a turnbuckle

eyebolt a bolt with a forged hole or loop at one end to allow anchorage of a cable, a hooked rod, other parts of the bridge, or unrelated equipment or structures. *See also* **hook bolt** *and* **ringbolt**

F Fahrenheit

face stones the stones exposed to view in the drop surfaces of abutments, piers, arches, retaining walls, or other stone structures

face wall the outermost spandrel walls providing the face surfaces of the completed structure. *See also* **breast wall** *and* **spandrel**

falsework a wooden or metal framework built to support the weight of a structure without appreciable settlement and deformation until it can stand alone. Falsework helps construction operations and provides for economical removal and salvaging of material

fanged anchor bolt *see* **ragged anchor bolt**

fascia a light, stringer-like outside member spanning longitudinally between cantilever brackets that support large overhangs on girder or beam bridges. A fascia is designed for effect rather than strength and rigidity, although it may involve both

fascia girder an exposed outer girder of a span that is sometimes treated to provide an attractive appearance

fatigue the tendency of a member to fail at a lower stress when subjected to cyclical loading rather than static loading

felloe guard *see* **wheel guard**

fender a structure that is placed upstream close to a pier or upstream and downstream from the center pier and end piers or abutments of a superstructure span to protect the superstructure or an open span from collision with floating debris, ice, or other waterborne traffic

field coat a coat of paint that is applied after the structure is assembled and its joints are completely bolted, riveted, or welded together. This is often part of the field erection procedure

fill material (usually earth) used to raise or change the surface contour of an area or to construct an embankment

filler a piece used in wooden and structural-steel construction to fill a space beneath elements such as a batten, splice plate, gusset, connection angle, or stiffener

filler metal metal prepared in wire, rod, electrode, or other adaptable forms to be fused with the structure metal in the formation of a weld

filler plate *see* **filler**

fillet a curved portion forming a junction of two surfaces that would otherwise intersect at an angle. A fillet is used to disseminate and relieve shrinkage or other stresses, to allow movement not otherwise possible, and to facilitate the placement and removal of concrete forms

fillet weld a weld that joins intersecting members by depositing weld metal to form a near-triangular or fillet-shaped junction of the member surfaces. This weld serves to unite the intersecting surfaces of two elements of a member

filling *see* **fill**

fine aggregate *see* **aggregate**

finger dam expansion joint in which the opening is spanned by meshing steel fingers or teeth

fish belly a term that is applied to a girder or truss with its bottom flange or chord haunched or bow-shaped with the convex side downward. *See also* **lenticular truss**

fixed bearing the plates, pedestals, or other devices that receive and transmit the reaction stresses of a beam, slab, girder, truss, arch, or other superstructure span to the substructure or to another supporting member or structure

fixed bridge a bridge with superstructure spans fixed in position. The construction may allow for expansion and contraction from temperature changes, loading, and so forth

fixed-end arch *see* **voussoir arch**

fixed span an immovable superstructure span anchored in its location on the substructure

flange the part of a rolled I-shaped beam or built-up girder extending transversely across the top and bottom edges of the web. Flanges carry the forces of internal resisting moment and may consist of angles, plates, or both

flange angle an angle used to form a flange element of a built-up girder, column, strut, and so forth

flare the lateral distance from the cable support on the tower to the anchorage

flared wing wall a wall that forms an angle with the alignment of the abutment breast wall by receding. It also deflects water and floating debris into the waterway of the bridge, which protects the approach embankment against erosion

floated face *see* **mortar**

floating bridge a bridge that is similar to a pontoon bridge except that its parts providing buoyancy and supporting power may be logs or squared timbers held in position under a plank floor with lashing pieces, chains, or ropes or made of hollow cellular construction

floating foundation a soil-supported raft or mat foundation with low bearing pressures. *See also* **foundation**

floodgate a gate installed in a culvert or bridge waterway to prevent the ingress of floodwater or tidewater to the area drained by the structure

floor *see* **deck**

floor beam a beam or girder transverse to the general alignment of the bridge with its ends framed on the columns of bents and towers or on the trusses or girders of superstructure spans. A floor beam at the extreme end of a girder or truss span is an *end floor beam*

floor system the complete framework of floor beams and stringers or other members supporting the bridge floor and traffic loading, including impact

flow line the surface of a watercourse

flux a material that dissolves and removes oxides from metal during the welding process and protects the weld from oxidation during the fusion process. Flux may be in the coating on a metal-stick electrode or a granular mass covering the arch in submerged arc welding

FM field manual

footbridge a bridge designed and constructed for pedestrian traffic

footer *see* **footing**

footing the enlarged or spread-out lower portion of a substructure that distributes the structure load to the earth or to supporting piles. Concrete slabs most often use footings, although stone piers also use footings or *plinth*

footing course *see* **footing**

footwall *see* **toe wal**l

forms the wood or metal construction used for receiving, molding, and sustaining a plastic mass of concrete (to the dimensions, outlines, and details of surfaces planned for) while it hardens. *Lagging* refers to the surface-shaping areas producing the intradoses of arches or other curved surfaces, especially when strips are used

formwork *see* **forms**

foundation the supporting material on which the substructure portion of a bridge is placed. A *natural* foundation consists of natural earth, rock, or near-rock material stable enough to support the superimposed loads without lateral displacement or compaction entailing appreciable settlement or deformation. The term foundation also applies somewhat to a substructure unit

foundation excavation the hole dug for a foundation

foundation grillage a construction of layered steel, timber, or concrete members. All layers are alike. The members in each layer are parallel, producing a crib or grid-like effect. Grillages usually hold heavy concentrated loads. *See also* **floating foundation** *and* **grillage**

foundation load the load imposed on a given foundation

foundation pile or piled a wood, metal, or reinforced concrete pile used to reinforce a foundation to support superimposed loads

foundation pit *see* **foundation excavation**

foundation raft *see* **floating foundation**

foundation seal a concrete mass placed underwater to close or seal a cofferdam against incoming water. *See also* **tremie**

foundation stone a coarse stone that touches the foundation of a structure

FP fixed point

fps feet per second; foot per second

frame a structure arranged and secured so that it will not be distorted by supporting loads and forces and physical pressures. Framing includes design and fabrication for the complete structure

framed bent *see* **bent**

framing *see* **frame**

friction pile a pile that receives its support through friction resistance along the lateral surface of the pile

friction roller a roller placed between members that reduces frictional resistance to translation movement to cause change in the relative positions of the members

front-load bearing	live-load bearings on the support pier of a bascule bridge
frost heave	the upward movement of and force exerted by soil due to alternate freezing and thawing of retained moisture
frost line	the depth to which soil may freeze
ft	foot; feet
full-height abutment	*see* **shoulder abutment**
galvanic action	the electrical current between two unlike metals
gauge	the distance between parallel lines (such as rails and rivet holes) or a measure of sheet metal or wire thickness
girder	a flexural member that is the main or primary support for the structure, which usually receives loads from floor beams and stringers. A girder can be any large beam, especially if built up
girder bridge	a bridge with two or more girders supporting a separate floor system of slab and floor beams and possibly stringers; a bridge using large, built-up steel beams, prestressed concrete beams, or concrete box girders
girder span	a span in which the major longitudinal supporting members are girders
go-and-come allowance	*see* **clearance**
gothic arch	an arch in which the intrados surface has two equal cylinder segments intersecting obtusely at the crown
GP	poorly graded gravels; a gravel-sand mixture with little or no fines
GPM	gallons per minute
grade crossing	an intersection of one railroad and one highway at a common grade or elevation; an intersection of two or more highways; an intersection of two railroads
grade intersection	the place where a horizontal and an inclined length of roadway or two inclined lengths meet in profile. The intersections are connected by a vertical curve to provide an easy transition from one to the other. The resulting profile is a sag or a summit, depending on whether it is concaved or convexed upward
grade separation	the use of a bridge structure and its approaches to confine portions of traffic to different elevations, thus dividing or separating the crossing movement. *See also* **overpass**
gradient	the rate at which the roadway or sidewalk surface inclines. It is commonly expressed as a percentage relation of horizontal to vertical dimensions
gravity abutment	a heavy abutment that resists the horizontal earth pressure with its own dead weight
gravity wall	a brick, stone, or concrete wall that is stable against sliding and rotation (overturning) on its foundation or on any horizontal plane by virtue of its shape and weight

grillage a frame that is rigidly connected and built into a masonry bridge seat, a skewback, or another substructure support to ensure satisfactory load distribution; a platform-like construction or assemblage used to ensure distribution of loads on unconsolidated soil material. *See also* **foundation grillage**

grout a mortar with enough water content to make it a free-flowing mass. Grout is used to fill the spaces between stones or fragments (spalls) in the backing part of stone masonry, to fix anchor bolts, or to fill cored spaces in castings, masonry, or other spaces where water may accumulate

GTA graphic training aid

guard fence *see* **railing**

guard pier a concrete or stone-masonry fender that protects the supporting center pier of the swing span from injury. The pier may or may not be equipped with a rest pier upon which the swing span in its open position may be latched

guard rail *see* **railing**

guide a member that holds a moving part in position and directs its movement

guide roller a fixed roller that serves as a friction roller and guide for a member

gusset a plate serving to connect or unite the elements of a member or the members of a structure and to hold them in correct alignment or position at a joint. A plate may function either as a gusset and splice plate or as a gusset and stay plate. *See also* **stay plate**

gutter *see* **drain**

gutter grating a perforated or barred cover that is placed on an inlet to a drain to prevent the entrance of debris

guy a cable, chain, rod, or rope that checks and controls movement or holds a structure or part in fixed alignment or position

GW well-graded gravels; a gravel-sand mixture with 5 percent or less of fines

hacked anchor bolt *see* **swedged anchor bolt**

hand-drawn bridge *see* **hand-operated span**

hand hole holes provided in cover plates of built-up box sections to permit access for maintenance and construction

hand-operated span a span that is operated manually by applying force on a capstan, winch, windlass, or wheel. Such swing spans are called a *hand-drawn bridge*, a *hand-swing bridge*, or a *lever-swing bridge*

handrail railing presenting a latticed, a barred, a balustered, or another open-web construction. *See also* **railing**

hand-swing bridge *see* **hand-operated span**

hanger a tension element or member that suspends or supports an attached member such as the floor system of a truss, arch, or suspension span. Suspension bridges use wire cable (termed *suspender). See also* **suspender**

haunch	a beam or column deepening, usually deepest at the support and vanishing at or toward the center. The curve of the lower flange or surface may be circular, elliptic, parabolic, straight, or stepped
H-beam	a rolled-steel bearing pile with an H-shaped cross section
head	a measure of water pressure expressed in terms of an equivalent weight or pressure exerted by a column of water. The height of the equivalent column of water is the head
headwater	the depth of water at the inlet end of a pipe, culvert, or bridge waterway. *See also* **tailwater**
headway	*see* **clear headway**
heat treatment	various operations (such as tempering, quenching, and annealing) that use heating and cooling to impart specific properties to metals
heel of span	the rotation end of a bascule span
heel stay	*see* **shear lock**
hem	hemlock
hemisperical bearing	a bearing that uses the ball-and-socket principle to allow revolution in any direction
hinged joint	a joint constructed to permit rotation
hip joint	the juncture of the inclined end post with the end top-chord member of a truss. In a swing span, the juncture of the inclined end post next to the span center with the combined top chord and the connecting tie member between the arms is an *interior* hip joint or hip of truss
hip of truss	*see* **hip joint**
hook bolt	a bolt with its head end bent at or nearly at a right angle to its body portion that acts as a clamp; a bolt with a forged hook at one end used like an eyebolt. *See also* **eyebolt**
hooked anchor bolt	an anchor bolt bent to form a hook-like anchorage
horizontal curve	a curve in the plan location defining the alignment
Howe truss	a parallel-chord truss in which the web system is composed of vertical (tension) rods at the panel points with an x-pattern of diagonals. Although Howe trusses are usually used in wooden bridges, metal bridges also use them, but to a limited extent because using metal in compression members is uneconomical
HP-shaped beams	bearing piles
HQ	headquarters
hydrolysis	a chemical process of decomposition in the presence of water elements
hydroplaning	loss of contact between a tire and a deck surface when the tire planes or glides on a film of water covering the deck
hydrostatic	of or relating to fluids at rest or the forces exerted by such fluids
ice guard	*see* **fender**
impact load	a load allowance or increment intended to provide for the dynamic effect of nonstatic loads

in	inch(es)
indeterminate bridge	a bridge in which forces in the members cannot be determined by static equations alone
indeterminate stress	a stress induced by incorporating a redundant member in a truss or by an additional reaction in a beam, making stress distributions indeterminate. In redundant beams or trusses, stress distribution depends on the relative stiffnesses or areas of the members
inelastic compression	compression beyond the yield point
inspection ladder	special devices or appliances that make a safe and efficient means for making inspections and tests. They are rigidly fixed on the structure to prevent displacement. However, some structures are adapted for movable platform devices. *See also* **catwalk**
integral abutment	a small abutment cast monolithically with the end diaphragm of the deck
intercepting ditch	a ditch constructed to prevent surface water from flowing in contact with the toe of an embankment or a causeway or down the slope of a cut
intergranular pressure	pressure between soil grains
intermittent weld	a noncontinuous weld composed of a series of short welds and intervening spaces with fixed length and spacing
intrados	the curve defining the interior surface of the arch
IPS	improved plow steel
ISBN	International Standard Book Number
jack stringer	the outermost stringer supporting the bridge floor in a panel or bay, commonly weaker than a main stringer
joint	the space between individual stones in stone masonry; the division or end of continuity in concrete; a point at which members of a truss or frame are connected
Jul	July
key bolt	*see* **cotter bolt**
keystone	a stone of the crown string course of an arch; the final stone placed, closing the arch; or symmetrically shaped, wedge-like stone in a head-ring course at the crown of the arch, extending beyond the extradosal and intradosal limits of the voussoirs of adjoining string courses
king post	the post member in a king-post truss or in the king-post portion of any other type of truss
king-post truss	a truss adapted to either wooden or metal bridges. The king-post truss has two triangular panels with a common vertical post and a beam or chord extending the full truss. It is the simplest truss
king rod	*see* **king post**
kip-feet	a unit of measure used to express moment equal to 1,000 pounds of force acting over a one-foot-long moment arm

kips a unit of weight (equal to 1,000 pounds) that is used to express deadweight loads

km kilometer(s)

knee brace a short member that engages two other members, which are joined to form a right angle or a near-right angle, at its ends. The brace strengthens the connecting joint and makes it more rigid

knee wall a return of the abutment back wall at its ends to enclose the bridge seat on three sides. The returned ends hide the bridge seat, beam ends, and bearings and may retain a portion of the bridge approach material

knuckle part of the anchorage of a main suspension member that permits the anchorage chain-free, longitudinal movement in changing direction and provides for elastic deformations caused by temperature changes and the pull of the suspension member

kpf kip(s) per foot

ksf kip(s) per square foot

ksi kip(s) per square inch

K-truss a truss with a web system in which the diagonal members intersect the vertical members at or near midheight (K-shaped)

L-abutment a cantilever abutment with the stem flush with the toe of the footing, forming an L in cross section

lacing *see* **lattice**

ladle analysis the analysis or test of a spoon sample of ferrous metals taken during each melt of the pouring (teeming) operation. It is the analysis of drillings taken from the finished material and a check determination of the results secured from the ingots made at the furnace

lagging *see* **forms**

lam laminated; lamination

laminated timber timber planks glued together to form a larger member. Laminated timber is used for frames, arches, beams, and columns

lapidification *see* **consolidated soil foundation**

lap joint a joint in which a splice is secured by fixing two elements or members in a position where they project on or overlap each other

latch the device provided at one or both ends of a swing span to hold it in its correct alignment when closed and in readiness for the end wedges or lifts

latch block *see* **latch**

latch lever a hand-operated lever attached by a rod, cable, or chain to the latching device of a movable span and used to engage and release the latch

lattice or latticing an assemblage of single or combined bars, channels, or angles fixed in inclined positions on two or more elements of a member to secure the elements in position and ensure their combined action. When the bars incline in opposite directions and connect at their intermediate length intersections, the assemblage becomes a *double lattice*

lattice truss a truss with inclined web members. It has two or more web systems composed entirely of diagonal members at any interval and crossing each other without reference to vertical members. Any vertical members act as web stiffeners and may connect vertical brace frames to the girders

lb pound(s)

lb/ft pound(s) per foot; pound(s) per feet

leaf the portion of a bascule bridge that forms part or all of the span

ledger course a layer in masonry or concrete construction with a projection beyond the plane of superimposed on its top bed

ledge rock *see* **bedrock**

LEE labor and equipment estimates

lenticular truss a truss in which the polygonal chords curve in opposite directions, while their ends meet at a common joint. This is very similar to a parabolic arc. In through spans, the floor system is suspended from the joints of the bottom chord and the end posts are vertical

lever-swing bridge *see* **hand-operated span**

lift span a superstructure span revolving or lifting vertically to allow obstruction-free navigation. *See also* **movable bridge**

lifting girder a girder or girder-like member engaging the trusses or girders of the attached vertical-lift span

link and roller an adjustable, hinged, strut-like link fitted with a roller at its bottom end. It is supported on a shoe plate or pedestal and operated by a thrust strut, which forces it into and withdraws it from a vertical position. When installed on the outer ends of the girders or trusses of a swing span, link and rollers lift the span enough to remove the camber or allow the span to droop and free the arms to act as simple spans. When the links are withdrawn to a fixed (inclined) position, the span can be opened

lintel bridge a bridge with one or a series of spans composed of slabs of stone or reinforced concrete, spanning the interval(s) between its substructure elements

lintel stone a stone used to support a wall over an opening

live load a dynamic load (such as traffic) that is applied to a structure suddenly or that is accompanied by vibration, oscillation, or other conditions that affects its intensity

live-load bearing a class of bearings or supports installed on movable swing and bascule spans. They are engaged when the bridge is in the closed position, taking the load off the trunnions and center pivot and preventing the outer end of the lift span from hammering on the rest pier under live load

loading girder girders of a center-bearing swing span located above the pivot pier. Loading girders concentrate the superimposed load on the pivot

LOC lines of communication

lock device any of various devices, including incidental levers, shafts, and gears, used to lock bascules, vertical lifts, or swing spans in position

locking mechanism *see* **lock device**

lower track *see* **roller track**

L-shaped beam a beam comprised of two legs that forms an L

m meter(s)

MANSCEN Maneuver Support Center

margin *see* **tolerance**

masonry stone, brick, or concrete structures (such as abutments, piers, retaining walls, and arches)

masonry plate a steel plate or plate-shaped member attached on a substructure part to support the rocker, shoe, or pedestal of a beam, girder, or truss span and to distribute the load to the masonry beneath

mattress a mat-like protective covering made of brush and poles (commonly willow) compacted by wire or other lashings and ties. Mattresses are placed on water beds, banks, or shores to prevent erosion and scour

max maximum

meander a slow-flowing stream's serpentine curvature in a floodplain

mechanical bond the bond resulting from surface irregularities from manufacturing operations. The difference in round-bar reinforcement between the force required to produce initial slip and the ultimate, producing failure. *Deformed bars* use this mechanical bond with the surface bond

member any individual piece of an assembled frame or structure

MGB medium-girder bridge

mi mile(s)

milled a careful grinding of an edge or surface in steel fabrication to ensure good bearing or fit

min minimum

MLC military load classification

mortar a mixture of cementing material with fine aggregate and water. Mortar is used to bed and bind quarried stones, bricks, or other solid materials together or to produce a plastic coating on such constructions. This coating is also termed *floated* or *surface face, mortar coat, mortar finish,* or *parapet*

mortar coat *see* **mortar**

mortar finish *see* **mortar**

MOS military occupational specialty

movable bridge any bridge with one or more spans that can be raised, turned, lifted, or slid from their normal position to allow passage of navigation. *See also* **draw span** *and* **lift span**

movable span a superstructure intended to be swung or lifted to provide an unobstructed waterway space for waterborne traffic

mph mile(s) per hour

MSR main supply route

mud sill a piece of timber or a unit of two or more timbers placed on a soil foundation to support a single column, a framed trestle bent, and so forth. A load distribution piece aligned with and placed directly beneath the sill piece of a framed bent is a *subsill*, although it may act as a mud sill

multicentered arch an arch in which the intrados surface is outlined by two or more arcs having different radii by intersecting tangentially and disposed symmetrically

N north

N/A not applicable

na neutral axis

NATO North Atlantic Treaty Organization

natural foundation *see* **foundation**

natural slope *see* **angle of repose**

NDS national design specification

neat line the general alignment or position of a face or another surface exclusive or regardless of projections

neat surface *see* **neat line**

No. number(s)

normal roadway cross section the usual cross section of a roadway along straight stretches of a road

nose a projection acting as a cutwater on the upstream end of a pier. *See also* **starling**

notched anchor bolt *see* **swedged anchor bolt**

notch effect stress concentration caused by an abrupt discontinuity or change in a section. It can markedly affect a member's fatigue strength

N-truss *see* **Pratt truss**

OCONUS outside continental United States

OH organic silt; organic silt clay of low plasticity

open-spandrel arch an arch with unfilled spandrel walls. The arch ring receives its superimposed loads through these walls and, if necessary, through interior spandrel walls, tie or transverse walls, or interior columns. An open-spandrel arch is a structure in which bays or panels with arches, lintel spans, or other construction supporting the deck replace the spandrel walls. In turn, a cross wall or columns resting on the arch ring support these bays or panels

open-spandrel, ribbed arch a structure in which two or more comparatively narrow arch rings function in the place of an arch barrel. Arch rib struts located at intervals along the length of the rings secure the ribs rigidly in position. The arch rings support a column-type, open-spandrel construction sustaining the floor system and its loads

operator's house the building containing the power plant, operating machinery, and devices required to open and close a bridge span. Also referred to as an operator's cabin

outer bearing those live-load bearings placed on swing-span and bascule-rest piers

overpass a separation of grades in which elevated traffic structures are overpasses and lowered ones are underpasses. *See also* **grade separation**

packing ring *see* **spreader**

paddle boards striped, paddle-shaped signs or boards placed on the roadside in front of a narrow bridge as a warning

panel the portion of a truss span located between adjacent web and chord-member intersection points and applied to intersections on the bottom chord. A truss panel divided into two equal or unequal parts by an intermediate web member (such as a subdiagonal or a hanger) forms *subpanels*

panel point the point where primary web and chord members of a truss intersect

para paragraph(s)

parabolic arch an arch in which the intrados's surface is a segment of a symmetrical parabolic surface (suited to concrete arches)

parabolic arched truss *see* **parabolic truss**

parabolic truss a polygonal truss with its top chord and end-post vertices similar to the arc of a parabola, its bottom chord straight, and its web system triangular or quadrangular

parapet a wall-like brick, stone, or reinforced concrete member on the retaining wall of an approach cut, embankment, or causeway or along the outer edge of the roadway or sidewalk of a bridge to protect vehicular and pedestrian traffic. Although similar to a balustrade, a parapet is usually a block barrier with no openings in the body portion. *See also* **mortar**

parent metal *see* **base metal**

Parker truss an adaptation of the Pratt truss in which the top chord is polygonal in shape. *See also* **Pratt truss**

PC personal computer

pedestal a cast or built-up metal member or assemblage that transmits loads from one part of a structure to another. A pedestal may also provide for longitudinal, transverse, or revolutional movements; block-like stone, concrete, or brick constructions on the bridge seat of an abutment or pier that provide support for the beams. *See also* **expansion shoe**

pedestrian bridge *see* **footbridge**

peen to draw, bend, or flatten by or as if by hammering with a peen

penetration the depth to which a pile tip is driven into the ground, surface wood is permeated by creosote oil, or the surface of structure metal is fused and coalesced with metal to produce a weld joint

perched abutment *see* **stub abutment**

pier a shaft or block-like structure that supports the ends of the spans of a multispan superstructure midway between its abutments. Several types apply to bridge construction. Some are classified by functional distinctions (anchor, pivot, and rest piers), and others are classified by shape (cylinder, pedestal, pile, and rigid-frame piers)

pier cap the top part of a pier. On rigid-frame piers, the pier cap is the beam across the column tops. On hammerhead and T-piers, the pier cap is a continuous beam. *See also* **cap** *and* **pile cap**

pilaster a column-like projection on a face surface used to relieve the blankness of a plane surface

pile a rod or shaft-like linear member driven into the earth. Piles carry structure loads through weak soil to that soil capable of supporting them and support loads where scour may cause loss of earth support

pile cap a concrete footing for a pier or an abutment supported on piles or the concrete below the pile tops when footing reinforcing steel is placed completely above the piles. *See also* **cap** *and* **pier cap**

pile cut-off the part of a pile that has been removed or will be removed from its driven butt end to secure the desired elevation

pile shoe a metal piece fixed on the point or penetration end of a pile to protect it during driving and to ease penetration of dense earth

pile splice a means of joining one pile on the end of another to provide greater penetration length

piling a number of piles used together to form a construction (such as a crib, cofferdam, or bulkhead)

pin a cylindrical bar used to connect, hold in position, and transmit the stresses of members in a truss or framed joint. To restrain the pin against longitudinal movement, the pin ends are fitted with pin nuts, cotter bolts, or both. The pin ends may also be burred or fitted with cotters to prevent the nut from dislodging or coming loose

pin-connected truss any truss in which pins connect the chord and web members at the truss joints

pin-filler *see* **spreader**

pinion the small driving gear on the power train of a movable bridge

pinion bracket the frame supporting the turning pinion with its shaft and bearings on a swing-span drum girder or loading girder

pin joint a joint in a truss or another frame in which the members are assembled on a cylindrical pin

pin packing an arrangement of truss members on a pin at a pinned joint

pin plate a metal sheet that is rigidly attached on the end of a member to secure a desired bearing, to develop and distribute the stress of the joint, and/or to secure additional strength and rigidity

pintle a small steel pin or stud that engages the rocker in an expansion bearing, permitting rotation, transferring shear, and preventing translation

pitch the longitudinal spacing between rivets, studs, bolts, holes, and so forth that are in a straight line

plate girder an I-shaped beam made of a solid plate web with flange plates or angles bolted, riveted, or welded on its edges. Additional cover plates may be attached to the flanges to provide greater flange area. *See also* **built-up column**

plate span *see* **girder span**

platform *see* **inspection ladder**

play allowance *see* **clearance**

PLC provisional load classification

plinth *see* **footing**

plug weld a weld that connects two overlapping members by placing weld material in a hole or slot drilled in one of the overlapping members

pointed arch *see* **gothic arch**

pointing the operations involved in compacting mortar in the outer part of a joint and in troweling or otherwise treating its exposed surface to secure watertightness, desired architectural effect, or both

polygonal truss any truss with an irregular (broken) straight top-chord alignment that forms with the end posts and with the bottom chord forming the perimeter of a polygon

pontoon a boat or another floating structure used as one of the supports for a temporary bridge

pontoon bridge a bridge with boats, scows, or pontoons fixed in position on the deck or floor to support vehicular and pedestrian traffic. A pontoon bridge may have a removable part to ease navigation. Modern floating bridges may have pontoons integrated with the deck. *See also* **portable bridge**

pony truss a truss not high enough to permit an effective top-chord system of lateral bracing above the bridge floor

pop-out conical fragment (about one inch in diameter) broken out of a concrete surface; shattered aggregate particles usually found at the bottom of a hole

portable bridge a bridge that may be readily erected for a temporary communication/transport service, then disassembled and reused. *See also* **pontoon bridge**

portal the clear, unobstructed entry of a through bridge; the chord bracing that fixes the top vertical clearance. The portal of a skew bridge is a *skew portal*

post *see* **column**

posted a limiting dimension indicating a bridge cannot safely take larger dimensions or loads or higher speeds

pot holes small, worn or disintegrated areas of a bridge floor or approach surface caused by vehicle wheels

Pratt truss a truss with parallel chords and a web system of vertical posts with diagonal ties inclined from the bottom-chord panel points toward the ends of the truss except for the counters required in midlength panels. *See also* **Parker truss**

prestressed bridge a bridge in which the main carrying members are prestressed concrete

priming coat the first coat of paint applied to the metal or other material of a bridge. For metal structures, it is often applied in the shop and is termed the *shop coat*

protection railing *see* **railing**

psi pound(s) per square inch

PSP pierced, steel plank

QSTAG Quadripartite Standardization Agreement

quarry face *see* **dimension stones**

queen-post truss a parallel-chord truss adapted to either timber or metal bridges. The queen-post truss has three panels. One of the chords occupies only the length of the center panel. Unless center-panel diagonals are provided, this is a *trussed beam*. *See also* **trussed beam**

rack a bar with teeth on one side to mesh with the gears of a pinion or worm. It is usually attached to the moving portion of a movable bridge

radial rod a radially located tie rod connecting the roller circle of a rim-bearing swing span with the center pivot or center-bearing casting

radial strut a radially located brace member of the drum construction of a rim-bearing wing span

ragged anchor bolt an anchor bolt cut with a chisel to produce fin-like projections that hold the bolt in place

railing a fence-like barrier or protection built within the roadway shoulder area to be a combined guide and guard for moving vehicular and pedestrian traffic and to prevent or hinder the accidental passage of such traffic beyond the berm line of the roadway

rake the slope, batter, or inclination of the sides of an embankment or other earth construction or of a masonry surface. *See also* **batter**

ramp an inclined traffic way leading from one elevation to another (such as an inclined, usually steep, approach to a bridge)

random stone a quarried stone block of any dimension

range of stress	the algebraic difference between the minimum and maximum stresses in a member or any of its parts produced by a given condition of loading or by its actual service loading
rebar	a steel reinforcing bar placed in concrete to improve its tensile properties
redundant member	a member of a truss or frame necessary only to reduce the stress carried by the determinate structure, which would be stable without it
reentrant corner	a corner with more than 180 degrees of open space
reflection	*see* **cracking**
reinforced concrete beam	a beam in which the metal reinforcement carries the tensile stresses. The concrete takes compression only, with some shear. It is commonly rectangular or T-shaped, with its depth dimension greater than its stem width
reinforced concrete cantilever wall	a wall with a base section integral with its stem constructed approximately at a right angle, giving its cross section an L- or an inverted T-shape. The stem portion resists the forces producing overturning by acting as a cantilever beam
reinforcing bar	a steel bar, with a plain or deformed surface, that bonds to the concrete and supplies tensile strength to it
retaining wall	a structure designed to restrain and hold back a mass of earth
retractile drawbridge	a bridge with a superstructure that can move horizontally (either longitudinally or diagonally) from a closed to an open position. The part acting in cantilever is counterweighted by that supported upon rollers
rigid-frame bridge	a bridge with rigid or moment-resistant connections between deck slabs or beams and the substructure walls or columns that produce an integral elastic structure. The structure may be steel or concrete
rim girder	*see* **drum girder**
rim plate	a toothed or plain segmental rim on a rolling-lift bridge
ringbolt	a ringbolt is an eyebolt fitted with a ring for added articulation; *See also* **eyebolt**
ring stone	*see* **voussoir**
riprap	protective covering material (such as blocks, brickbats, or stones) deposited on water beds, banks, and shores to prevent erosion and scour
rise of an arch	the vertical distance for a symmetrical arch (from the chord through its springing lines to the intrados at its crown). For an unsymmetrical arch, the rise is measured from the springing lines to the crown
riveted joint	a joint in which rivets or bolts unite the assembled elements and members. Proper distribution of rivets or bolts allows the joint to develop its various parts with relation to their stresses and purposes. Bolted and riveted joints employ different allowable unit stresses

roadway the portion of the deck surface of a bridge or of an approach embankment, causeway, or cut intended for vehicular and pedestrian traffic

roadway berm *see* **berm**

roadway shoulder that part of the top surface of an approach embankment, causeway, or cut immediately adjoining the roadway that accommodates stopped vehicles in emergencies and laterally supports base and surface courses

rocker and camshaft an adjustable mechanism consisting of a rocker bearing and a camshaft. Properly mounted and geared, the mechanism reacts on a fixed shoe plate or pedestal, rotating to produce a vertical lifting action

rocker bearing a cylindrical, sector-shaped member attached to the expansion end of a girder or truss. The rocker bearing has line-bearing contact with the masonry plate or pedestal. This wheel-like translation allows longitudinal movement caused by temperature changes and superimposed loads

rocker bent a metal, reinforced concrete, or timber bent that is hinged or joined at one or both ends to allow longitudinal movement caused by temperature changes and superimposed loads

rock face *see* **dimension stones**

roller a steel cylinder in a roller nest or any other rolling device or part; one of the wheel-like elements forming the roller circle of a rim-bearing swing span

roller bearing one or more rollers housed to permit movement of structural parts

roller nest a group of rollers (usually assembled in a frame or box) forming part of the movable end of a girder or truss and located between the masonry plate and shoe or pedestal. Roller nests ease longitudinal movement caused by temperature changes and superimposed loads

roller track the circular track on which the drum rollers of a rim-bearing swing span travel

rolling-lift bridge a bascule bridge that rolls backward and forward on supporting girders

RR railroad

rubble irregularly shaped pieces of stone obtained from a quarry. Rubble may vary from small, usable pieces to large boulders and fragments requiring mechanical equipment for handling. Stones that are ready to use in rubble masonry are *worked* or *dressed rubble*

run *see* **bead**

runoff the part of precipitation on a drainage (catchment) area that is discharged quickly and therefore affects the design of that area of the bridge. The amount of runoff depends on the soil type and conditions, the amounts of rainfall or snow, and so forth

saddle a member on the tower of a suspension bridge that supports the suspension cable or chain and allows horizontal movement caused by elastic deformations from temperature changes and service loads

safe load the maximum load that a structure can hold. The maximum load is determined by the magnitude and distribution of the wheel, the axle, and so forth and is based on the physical condition of the structure and its previous use

safety curb a narrow curb (between 9 and 24 inches wide) that serves as a refuge or walkway for pedestrians crossing a bridge

safety factor a factor that engineers use to allow for the failure stress or stresses assumed to exist in a structure or a member. It provides a margin of error in the strength, rigidity, deformation, and endurance of a structure or its component parts to compensate for irregularities in structural materials and workmanship, uncertainties involved in mathematical analysis and stress distribution, service deterioration, and other unevaluated conditions

sag a deformation of an entire span (or one of its members or parts) from its required position; the total deflection of the cable members of a suspension bridge

sag ratio the relation between the sag and the span length

sag rod a rod with threads and nuts at its ends that restrains a structure member from sagging due to its own weight or external forces

sash brace the horizontal member in a tier of bracing attached to a timber or a reinforced concrete or metal trestle bent or tower to add rigidity to the structure

sash stay *see* **sash brace**

SBC soil bearing capacity

SC clayey sands; sand-clay mixture

scab a plank that is spiked or bolted over the joint between two members to hold them in correct adjustment and to strengthen the joint

scour an erosion of a water-bed area that is caused by moving water; erosion that produces a deepening or widening of the water area

scow a flat-bottomed floating vessel with a rectangular hull, sloping ends, and no means of propulsion; commonly used as a support in a temporary bridge

screw jack and pedestal an adjustable mechanism consisting of a screw operated in a fixed nut and joined on the bottom with a pedestal-like bearing, permitting adjustment on a fixed-shoe plate or pedestal. Screw jacks and pedestals installed at each outermost end of the girders or trusses of a swing span lift them to allow the camber or droop to remove the swing span and free the arms to act as simple spans

scupper an opening in a bridge floor (commonly located next to the curb or wheel guard) to allow accumulated water to drain. On a reinforced concrete bridge, the scupper may be in the curb-face surface

scupper block one of the short, wooden pieces fixed between the planks of a bridge floor and the bottom side of the wheel guard to provide scuppers

seam weld a weld that joins the edges of two elements of a member or of two members placed in contact. This weld forms a continuous surface and prevents infiltration of moisture between the parts. This weld is not a stress-carrying weld

seat angle a steel section that is attached to the side of a column girder or another member to provide support for a connecting member either temporarily during its erection or permanently

segmental arch an arch in which the intrados surface is less than half the surface of a cylinder or cylindroid. Any right section that shows a parabolic curvature may include a segmental arch

segmental girder a girder that uses a curved bottom flange and tread coatings to join the bridge span with the track girder on a movable bridge. *See also* **track girder**

segmental rim the curved rim or circular segment of a rolling lift bridge

segmental roller a roller with two circular segments that are integrally joined by a web-like portion

seizing a wrapping of wire or other material that is applied on suspension-bridge cables to hold the individual wires in satisfactory contact condition

semistub abutment a cantilever abutment that is found part way up the slope between a shoulder abutment and a stub abutment and is intermediate in size

shafts pieces that are used in movable structures and that carry torsion stresses

shear lock the mechanism at the heel of a bascule span that engages and holds the leaves closed and prevents rotation

sheave a wheel with one or more grooves in its face surface

sheave hood a protective covering that is placed above a sheave to prevent accumulations of moisture, sleet, and ice on the sheave face

sheet girder a girder or girder-like member that supports the operating-cable sheaves at the top of a tower on a vertical-lift bridge

sheet pile a timber, reinforced concrete, or rolled-steel pile used in bulkheads, cofferdams, and cribs to retain the earth and to prevent the inflow of water, liquid mud, and sand

sheet pile cofferdam a wall-like, watertight barrier of driven timber or metal sheet piling. This dam is adapted to construction in still or slow-flowing, shallow water. Depositing earth material against the exterior side will sometimes makes the dam more watertight

sheet piling a number of sheet piles placed together to form a crib, cofferdam, bulkhead, and so forth

shelf angle *see* **seat angle**

shim a comparatively thin piece of wood, stone, or metal that is inserted between two elements, pieces, or members to fix their relative position and/or to transmit bearing stress

shoe a pedestal-shaped member at the end of a plate girder or truss that transmits and distributes its loads to a supporting area or member. A shoe may be a cast or a built-up member. *See also* **expansion shoe**

shoe plate the base plate or plate-like part of a shoe that may take bearing directly on a masonry plate or an intervening expansion device

shop coat *see* **priming coat**

shore a strut or prop that is placed in a horizontal, inclined, or vertical position against or beneath a structure or a part of the structure to restrain movement

shoulder abutment a cantilever abutment that extends from the grade line of the road below to that of the road overhead. It is usually set just off the shoulder

shoulder area *see* **roadway shoulder**

shuttering *see* **forms**

side-hill cut *see* **cut**

sidewalk the part of the bridge floor serving pedestrian traffic only and commonly elevated above the vehicle area for the safety and convenience of its users

sidewalk bracket a triangular frame or cantilever beam attached to and projecting from the outside of a girder, truss, or bent to serve as a support for the sidewalk stringers, floor, and railing or parapet

sill the base piece or member of a viaduct or trestle bent that distributes column loads directly on the foundation or on mud sills embedded in the foundation soil transversely to the alignment of the bent

sill piece *see* **sill**

silt very fine siliceous or other hard and durable material derived from its mother rock through attrition or other mechanical action rather than chemical decomposition

simple span a superstructure span with a single unrestrained bearing or support at each end. This span is unaffected by stress transmission to or from an adjacent span or structure

sin sine

skew *see* **skew angle**

skew angle the acute angle subtended by a line that is normal to the longitudinal axis of the structure and a line that is parallel to or coinciding with the alignment of its end as applied to oblique bridges

skewback the course of stones in an abutment or pier that is located at the extremity of an arch and has inclined or battered beds as required to transmit the stresses of the arch; a casting or combination of castings or a built-up member designed to function as a skewback

skewback pedestal *see* **skewback shoe**

skewback shoe the hinged shoe or pedestal member that transmits the thrust of a trussed arch or plate-girder arch to an abutment or pier skewback or cushion course

skew portal *see* **portal**

slab a thick plate (usually of reinforced concrete) that supports loads by flexure and is usually treated as a widened beam

slab bridge a bridge with a superstructure that is composed of a reinforced concrete slab that is either singular, constructed in place, or a series of narrow, precast slabs. This slab is parallel with the roadway alignment and spans the space between the supporting abutments or other substructure parts

slag inclusion small particles of metal that are trapped inside a weld during the fusion process

sleeve nut a device used to connect the elements of an adjustable rod or bar member. The sleeve nut is a forging with an elongated, nut-shaped body that has right- and left-hand threads in its end portions, permitting wrench adjustments or desired member tension

slenderness ratio the measure of a member's stiffness, which is expressed as the length of the member divided by its radius of gyration

slice plate *see* **gusset**

slope the inclined surface of an excavated cut or an embankment

slope pavement a thin surfacing of material deposited on the sloped surface of an approach cut, embankment, or causeway to prevent its disintegration by rain, wind, or other erosive action

slope protection *see* **slope pavement**

slot weld *see* **plug weld**

SM silty sands; a sand-silt mixture

soffit *see* **intrados**

soldier beam a steel pile that is driven into the earth (with its butt end projecting) and used as a cantilever beam to support a plank-style retaining wall

sole plate a plate that is bolted, riveted, or welded on the bottom flange of a rolled beam, plate girder, or truss to take direct bearing on a roller nest, bearing pedestal, or masonry plate. The plate distributes the reaction of the bearing to the beam, girder, or truss member and may act as a combined sole and masonry plate at the fixed end of a beam, a girder, or a truss

SP poorly graded sands; a gravelly sand mixture with 5 percent or less of fines

spalls a circular or oval depression in concrete that is caused by a separation of the surface concrete, revealing a fracture that is parallel with or slightly inclined to the surface; pieces of spalled concrete

span the distance (center to center) of the end bearings or the distance between the lines of action of the reactions; the unobstructed space or distance between the faces of the substructure elements; the complete superstructure of a single-span bridge or a corresponding integral part or unit of a multiple-span structure

spandrel the space bounded by the arch extrados, substructure abutments and/or piers, and the roadway surface or another fixed-elevation limit

spandrel-arch structure *see* **face wall**

spandrel column a column that is superimposed on the ring or a rib of an arch span and serving as a support for the deck construction of an open-spandrel arch

spandrel fill the filling material placed in the spandrel space of an arch

spandrel tie wall one of the walls built at intervals above the arch ring to tie together and reinforce the spandrel walls; any wall serving as a restraining member to prevent bulging and distortion of two other connected walls. *See also* **diaphragm wall**

spandrel wall a wall that is built on an arch as a retaining wall for the spandrel fill and the roadway in a spandrel-filled arch or to support the floor system and its loads when the spandrel is not filled. Wide structures with unfilled spandrels may have one or more interior walls to provide a cellular construction when combined with tie walls

specifications a detailed construction plan, including material quality and handling, load conditions and application, stress, design, and construction procedures

spider the collar-like plate that connects a spider frame to a pivot

spider frame the assemblage of struts, radial rods, spacer rings, and roller-adjusting devices holding the conical roller ring of a rim-bearing or a combined rim- and center-bearing swing span to the pivot

spider rod *see* **radial rod**

spill-through abutment two or more columns supporting A-grade beams. This abutment retains the approach embankment only partly, since the embankment's sloped front and side portions extend with their normal slope to envelop the columns

splay saddle a member at the anchorage ends of suspension-bridge cables that permits the wires or strands to spread for connection to the anchorage

splice the joining or uniting of elements or members of a structure to provide the desired conditions for transmitting stress and developing rigidity and strength to fulfill service requirements in design. All the parts used to unite elements of a member or members of a structure

splice joint a joint in which the elements of a member or the members of a structure are joined by a splice plate or by a piece securing a required amount of strength and stability

spreader a cast or fabricated piece used to hold angles, beams, channels, or fabricated parts in place to function as parts of a member or structure; a ring-like or sleeve-like piece placed on a pin to hold eyebars or other members in the correct position

springing line the line in the face surface of an abutment or pier at which the intrados of an arch originates

spur dike a projecting construction that is placed downstream and/or upstream and adjacent to a U- or T-shaped, blocked, or arched abutment to secure a gradual contraction of the stream's width and to induce a free, even flow of water adjacent to and beneath a bridge. Spur dikes may be constructed as an extension of the wing wall or as a winged abutment

sq ft square feet; square foot

sq in square inch(es)

S-shaped beam the American-standard beam

sta station

STANAG Standardization Agreement

starling an extension at the upstream end or at both ends of a pier that is built with battered surfaces, forming a cutwater to divide and deflect waters and floating debris. When on the downstream end, the starling functions to reduce crosscurrents and swirl and eddy actions that produce sand, silt, and debris deposits

statics the branch of physical science concerned with bodies, static or at rest, upon which balanced forces act

stay-in-place forms a prefabricated, metal, concrete-deck form that will remain in place after the concrete has set

stay plate a plate that is placed at or near the end of a latticed side or the web of a compression or another member and at intermediate locations where connections interrupt the continuity of the latticing. This plate serves to distribute lattice-bar stress to the elements of the member and adds stiffness and rigidity to joint assemblages. *See also* **batten plate** *and* **gusset**

steel box girder a steel beam or girder with a rectangular or trapezoidal cross section that is made of plates and angles or other structural shapes that are bolted, riveted, or welded together (a girder's only interior construction is stiffeners, diaphragms, or other secondary bracing parts). Steel box girders are large, steel, multicell boxes with interior webs and composite in which the concrete slab forms the top side of the box

stem the vertical wall of an abutment retaining wall or solid pier. *See also* **breast wall**

stiffener an angle, a T, a plate, or another rolled section that is riveted, bolted, or welded on the web of a plate girder or another built-up member to transfer stress and prevent buckling or other deformation

stiffening girder a girder or truss incorporated in a suspension bridge to act with a suspension cable or chain by restraining the deformations of the cable or chain and by distributing the irregularly distributed loads, thus resisting and controlling vertical oscillations of the floor system

stiffening truss *see* **stiffening girder**

stirrup a U-shaped rod, bar, or angle piece that is placed in concrete beams, slabs, and so forth to resist diagonal tension stresses

stirrup bolt a U-shaped rod or bar (that is fitted at its ends with threads, nuts, and washers) that is used to support streamer or other timber pieces of wooden truss structures that are suspended from the bottom chord

stone facing a stone or brick surface covering or sheath laid to imitate stone or brick masonry with a depth thickness equal to the width dimension of one stone or brick for stretchers and equal to the length dimension for headers

stone veneer *see* **stone facing**

straight abutment an abutment that has the stem and wings in the same plane or that has the stem included within a length of the retaining wall. In general, the stem wall is straight but will conform to the alignment of the retaining wall

straight wing wall a wall in continuation of the breast wall of the abutment

strain the distortion of a body caused by one or more external forces and measured in units of length. In common use, strain is the proportional relation of the amount of distortion divided by the original length

stream flow the water discharge that occurs in a natural channel. A more general term than runoff, stream flow may be applied to discharge whether or not it is affected by diversion or regulation

stress resistance of a body to strain when in a solid or plastic state and which acts in an unconfined condition

stress sheet a drawing that shows a structure in skeletal form and clarifies the general makeup, major dimensions, and the arrangement and composition of its integral parts. The drawing should show computed stresses (based on applying a system of loads) and the design composition of individual members (based on applying assumed unit stresses)

stringer a longitudinal beam supporting the bridge deck and, in large or truss bridges, it is framed in or is on the floor beams

structural members ties, beams, columns or struts, or any combination of the three

structural shapes rolled iron and steel with various cross-sectional shapes adapted to the construction of metal members

structural T a T-shaped, rolled member that is formed by cutting a wide flange longitudinally along the centerline of the web

structure metal *see* **base metal**

strut a piece or member acting to resist compressive stress

strut sash *see* **sash brace**

stub abutment an abutment that is in the top portion of the end of an embankment or slope and is quite short as a result. Often supported on piles driven through the underlying embankment or *in situ* material, stubs may be founded on gravel fill, the embankment, or natural ground

subpanel *see* **panel**

subpunched and reamed work structural steel shapes or assembled members or structures with rivet holes that are punched a specified dimension less in diameter than the nominal size of the rivets to be driven in and subsequently reamed to a specified diameter greater than the rivet size

subsill *see* **mud sill**

substructure the part of a bridge superstructure that is constructed to support a span or spans

sump a pit or tank-like depression or receptacle into which water is drained. The water may then be pumped or siphoned for removal

superelevation the transverse inclination of a roadway's surface in a horizontal curve and the relatively short, adjacent tangent lengths required for full development. Superelevation allows resistance to the centrifugal forces of moving vehicles

superstructure the part of a bridge structure that primarily receives and supports highway, canal, railway, or other traffic loads and transfers the resulting reactions to the bridge substructure

surcharge an additional load placed atop existing earth or dead loads. With abutments and retaining walls, the surcharge is replaced by an earth load of equivalent weight

surface face *see* **mortar**

suspended span a superstructure span with one or both ends supported on or from adjoining cantilever arms, brackets, or towers. This span is unaffected by stress transmission to or from an adjacent structure

suspender a cable, a rod, or a bar that engages a cable band or another device, connecting it to the main suspension member of a suspension bridge at one end and a member of the bridge floor system at the other. The suspender transfers loads to the main suspension members of the structure, helping to support the floor system and its loads. A suspender is a member that supports another member in a horizontal or an inclined position against sagging, twisting, or other deformation due to its own weight. *See also* **hanger**

suspension bridge a bridge in which the floor system and its incidental parts and appliances are suspended on cables supported at two or more locations on towers and anchored at their extreme ends. These cables (which are the main suspension members) support the floor system horizontally

suspension cable one of the main members supporting the floor system of a suspension bridge. The cable ends may be fixed at the tops of backstay towers that resist the horizontal components of the cable or chain stresses, or the cable may rest on saddles at the tops of two or more towers and be extended and fixed on anchorage members

suspension chain *see* **suspension cable**

SW well-graded sands; a gravelly sand mixture with 5 percent or less of fines

sway anchorage a guy, stay cable, or chain that is attached at an intermediate location on the floor system of a suspension bridge and anchored on the end portion of an abutment or pier or in the adjacent land surface to increase the resistance of the suspension span to lateral movement

sway brace a component attached at an angle to the vertical components of a pile or bent, connecting it with the ground surface or sill for support. *See also* **bracing**

sway cable *see* **sway anchorage**

sway frame a sway bracing panel or frame. *See also* **bracing**

swedged anchor bolt an anchor bolt with traverse and diagonal niches to hold it in place

swing bridge a bridge with a superstructure that revolves in a horizontal plane on a pivot from a closed to open position. Its alignment is very similar to the original alignment. A swing bridge is a structure, with its substructure skewed, that commonly allows revolution in only one direction through an arc less than 90 degrees

swing span a superstructure supported on a pier at its center, with its end supports withdrawn or released. This span is equipped to be revolved in a horizontal plane to provide an unobstructed waterway for navigation. *See also* **movable bridge**

swing-span pivot the center casting that the movable portion of a swing span revolves on or about in making a cycle. In a center-bearing span, this casting acts both as a pivotal member and as the support for the movable span when the end-lift device is released. In a rim-bearing span, the swing span acts as a pivotal member but does not support the movable span. In a combined center- and rim-bearing span, the swing span acts as a support for a portion of the weight of the movable span when the end-lift device is released

T tracked

tack weld a butt, fillet, or seam weld intended only to fix an element or member of a structure in correct adjustment and position before full welding. Tack welds may restrain welded parts against deformation and distortion caused by expansion of the metal

tail lock *see* **shear lock**

tail pit *see* **counterweight well**

tailwater water that is ponded below the outlet of a culvert, pipe, or waterway to reduce the amount of waterway flow. Tailwater is expressed in terms of its depth. *See also* **headwater**

tan tangent

TCMS Theater Construction Management System

telltale a traffic-control device used to show the driver if the vehicle exceeds horizontal-clearance restrictions for a bridge

temporary bridge a structure built for emergency or interim use to replace a previously existing bridge that is demolished or unserviceable due to flood, fire, wind, and so forth or to supply bridge service required for a relatively short period

tendon a prestressing cable or strand

tension an axial force or stress caused by equal and opposite forces pulling at the ends of the members

threaded anchor bolt an anchor bolt that is shaped with a machine-cut thread. The thread anchorage uses a nut or a nut and anchor plate when the bolt is to be built into the masonry instead of being set in a drilled hole

three-hinged arch an arch with end supports pinned and a third hinge (pin) located somewhere near midspan, making the structure determinate

throat the dimension normal to the sloping face of a fillet weld between its heel and the sloping faces

through bridge a bridge with its floor located between the two sides of the superstructure, causing traffic to pass through the structural members

through cut *see* **cut**

tide gate *see* **floodgate**

tie bar *see* **tie rod**

tie plate *see* **stay plate**

tie rod a rod or bar in a truss or other frame that transmits tensile stress

tie wall *see* **spandrel tie wall**

TM technical manual

TO theater of operation

toe of a slope the place where the sloped surface of an approach cut, an embankment, a causeway, or another area intersects with natural or artificial ground surface at a lower elevation

toe wall a low retaining wall placed near the toe of a slope to produce a fixed end point, to protect against erosion and scour, or to prevent water-debris accumulation

toggle joint a mechanical arrangement where two members are hinged together at a central location and separately at their opposite ends. Their alignment forms an obtuse angle, causing a force applied at the common hinge to produce a lateral thrust at the end hinges directed by the original force

tolerance a range or variation in physical or chemical properties that is determined to be permissible for construction materials

top *see* **pier cap**

TOP land-force tactical doctrine and operational procedures

tower a pier or frame that supports the cables or chains of a suspension bridge at the end of a span; a frame acting as an end support, guide frame, and counterweight support for a vertical lift span during an operating cycle; a three-dimensional substructure framework in a viaduct with the vertical bents at its ends joined longitudinally by struts and braces, enabling the structure to resist forces acting longitudinally on the structure; a four-sided frame supporting the ends of two spans or one complete span (tower span) and the ends of two adjacent spans of a viaduct, with its column members strutted and braced in the tiers and the planes of two or four sides battered

track girder one of the plate girders or trusses that is intended to provide support for the movable span throughout a cycle. The tread casting fitted on its top flange or chord forms the track on which the segmental girder moves. *See also* **segmental girder**

track plate the plate on which the segmental girder of a rolling lift span rolls

track segment one of the pieces of the circular track that supports the balance wheels of a center-bearing swing span or the drum-bearing wheels of a drum or combined center- and drum-bearing spans

TRADOC Training and Doctrine Command

trailing wheel *see* **balance wheel**

transition length the tangent length within which the change from a normal to a superelevated roadway cross section is developed

transverse bracing the bracing assemblage engaging the columns of trestle and viaduct bents and towers in perpendicular or slightly inclined planes and in the horizontal planes of their sash braces. This bracing resists the transverse forces of wind, lateral vibration, and traffic movements that produce lateral movement and deformation of the united columns. *See also* **bracing**

transverse girder *see* **cross girder**

transverse system *see* **transverse bracing**

trapezoidal abutment *see* **straight abutment**

travel way *see* **roadway**

traverse drawbridge *see* **retractile drawbridge**

tread plate the plates attached on the bottom flange of a drum girder, shaped to form a circular surface with a uniform bearing on the drum rollers. These plates transfer the live and dead loads of the superimposed structure to the rollers. The assemblage is sometimes termed the *upper track*

tremie a long trunk or pipe with a hopper at its upper end that is used to place concrete underwater. *See also* **foundation seal**

tremie concrete the concrete placed underwater by use of a tremie

trestle a bridge structure with beam, girder, or truss spans supported on bents, which may include two or more tiers. Trestle structures are designated by the material and characteristics of their principal members

triangular truss *see* **Warren truss**

trunnion in a bascule bridge, the assemblage of a pin fitted into a supporting bearing and forming a hinge or axle on which the movable span swings during its cycle

trunnion girder the girder supporting the trunnions on a bascule bridge

truss a jointed structure with an open, built web arranged so that the frame is divided into a series of triangular figures and its component straight members are primarily stressed only axially. The connecting pins are assumed to be frictionless

truss bridge a bridge with a truss for a superstructure. The ordinary single span rests on one support at each end (which may be abutments, piers, bents, or towers or any combination of these). The superstructure span includes the trusses, the flow system, and the bracing

trussed beam a beam that is reinforced by one or more rods on its tension side (attached at or near its ends) and passing beneath a support at the midlength of the span, producing in effect an inverted king-post truss. *See also* **queen-post truss**

trussed girder *see* **king-post truss**

truss panel *see* **panel**

tubular truss	a truss with chords and struts composed of pipes or cylindrical tubes
Tudor arch	a modification of the gothic arch produced by adding shorter radius cylinder segments at the haunches, thus making it a four-centered form or type. *See also* **gothic arch**
turnbuckle	a device used to connect the elements of adjustable rod and bar members
two-hinged arch	an arch with a pinned connection at each support
U-bolt	a round or square bar that is bent in the shape a U and fitted with threads and nuts at its ends
underpass	*see* **overpass**
unit stress	the stress per square inch (or another unit) of the surface or cross-sectional area
uplift	a negative reaction or force that lifts a beam, a truss, a pile, or other bridge elements
upper track	*see* **tread plate**
US	United States
USACE	United States Army Corps of Engineers
USAES	United States Army Engineer School
U-wing wall	a wall placed parallel to the alignment of the approach roadway
vertical curve	a curve in the profile location that defines the elevation
vertical hip	the vertically placed tension member engaging the hip joint of a truss and supporting the first panel floor beam in a through-truss span or the bottom chord only of a deck-truss span
vertical-lift bridge	a bridge with a superstructure that can be raised or lowered vertically by cables, chains, or other mechanical devices, with its ends seated on bridge-seat pedestals. *See also* **movable bridge**
viaduct	a bridge structure consisting of beam, girder, truss, or arch spans that are supported on abutments with towers and bents, piers, or any combination of these supporting parts. Though a viaduct generally seems to be higher than a trestle, this is not usually so. A viaduct may be exactly like a multispan bridge
Vierendeel truss	a rigid frame with an assemblage of rectangles and trapezoids but no diagonal members
voided unit	a precast concrete-deck unit with cylindrical voids to reduce dead load
voussoir	one of the truncated wedged stones composing a ring course in a stone arch. The facing or head voussoirs are placed at the ends of a ring course
voussoir arch	a hingeless arch with both supports fixed against rotation. Originally, built of voussoirs (wedge-shaped stone blocks), the hingeless arch may also be concrete
W	wheeled

wale a wooden or metal piece or assemblage placed inside and/or outside the wall of a cofferdam, crib, or similar structure, usually in a horizontal position to maintain shape and increase rigidity, stability, and strength. An assemblage of wale pieces is termed a *waling*

wale piece *see* **wale**

waling *see* **wale**

walk *see* **inspection ladder**

Warren truss a parallel-chord truss that is developed for metal bridge structures in which the web system is formed by a single triangle. It has no counters, but web members near the center of a span can be subjected to stress reversals. It may include verticals

water table the upper limit or elevation of groundwater that saturates a part of a soil mass

waterway the available unobstructed width for the passage of water beneath a bridge. In a multispan bridge, the available width is the total unobstructed waterway lengths of the spans. *See also* **clear span**

wearing course *see* **wearing surface**

wearing surface the surface of a roadway that is in direct contact with traffic and that resists the resulting abrading, crushing, or other disintegrating action

web the stem of a dumbbell or solid wall pier or the part of a beam located between and connected to the flanges or the chords. The web resists shear stresses

web members the intermediate members of a truss, generally extending from chord to chord but not including the end posts. Inclined web members are termed *diagonals*. *See also* **counter**

web plate the plate that forms the web element of a plate girder, built-up beam, or column

wedge and pedestals an adjustable lifting mechanism with a wedge operating between an upper and a lower bearing block or pedestal

wedge stroke the theoretical distance a wedge must move on its pedestal to lift the arm of a swing span a distance equal to the vertical camber of the arm, due to elastic deformation minus the portion assumed to be provided in the field erection

weep hole *see* **drain hole**

weep pipe *see* **drain hole**

weld the process of uniting portions of one or more pieces, the elements of a member, or the members of a structure in an intimate and permanent position or status; the joint produced by the welding process

welded bridge a structure in which the metal elements composing its members and their joints are welded

welded joint a joint in which the assembled elements and members are welded

welded structure *see* **welded bridge**

weld layer a single thickness of weld metal composed of beads (runs) placed in contact to form a pad weld or a portion of a weld made of superimposed beads

weld metal the filler metal added to the fused structure metal to produce (by coalescence and interdiffusion) a welded joint or a weld layer

weld penetration the depth beneath the original surface to which the structure metal is fused in a fusion weld. *See also* **penetration**

weld sequence the order required in making the welds of a built-up piece or the joints of a structure to avoid the residual stresses producing individual joint distortions and deformations of the structure or its members

wheel base the axle spacing or length of a vehicle. When applied to vehicles with wheel concentrations at the ends of the front and rear axles, the wheel base is the center-to-center length of the axles or the length from the front to the rear wheels

wheel concentration the load carried by and transmitted to the supporting structure by one wheel of a vehicle, a movable bridge, or other equipment or device. *See also* **axle load**

wheel guard a timber piece that is placed longitudinally along the side limit of the roadway to guide vehicle wheels and to safeguard trusses, railings, and other structures outside the roadway limit from collision

wheel load *see* **wheel concentration**

white-way lighting the lighting provided for night illumination along a road or bridge, as distinguished from sign lighting or colored regulatory and warning lights

wide flange a rolled member with an H-shaped cross section with wider flanges and a thinner web than an I-beam

wind bracing the bracing systems in girder and truss spans and in towers and bents that resist the stresses of wind forces

wing wall the retaining-wall extension of an abutment that restrains and holds the side-slope material of an approach causeway or embankment in place

worked rubble *see* **rubble**

working stress the unit stress in a member under service or design load

W-shaped beam wide-flange beam

Bibliography

ACI Code 318-83. *Building Code Requirements for Reinforced Concrete*. American Concrete Institute. Detroit, Michigan. 1986.

AR 415-16. *Army Facilities Components System*. 17 March 1989.

AR 415-28. *Real Property Category Codes*. 10 October 1996.

DA Form 1249. *Bridge Reconnaissance Report*. 1 July 1960.

DA Form 2028. *Recommended Changes to Publications and Blank Forms*. 1 February 1974.

FM 3-19.40. *Military Police Internment/Resettlement Operartions*. 1 August 2001.

FM 5-125. *Rigging Techniques, Procedures, and Applications*. 3 October 1995.

FM 5-134. *Pile Construction*. 18 April 1985.

FM 5-170. *Engineer Reconnaissance*. 5 May 1998.

FM 5-233. *Construction Surveying*. 4 January 1985.

FM 5-250. *Explosives and Demolitions*. 30 July 1998.

FM 5-277. *M2 Bailey Bridge*. 9 May 1986.

FM 5-34. *Engineer Field Data*. 30 August 1999.

FM 5-410. *Military Soils Engineering*. 23 December 1992.

FM 5-412. *Project Management*. 13 June 1994.

FM 5-426. *Carpentry*. 3 October 1995.

FM 5-428. *Concrete and Masonry*. 18 June 1998.

FM 5-430-00-1. *Planning and Design of Roads, Airfields, and Heliports in the Theater of Operations - Road Design*. 26 August 1994.

FM 5-430-00-2. *Planning and Design of Roads, Airfields, and Heliports in the Theater of Operations - Airfield and Heliport Design*. 29 September 1994.

GTA 5-7-12. *Track Commander's Bridge Crossing Booklet*. June 1991.

GTA 5-7-13. *Bridge Classification Booklet*. August 1993.

Introductory Soil Mechanics and Foundations: Geotechnic Engineering. Fourth Edition. Macmillian. ISBN 0-02-413870-3. 1979.

QSTAG 180 (Edition 4). *Civil Bridges (Computation of Bridge, Ferry, Raft, and Vehicle Classifications)*. 27 May 1993.

STANAG 2010 ENGR (Edition 5). *Military Load Classification Markings*. 18 November 1988.

STANAG 2021 ENGR (Edition 5). *Military Computation of Bridge, Ferry, Raft, and Vehicle Classifications*. 18 September 1990.

STANAG 2101 TOP (Edition 10). *Establishing Liaison*. 20 June 2000.

Standard Specifications of Highway Bridges. Thirteenth Edition. American Association of State Highway and Transportation Officials, Incorporated. Washington, DC. 1983.

TC 5-210. *Military Float Bridging Equipment*. 27 December 1988.

TM 5-303. *Army Facilities Components System - Logistics Data and Bills of Materiel*. 1 June 1986.

TM 5-304. *Army Facilities Components System User Guide*. 1 October 1990.

TM 5-5420-203-14. *Operator's, Unit, Direct Support and General Support Maintenance Manual for Bridge, Armored-Vehicle-Launched: Scissoring Type; Aluminum, 60-Ft Span for M-48A5 and M-60 Launcher (all makes and models)*. 3 June 1991.

TM 5-852-1. *Arctic and Subartic Construction - General Provisions*. 4 September 1987.

Index

A

AASHTO, 1-3
AASHTO's Standard Specifications for Highway Bridges, 1-3, 3-1
abutment, 2-1, 2-4, 7-1
accessories, 1-1
AFCS, 1-3, 10-2
A-frame, 4-10
air photos, 2-3
allowable load, 9-2, C-1
  maximum, 9-3
  parallel to the grain, 9-2
  perpendicular to the grain, 9-2
allowable pressure, 9-6
allowable shear stress, 3-20
allowable stress, 3-19, 3-23, 8-15, 9-7
  steel, 3-25
  timber, C-1
allowable vehicle shear, 3-21
American Association of State Highway and Transportation Officials, *see* AASHTO
American Society for Testing and Materials, *see* ASTM
analytical method, 1-4
anchor, 8-16
anchorage, 8-1
AO, 1-5
approach, 2-1
area of operation, *see* AO
Artic and Subartic Environments, 12-1
armored vehicle-launched bridge, *see* AVLB
Army Facilities Components System, *see* AFCS
assembly sites, 2-3
ASTM, 4-14
AVLB, 1-3

B

backhoe, 1-5
backstay slope, 8-3, 8-4
Bailey bridge, 1-3
balanced weld, 9-16
beam
  failure, 6-1
    bearing, 6-1
    bending, 6-1
    lateral deflection, 6-1
    shear, 6-1
    vertical deflection, 6-1
  prestressed, 3-73
bearing, 9-10
  capacity, 2-2, 12-3
  failure, 9-7
  stress, E-3
bending, 11-17
bending moment, 3-17
bents, 2-1, 3-20
bolt spacing, 9-9
bracing, 3-12, 8-7
  knee, 8-7
  sway, 8-7
bridge, 1-1, 8-1, 8-2
  approaches, 5-1
  Bailey, 1-3
  bolt, 3-12
  box-girder, 3-65
  bracing, 3-12
  cantilever truss span, 3-8
  composite-stringer, 3-26
  concrete, 1-1
  concrete-stringer, 2-1
  continuous span, 3-16, 3-17
continuous-span truss, 3-8
curb, 3-12
deck, 3-9
demolished, 1-1, 2-4
expedient, 1-3
fixed, 1-3
floating, 3-13
floor stringer, 3-8
foundations and substructures, 12-4
girder, 3-13
glue-laminated stringer, 3-21
handrail, 3-12
iron, 1-1
M2 Bailey, 4-1
masonry, 4-20
masonry-arch, 3-74, 3-75, 4-17
masonry-arch deck, 4-27
movable, 3-81
  bascule, 3-81
  swing, 3-81
  vertical-lift, 3-81
multiple-span, 8-2
multispan, 3-16
multispan arch, 2-1
nail, 3-12
noncomposite steel-stringer, 3-26
nonengineered, 3-19
reinforced concrete, 3-60
reinforced concrete box-girder, 3-64
ribbon, 1-3
semipermanent, 1-1
signs, 5-1
simple steel, 2-1
simply supported, 3-16

slab, 3-56, 3-60
span, 3-13
steel, 1-1
steel-arch, 3-8
steel-girder, 3-83
stringer, glue-laminated, 3-21
suspension, 2-1, 3-8, 3-82, 3-83, 8-1
T-beam, 3-59, 3-60
timber stringer, 3-18, 3-20
glue-laminated, 3-18
laminated, 3-18
plank, 3-18
truss, 2-1, 3-8, 3-46, 3-49
abutment, 3-48
anchor, 3-48
cantilever, 3-48
deck, 3-48
pier, 3-48
pony, 3-46
through, 3-47
bridge components, 3-11
deck, 3-11
timber decking, 3-11
bridge height, 2-3
bridges
nonstandard fixed, 1-4
standard, 1-3
bridge site, 2-1, 8-2
bridge structure, 2-1
bridging in arctic and subarctic environments, 12-1
bulldozer, 1-5
bypass, 2-1

C

cable, 8-1
cable, suspender, 8-1
cableways, 10-14
calculation
allowable bending stress, 3-15
bending-moment, 3-11
dead load, 3-12, 3-13
live load, 3-13
moment, 3-12
moment capacity, 3-15
shear, 3-12
camber, 8-3, 8-4
capacity, load-carrying, 4-1
cement types, G-2
classification, 1-1, 3-1
concrete, 1-2
correlation-curve method, 3-49
deck, 3-22
dual, 5-2
floor beam, 3-49
live load, 3-55
method, 3-1
moment, 3-16, 3-35, 3-59
procedure, 3-65, 3-74
shear, 3-67
steel, 1-2
stringer, 3-49
suspension, 1-2
timber, 1-2
truss, 3-54
classification examples
composite steel-concrete stringer bridge, F-11
masonry-arch bridge, F-48
prestressed concrete bridge, F-43
reinforced concrete-box-girder bridge, F-39
reinforced concrete-slab bridge, F-31
reinforced concrete T-beam bridge, F-35
steel-girder bridge, F-17
steel-stringer bridge, F-8
timber-stringer bridge, F-4
truss bridge, F-24
combat zone, *see* CZ
composite construction, 3-26, 3-55
compressive stress, E-2
computation, dead-load, 3-49
concealment, 2-2
concrete, 3-15, 3-55, G-1
compressive strength, 6-8
mass-concrete structures, G-4
poststressed, G-8
prestressed, 3-15, G-8
reinforced, 3-26
steel-reinforced, G-4
T-beam, 3-65
connection, 1-1, 4-7, 9-1
bolt, 4-15
reinforcement, 4-12
rivet, 4-15
weld, 4-15
construction, 10-1
composite, 3-55, 3-66
concrete-deck, 3-67
dead load, 3-67
expedient ice-bridge, 12-18
noncomposite, 3-66
precautions, 10-27
scheduling, 10-7
suspension-bridge, 10-29
construction site, 4-1
continuous span bridge, 3-17
conversion charts, A-1
correlation curve, 3-3
correlation method, 3-8
cradle and flare, 8-3, 8-4
cross section, 3-12
curb-to-curb roadway width, 3-50
CZ, 1-4

D

damage, 1-2
dams, 2-2
dead load, 3-12, 3-67, 4-12, 4-20, 7-2, E-1
computation, 3-49
decking, 3-12
moment, 3-15
moment per component, 3-15
span length, 3-15
total per stringer, 3-15
uniformly distributed, 3-15
deadman, 8-20

deck, 1-3
bridge, 3-9
classification, 3-22
clear distance, 6-4
concrete-box-girder, 3-10
concrete on concrete T-beam, 3-10
concrete on steel I-beam stringer, 3-10
concrete on timber stringer, 3-10
design, 6-4
floor stringer, 3-9
glue-laminated, 3-10
laminated, 6-5, 6-6
maintenance, 11-15
nail-laminated, 3-10
plank, 3-10, 6-5, 6-6
prestressed concrete girder, 3-10
reinforced concrete, 6-7
repair, 4-5
required thickness, 6-6
steel arch, 3-9
thickness, 3-22
timber, 6-5
wearing surface, 6-4
decking, 2-2, 3-12
deflection, 4-7
demolished bridge, 1-1, 2-4
demolition, 2-1
derricks, 10-14
design, 1-1, 2-2, 6-4, 8-1, 8-3
abutment procedures, 7-1
criteria, 9-6
allowable stresses, 9-7
allowable tensile, 9-7
bolted connections, 9-6
examples, I-1
steel-stringer bridge with a concrete deck, I-9
timber-stringer bridge with a timber deck, I-3
expedient field, 8-12
factor, 8-3
backstay slope, 8-3, 8-4
camber, 8-3, 8-4
cradle and flare, 8-3, 8-4
sag ratio, 8-3
load, 3-3, 6-1
methods, 1-3
procedures, 7-1, 9-1
process, 6-1
suspension-bridge, 8-1
detours and bypasses, 1-2
diagrams, E-10
moment, E-13, E-18
shear, E-11, E-16
double-story configuration, 1-3
dual classification, 5-2

E

earth pressure, 7-5
effective shear, D-12
effective shear area, 3-20, 3-43
effective span length, 6-4, 6-5
equivalent span length, 3-8, 3-48
examples
classification, F-1
design, I-1
expedient
bridge, 1-3
classification procedure, B-20
crossing, 2-2
field design, 8-12
explosives, 12-3
accessories, 12-3
commercial, 12-3
military, 12-3

F

failure, 1-2
beam, 6-1
mode, 6-1, 9-10
bearing, 9-10
end bearing, 6-1
excessive deflection, 6-1
lateral buckling, 6-1
shear, 9-10
tensile strength, 9-12
falsework, 10-15
bents, 10-15
platforms and scaffolding, 10-15
trestles, 10-15
floor beam, 3-36, 4-11, 8-6
floor-beam reaction, 3-45
floor clips, 9-8
flow, 4-20
footings, 2-3
force
allowable tensile, 3-51
bending, 3-46
compression, 3-46
dead-load shear per stringer, 3-21
horizontal, 4-20
horizontal shear, 3-20
live-load shear capacity, 3-21
moment classification, 3-20
shear capacity, 3-20
shear capacity per stringer, 3-21
tension, 3-46
forces
soil, 7-5
temperature, 7-6
water, 7-6
fords, 1-2, 4-1
foundation, 10-3, 11-17
abutments, 11-17
concrete, 11-18
steel, 11-17
timber, 11-17

G

girder, 1-3, 3-12
continuous-span structure, 3-11
moment classification, 3-31
plate, 3-11
reinforced concrete beam, 3-11
steel, 3-11

grade, 3-19
gravel, 2-6
grillage, 10-9
gross weight, 8-8
guy line, 8-16

H

handrails, 9-1
hanger cable, 3-9
Hankinson formula, 9-2
hasty method, 2-1
hoists, 10-14
horizontal loads, 7-4
hydration, G-2
hydrostatic uplift, 7-4
hypothetical vehicles, B-1

I

impact
  factor, 3-16, 3-35
  load, 8-8, E-1
inspection, 3-12, 11-11
  equipment, 11-12
  items, 11-12
  mission, 11-11
intermediate support, 2-1
internal
  moment, E-10
  reactions, E-8
  shear force, E-9

J

jacks, 10-14

K

knee brace, 4-11, 9-1
knee bracing, 8-7

L

lamination, live-load, 6-6
lanes, 2-2
launching nose, 10-22
layout, 2-3, 10-9
lines of communication, *see* LOC
live load, 3-16, 4-20, 6-6, E-1
  lamination, 6-6
  moment, 3-9, 3-28, 3-35, 3-59
  total moment capacity, 3-16
load, 3-1, 3-3, 7-1
  abutment, 7-1
  capacity, 4-14
  dead, E-1
  design, 3-3, 6-1
  footing, 7-1
  horizontal, 7-4
  impact, 8-8, E-1
  live, 3-16, 4-20, 6-6, E-1
  pile, 7-1
  post, 7-1
  superstructure dead, 7-2
  vertical, 7-1
load-carrying capacity, 1-1
loads, 2-5
LOC, 1-1
locks, 2-2

M

M2 Bailey bridge, 1-3, 4-1
main cable, 8-9
main supply route, *see* MSR
maintenance, deck, 11-15
map
  geologic, 2-3
  topographic, 2-3
maximum allowable load, 9-3
medium-girder bridge, *see* MGB
members, 1-1
method, 3-1
  analytical, 3-1
  analytical load-classification, 3-67
  classification, 3-1
  correlation, 3-8
MGB, 1-3
military load, 1-1
military-load classification, *see* MLC
military occupational specialty, *see* MOS
military operation, 1-1
MLC, 1-3, 3-1, B-1
  one-way, 3-9
  two-way, 3-9
modulus of elasticity, 3-15, 8-15
moisture content, 3-19
moment
  capacity, 3-15, 3-49, 3-55
  classification, 3-16
  dead load, 3-15, 3-16, 3-73
  diagram, E-13, E-18
  internal, E-10
  live-load, 3-9, 3-16, 3-28, 3-35, 3-59
moment classification, 3-35, 3-59
moment classification, girder, 3-31
moment of inertia, D-15
moment stress, E-4
MOS, 1-5
MSR, 11-11

N

NATO, 3-13, 3-18, 5-6, B-1
neutral axis, 3-56, D-12
nonstandard fixed bridges, 1-4
North Atlantic Treaty Organization, *see* NATO

O

obstacle, 2-1, 2-5
OCONUS, 1-4
outside continental US, *see* OCONUS
overhead
  bracing, 3-55
  clearance, 2-1, 2-2, 3-55
overload, 1-2

P

permafrost, 12-1
  excavated foundation, 12-10
  foundation survey, 12-7
  intermediate supports, 12-8
  nonexcavated foundation, 12-11

pile bents, 12-8
picket holdfast, 8-16
pier, 2-4
pile piers, 2-1
plank deck, 6-6
posting, 5-1
prestressed
beam, 3-73
concrete beam, 3-66
profile
rock, 2-4
soil, 2-4, 2-5
properties
concrete, G-1
end-bearing H-piles, D-4
rolled angles, D-6
rolled beams, steel, D-3
rolled channels, D-5
round beams, timber, C-10
soil, H-1
steel stringers, D-9
unequal-leg angles, D-7

R

radius of gyration, D-19
railroad, 2-3
reconnaissance, 1-1, 2-1, 3-49, 10-1
deliberate, 2-1
hasty, 2-1
reinforced concrete slab, 3-55
reinforcement, 1-1, 4-1
abutment, G-8
beam, G-4
bypass, 4-1
column, G-6
compression member, 4-13
detour, 4-1
footing, G-6
intermediate support, 4-12
load capacity, 4-14
retaining-wall, G-8
slab-deck, G-5
stringer, 4-9
tension members, 4-15
trestle bent, 4-8
truss, 4-11, 4-14
repair, 1-1, 4-4
abutment, 4-18
A-frame, 4-10
damaged member, 4-17
debris, 4-18
deck, 4-5
flooring, 4-17
footing, 4-6, 4-10
knee brace, 4-11
masonry-arch bridge, 4-20
masonry pier, 4-18
noncontinuous stringer, 4-7
pier failure, 4-6
shear, 4-7
substructure, 4-10
superstructure, 4-6
timber pier, 4-6
truss, 4-11
required deck thickness, 6-6
retaining wall, 12-12
ribbon bridge, 1-3
river-crossing operation, 1-3
road, curb-to-curb roadway width, 3-50
road network, 1-1
rolled shapes, 3-22

S

saddle, 8-16
safety factor, 8-8, C-1
sag ratio, 8-3
sand, 2-6
scheduling, 10-6
scheduling, construction, 10-7
scour, 3-11, 4-6, 11-17
section modulus, 3-15, 3-22, D-17
semipermanent bridge, 1-1
settlement, 3-11
shear, 3-67, 9-10
shear diagram, E-11, E-16
shear force, internal, E-9
shear stress, E-4
signs, 5-2
bridge, 5-1
bridge-classification, 5-1
North Atlantic Treaty Organization, *see* NATO
rectangular, 5-4
temporary, 5-3
simply supported, 3-16
slab, reinforced concrete, 3-55
slenderness ratio, 4-15
soil, 3-11, 7-3, H-1
forces, 7-3
properties, 2-5
sample, 2-3
spacing, 9-7
bolt, 9-7, 9-9
span, 2-2, 8-1
bending moment, 3-17
continuous, 3-17
length, 3-3, 3-9
effective, 6-4, 6-5
equivalent, 3-8
special equipment, 10-13
species, 3-19
standard, 1-3
Standard Specifications for Highway Bridges, AASHTO's, 1-3, 3-1
static equilibrium, E-6
steel, 2-3, 3-15, D-1
connections, 9-10
end-bearing H-piles, D-4
high-strength, D-1
reinforcing, 3-57
reinforcing bar, 3-55, D-5
reinforcing yield strength, 6-9
rolled angles, D-6
rolled beams, D-3
rolled channels, D-5
stringers, D-9
unequal-leg angle, D-7
yield strength, 3-57
stream, 4-20

stress, E-1
allowable, 8-15
allowable bending, 3-26
allowable horizontal-shear, 3-20
bearing, 3-15, E-3
compressive, E-2
deflection, 3-15
moment, E-4
shear, E-4
stresses, 1-5, 9-1
stresses, allowable, 9-7
stringer, 2-2, 2-4, 3-8, 3-12, 3-13
effective, 3-14
effective number, 3-21
steel, 3-22, 3-55,
timber, 3-13
vehicular loading, 3-12
structural mechanics, E-1
structure, bridge, 1-1
substructure, 1-1, 3-10, 3-11, 7-1, 9-1, 10-1
subsurface, 2-6
superstructure, 1-1, 1-3, 3-10, 3-11, 3-83, 10-1
abutment weight, 7-3
connections, 3-11
dead load, 7-2
superstructure design, I-1
support
bearing plate, 3-12
roller, 3-12
suspenders, 8-8
suspenders, cable, 8-1
sway bracing, 8-7

T

tactical bridging, 2-1
T-beam, concrete, 3-65
TCMS, 1-4
temperature forces, 7-6
tensile strength, 9-12
test pits, 2-5
Theater Construction Management System, *see* TCMS
theater of operations, *see* TO
tie rod, 4-21, 4-22
I-beam, 4-22
pier, 4-22
steel plate, 4-22
timber, 2-3, 2-6, 3-15, 4-17, C-1
allowable loads, C-1
allowable stresses, C-1
connections, 9-1
bolts, 9-1, 9-3
fastener, 9-1
nails, 9-1
spikes, 9-1
load direction, C-1
grade, C-1
properties
rectangular beams, C-9
round beams, C-10
select structural grade, C-1
solid-sawn, 3-20
species, C-1
strength, C-1
timber deck, 3-22, 6-5
laminated, 3-22
plank, 3-22
TO, 1-1, 5-2
tools and equipment, 10-10
hand tools, 10-13
towers, 8-1, 8-13
traffic controls, 5-5
truss, 3-12
inverted king, 4-9
inverted queen, 4-9
reinforcement and repair, 4-11

W

washers, 9-7
washers, bearing failure, 9-7
water forces, 7-6
wearing surface, 4-17
welding process, 9-12
electric-arc, 9-12
oxyacetylene, 9-12
welds, 9-12
weld types, 9-13
butt weld, 9-13
fillet weld, 9-15
wing wall, 4-18

Y

yield point, 3-15
yield strength, 3-57, 6-9
yield strength, steel, 3-23

FM 3-34.343 (FM 5-44)
12 FEBRUARY 2002

By Order of the Secretary of the Army:

ERIC K. SHINSEKI
General, United States Army
Chief of Staff

Official:

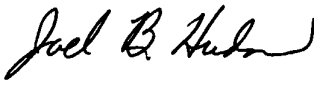

JOEL B. HUDSON
Administrative Assistant to the
Secretary of the Army
0204301

DISTRIBUTION:

Active Army, Army National Guard, and US Army Reserve: To be distributed in accordance with the initial distribution number 114374, requirements for FM 3-34.343.